SONY

VIDEOCORDER
VIDEOCORDER
MAGNETOSCOPE VIDEO

BVH-1100APS

OPERATION AND MAINTENANCE MANUAL
BEDIENUNGS- UND WARTUNGSANLEITUNG
MODE D'EMPLOI ET D'ENTRETIEN

Volume 2 2nd Edition (Revised 1)
Serial No. 20001 to 20699

CONFIDENTIAL

The material contained in this manual consists of information that is the property of Sony Corporation and is intended solely for use by the purchasers of the equipment described in this manual.
Sony Corporation expressly prohibits the duplication of any portion of this manual or the use thereof for any purpose other than the operation or maintenance of the equipment described in this manual without the express written permission of Sony Corporation.

VERTRAULICH

Das in dieser Anleitung enthaltene Material besteht aus Informationen, die Eigentum der Sony Corporation sind, und ausschließlich zum Gebrauch durch den Käufer der in dieser Anleitung beschriebenen Ausrüstung bestimmt sind.
Die Sony Corporation untersagt ausdrücklich die Vervielfältigung jeglicher Teile dieser Anleitung oder den Gebrauch derselben für irgendeinen anderen Zweck als die Bedienung oder Wartung der in dieser Anleitung beschriebenen Ausrüstung ohne ausdrückliche schriftliche Erlaubnis der Sony Corporation.

CONFIDENTIEL

Le matériel contenu dans ce manuel consiste en informations qui sont la propriété de Sony Corporation et sont destinées exclusivement à l'usage des acquéreurs de l'équipement décrit dans ce manuel.
Sony Corporation interdit formellement la copie de quelque partie que ce soit de ce manuel ou son emploi pour tout autre but que des opérations ou entretiens de l'équipment à moins d'une permission écrite de Sony Corporation.

TABLE OF CONTENTS
INHALTSVERZEICHNIS
TABLE DES MATIERES

Volume 1.

1. OPERATION

BEDIENUNG

FONCTIONNEMENT

5. REPLACEMENT

5-1. Replacement of Upper Drum Assembly 5-1
5-2. Replacement of Head Drum Assembly 5-2
5-3. Replacement of Audio/CTL Head 5-3
5-4. Replacement of Audio Erase Head 5-3
5-5. Replacement of Full Erase Head 5-3
5-6. Reel Table Replacement 5-3
5-7. Replacement of Tension Arm 5-4
5-7-1. Replacement of Tension Arm Assembly 5-4
5-7-2. Tension Arm Adjustment 5-4
5-8. Photocoupler Replacement 5-6
5-9. Brush and Slip Ring Replacement 5-6

6. REEL SYSTEM ALIGNMENT

6-1. Reel Table Height Adjustment 6-1
6-2. Brake Band Gap Adjustment 6-1
6-3. Brake Release Adjustment 6-2
6-4. Brake Solenoid Stroke Adjustment 6-2
6-5. Take-Up Reel Table Brake Torque Adjustment 6-3
6-5-1. "From F. FWD to Stop Mode" Parking Brake Torque Adjustment 6-3
6-5-2. "From REV to Stop Mode" Parking Brake Torque Adjustment 6-3
6-6. Supply Reel Table Brake Torque Adjustment 6-4
6-6-1. "From REV to Stop Mode" Parking Brake Torque Adjustment 6-4
6-6-2. "From F. FWD to Stop Mode" Parking Brake Torque Adjustment 6-4
6-7. Reel Motor Torque Adjustment 6-4
6-8. Reel Motor Photo-Coupler Position Adjustment 6-8

7. TENSION SYSTEM ALIGNMENT

7-1. Supply Air-Damper Adjustment 7-1
7-2. Take-Up Air Damper Adjustment 7-2
7-3. Tension Detector Adjustment 7-3

8. CAPSTAN SYSTEM ALIGNMENT

8-1. Pinch Roller Slant Adjustment 8-1
8-2. Pinch Solenoid Stroke Adjustment 8-2
8-3. Tape Advance Power Adjustment 8-2
8-4. Pinch Lever Stopper Position Adjustment 8-3

9. DRUM SYSTEM ALIGNMENT

9-1. Upper Drum Eccentricity Adjustment 9-1
9-2. Pulse Generator Phase Adjustment 9-2
9-3. Record Test 9-4

10. TAPE RUN ALIGNMENT

10-1. Audio Head Position Adjustment 10-1
10-2. End Sensor Position Adjustment 10-1
10-3. Tracking Adjustment 10-2
10-3-1. Tracking Check 10-2
10-3-2. Tracking Adjustment 10-3
10-3-3. Overlap Adjustment 10-5
10-4. Audio Head Height Adjustment 10-7
10-5. Audio Phase Adjustment 10-8
10-6. Audio Erase Head Height Adjustment 10-9
10-7. Audio/CTL Head Position Adjustment 10-10

Volume 2.

2. CAUTION AND OTHER INFORMATION
— To the service technician —

2-1. Precaution 2-1
2-2. Preriminary Explanation 2-2
2-3. Panel Removal 2-4
2-4. Printed Circuit Board Location 2-7
2-5. Measurement Tools and Fixtures 2-9
2-6. Tape Format 2-13

4. PERIODIC CHECK AND MAINTENANCE

4-1. Cleaning 4-1
4-2. System Control Checks 4-1
4-2-1. Play Back, FF and REW 4-1
4-2-2. Programmed Jog 4-2
4-2-3. Record Function 4-2
4-2-4. Auto Edit Function Check 4-3
4-3. Degaussing of The Rotary Head & Stationary Head . . . 4-4
4-4. Record Current Optimization 4-4
4-5. Tracking Check 4-4
4-6. Head-Tips Projection Check 4-4
4-7. Tension Detector Check 4-6
4-8. Cleaning of Slip-Rings and Brushes 4-6

19. DT SYSTEM ALIGNMENT

19-1. Preparation for Alignment 19-1
19-2. DT-2 Board Alignment 19-2
19-3. DT-1 Board Alignment 19-3

20. BLOCK DIAGRAM

20-1. Video System Overall 20-1
20-2. DT-1 Board 20-5
20-3. DT-2 Board 20-7

21. SCHEMATIC DIAGRAM AND BOARD LAYOUT

AUDIO LOGIC Board
Board Layout 21-3
Schematic 21-5
AUDIO-1 & 2 Board
Board Layout 21-9
Schematic 21-11
AUDIO-3 Board
Board Layout 21-15
Schematic 21-17
AUDIO-4 Board
Board Layout 21-19 (3/7)
Schematic 21-19 (5/7)
BD & REG-4 Boards
Board Layout 21-22
Schematic 21-23
BIAS Board
Board Layout 21-25
Schematic 21-27
CAPSTAN-A Board
Board Layout (FORMER) . . . . . 21-29(3/7)
Schematic (FORMER) . . . . . 21-29(5/7)
Board Layout (NEW) 21-31
Schematic (NEW) 21-33
DEMOD Board
Board Layout (FORMER) . . . . . 21-35(3/7)
Schematic (FORMER) . . . . . 21-35(5/7)
Board Layout (NEW) 21-37
Schematic (NEW) 21-39
DISPLAY Board
Board Layout 21-42
Schematic 21-45
DRUM Board
Board Layout 21-47
Schematic 21-49
DT-1 Board
Board Layout (FORMER) . . . . . 21-51(3/7)
Schematic (FORMER) . . . . . 21-51(5/7)
Board Layout (NEW) 21-53
Schematic (NEW) 21-55
DT-2 Board
Board Layout 21-57
Schematic 21-59
FRAMING-A Board
Board Layout (FORMER) . . . . . 21-61(3/7)
Schematic (FORMER) . . . . . 21-61(5/7)
Board Layout (NEW) 21-63
Schematic (NEW) 21-65
LINE OUT Board
Board Layout 21-69
Schematic 21-71
MOD Board
Board Layout (FORMER) . . . . . 21-73(3/7)
Schematic (FORMER) . . . . . 21-73(5/7)
Board Layout (NEW) 21-75
Schematic (NEW) 21-77
MOTHER-1A Board
Board Layout (FORMER) 21-81
Board Layout (NEW) 21-83
MOTHER-2 Board
Board Layout 21-85
MPA-A Board
Board Layout (FORMER) 21-88
Board Layout (NEW) 21-89
Schematic 21-91
PLUNGER-A Board
Board Layout (FORMER) 21-93
Board Layout (NEW) 21-93
Schematic 21-95
REC AMP Board
Board Layout 21-97
Schematic 21-99
REEL-1A Board
Board Layout (FORMER) . . . . . 21-101(3/7)
Schematic (FORMER) . . . . . 21-101(5/7)
Board Layout (NEW) 21-103
Schematic (NEW) 21-105
REEL-2A Board
Board Layout (FORMER) . . . . . 21-107(3/7)
Schematic (FORMER) . . . . . 21-107(5/7)
Board Layout (NEW) 21-109
Schematic (NEW) 21-111
REEL AUX-A Board
Board Layout 21-115
Schematic 21-117
REG-1A Board
Board Layout (FORMER) 21-119
Board Layout (NEW) 21-119
Schematic 21-121
REG-2 Board
Board Layout (FORMER) 21-123
Board Layout (NEW) 21-123
Schematic 21-125
REG-3A Board
Board Layout 21-127
Schematic 21-129
RF EQ-1 Board
Board Layout 21-131
Schematic 21-133
RF EQ-2 Board
Board Layout 21-135
Schematic 21-137
RF SW Board
Board Layout (FORMER) 21-139
Board Layout (NEW) 21-140
Schematic 21-141
SYNC PULSE Board
Board Layout (FORMER) 21-143
Schematic (FORMER) 21-145
Board Layout (NEW) . . . . . 21-147(3/7)
Schematic (NEW) . . . . . 21-147(5/7)
SYS-1 Board
Board Layout (FORMER) 21-148
Board Layout (NEW) 21-149
Schematic 21-151

SYS-2 Board
Board Layout 21-155
Schematic 21-157
SYS-3A Board
Board Layout (FORMER) 21-161
Schematic (FORMER) 21-163
Board Layout (NEW) . . . . . 21-165(3/7)
Schematic (NEW) . . . . . 21-165(5/7)
SYS SW-1 Board
Board Layout 21-166
Schematic 21-169
SYS SW-2A Board
Board Layout (FORMER) . . . . . 21-171(2/7)
Schematic (FORMER) . . . . . 21-171(5/7)
Board Layout (NEW) 21-172
Schematic (NEW) 21-175
SYS SW-3A Board
Board Layout (FORMER) 21-178
Board Layout (NEW) 21-178
Schematic 21-181
SYS SW-4 Board
Board Layout 21-185
Schematic 21-187
SYS SW-5 Board
Board Layout 21-189
Schematic 21-191
TAPE TIMER-A Board
Board Layout 21-193
Schematic 21-195
TENSION-A Board
Board Layout (FORMER) . . . . . 21-197(3/7)
Schematic (FORMER) . . . . . 21-197(5/7)
Board Layout (NEW) 21-199
Schematic (NEW) 21-201
VIDEO LOGIC Board
Board Layout (FORMER) . . . . . 21-203(3/7)
Schematic (FORMER) . . . . . 21-203(5/7)
Board Layout (NEW) 21-205
Schematic (NEW) 21-207
Frame Wiring; Tape Transport Block 21-213
A4 AUX Board
AUDIO AUX Board
COUPLER-A Board
COUPLER-SA Board
COUPLER-T Board
Frame wiring; Power Supply Block 21-216
AC-A Board
Frame Wiring; Function Control Block 21-219
Frame Wiring; Level Control Block 21-224
AUDIO SELECT Board
WFM SELECT Board
Frame Wiring; Video Connector Panel Block 21-228
BUFFER Board
Frame Wiring; Head Drum Ass'y Block 21-233
DRM-1 Board
DRM-4 Board

22. SEMICONDUCTOR ELECTRODES

23. SPARE PARTS AND TEST FIXTURE

Parts Information 23-1
Rack Cover Assembly 23-3
Tape Transport Front Panel Assembly 23-5
Tape Transport Side Panel Assembly 23-7
Control Panel Assembly 23-10
Level Control Assembly 23-13
Function Control Assembly 23-15
Connector Panel Assembly 23-17
Head Drum Assembly 23-19
Stationary Head Assembly 23-21
Supply Capstan Assembly 23-23
Take-Up Capstan Assembly 23-25
Reel Table Assembly 23-27
Tension Arm Assembly 23-29
Sub Control Block Assembly 23-31
Base Chassis Frame Assembly 23-33
Base Chassis Rear Assembly 23-35
Amp Chassis Assembly 23-37
Power Supply Assembly 23-39
PWB Shield Plate Assembly 23-41

NOTES FOR PARTS LIST 23-45

AC-A Board 23-47
ARM-LED Board 23-47
ARM-POT Board 23-47
AUDIO-1 & 2 Board 23-47
AUDIO-3 Board 23-49
AUDIO-4 Board 23-50
A4-AUX Board 23-51
AUDIO AUX Board 23-52
AUDIO LOGIC Board 23-53
AUDIO SELECT Board 23-54
BD Board 23-55
BIAS Board 23-56
BUFFER Board 23-57
CAPSTAN-A Board 23-58
COUPLER-A Board 23-60
COUPLER-SA Board 23-61
COUPLER-T Board 23-61
DEMOD Board 23-65
DISPLAY Board 23-66
DRM-1 Board 23-67
DRM-4 Board 23-68
DRUM Board 23-69
DT-1 Board 23-70
DT-2 Board 23-72
FEH-1 Board 23-75
FRAMING-A Board 23-75
LAMP Board 23-76
LINE AMP Board 23-76
LINE OUT Board 23-77
MOD Board 23-81
MOTHER-1A Board 23-83
MOTHER-2 Board 23-83
MPA-A Board 23-84
PLUNGER-A Board 23-86
REC AMP Board 23-86
REEL AUX-A Board 23-88
REEL-1A Board 23-89

REEL-2A Board 23-92
REG-1A Board 23-96
REG-2 Board 23-96
REG-3A Board 23-97
REG-4 Board 23-98
RF EQ-1 Board 23-99
RF EQ-2 Board 23-100
RF SW Board 23-101
RPH-1 Board 23-103
RPH-2 Board 23-103
SE-1 Board 23-103
SE-2 Board 23-103
SRC-3 Board 23-103
SUB CONTROL Board 23-104
SYNC PULSE Board 23-104
SYS-1 Board 23-106
SYS-2 Board 23-107
SYS-3A Board 23-108
SYS SW-1 Board 23-109
SYS SW-2A Board 23-111
SYS SW-3A Board 23-112
SYS SW-4 Board 23-113
SYS SW-5 Board 23-114
TAPE TIMER-A Board 23-115
TC Board 23-116
TENSION-A Board 23-117
VIDEO LOGIC Board 23-119
WFM SELECT Board 23-120
FRAME 23-121
PACKING MATERIAL & SUPPLIED ACCESSORY . . 23-126
FIXTURE (OPTIONAL) 23-126

Changed Parts
#20101 & up Appendix-1
#20201 & up Appendix-4
#20301 & up Appendix-6
#20401 & up Appendix-7
#20501 & up Appendix-9
#20601 & up Appendix-10

SECTION 2
CAUTION AND OTHER INFORMATION

2-1. PRECAUTION

① *Wind the tape two or three turns around the take-up reel, being careful not to fold over the end of the tape. If the end of the tape is folded over, the tape may catch between the slant guide and the upper drum.*

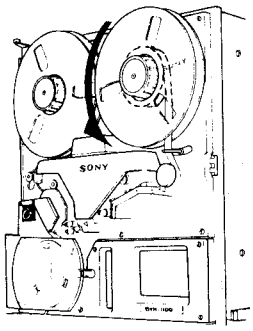

② *If the tape catches between the slant guide and upper drum, remove the upper drum and remove the tape catches.*

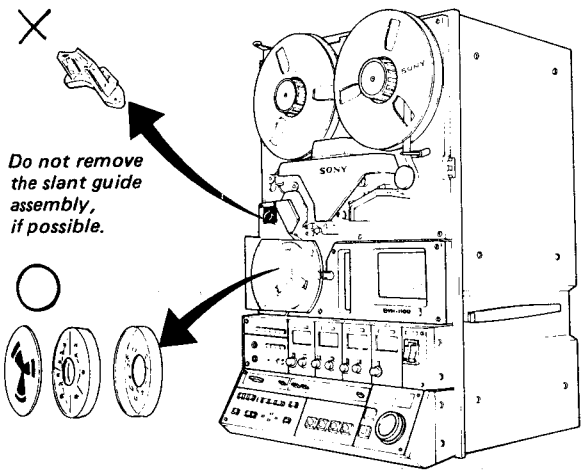

Note: *After reinstalling the upper drum, perform the checks and adjustments in the flowchart in Section 5-1.*

③ *Cut off any tape which is wrinkled or scratched on it.*

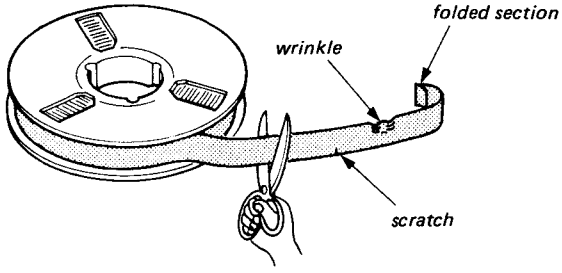

④ *Cut off about one meter (40 inches) of the new tape or the new alignment tape so that there is no chance that the adhesive put on the end of the tape will clog the head.*

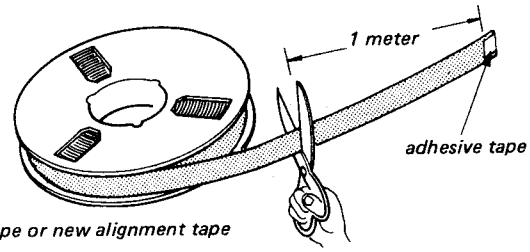

⑤ *Do not turn off the power while the tape is running, only turn off the power after setting the machine in the "STOP" mode.*

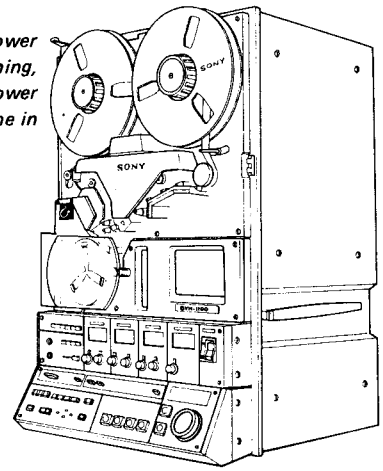

⑥ *Be sure to turn off the power before removing or inserting a connector.*

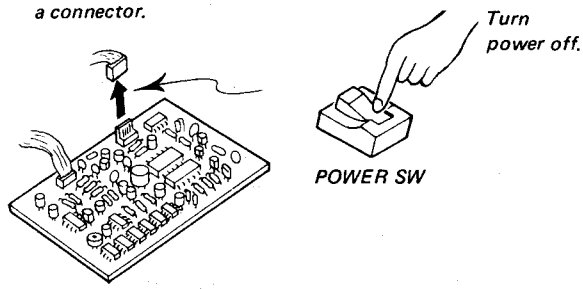

⑦ *A single head on the upper drum cannot be replaced by itself, even if it is the only head that needs replacement. Replace the whole upper drum assembly in such a case.*

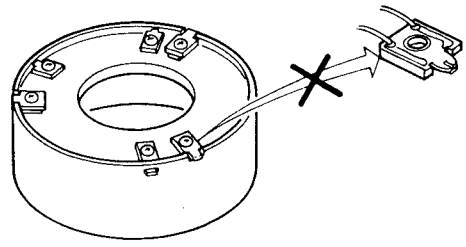

2-2. PRELIMINARY EXPLANATION

1. To operate the machine without threading tape

The machine is designed not to function without threading tape. However the machine can be controled by performing the following procedure.

① *Put an opaque tape over the end sensor that there is between the drum and the "S" side capstan.*

Note: *If the "T" reel panel has been removed, the machine can also be controled by removing the connector CN344 on the Coupler Board.*

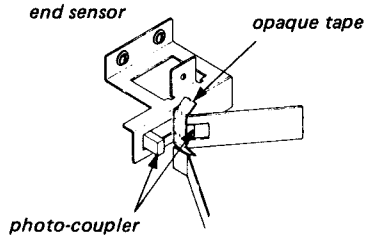

② *Short between TP1 and TP2 on the REEL-1A Board.*

Note: After adjustment, remove the opaque tape. If the connector CN344 had been removed, connect it again.

Fig. 2-1. To function machine without threading tape

2. To match the source power line voltage and frequency

Before using the machine, match the power voltage and frequency with supplied power.

To obtain the proper line voltage:

Remove the voltage selector cover and make sure the correct voltage are viewed through the window on the voltage selector cover.

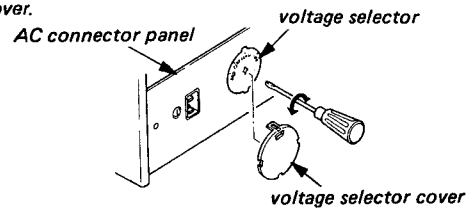

To obtain the proper line frequency:

Make sure the frequency select switch on the REEL AUX-A Board is set to the power line frequency used.

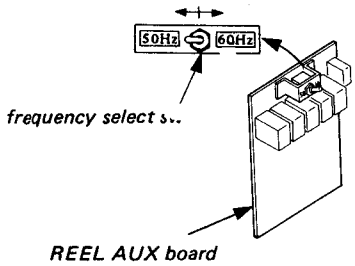

Note: *If the power line is changed, adjust the reel motor torque, referring to the Section 6-7.*

Fig. 2-2. Power line voltage and frequency change

3. Alarm Function

A. STOP button lamp blinks:

The following two cases are the cause of this blinking.

(1) When the machine is placed in REC or PLAYBACK mode, and SERVO LOCK switch is set to the EXT. REF. position, and no signal feeds to EXT. REF. Input on the Video Connector panel.

(2) When the machine is in REC mode or PLAYBACK mode, the SERVO LOCK switch is set to the AUTO position, and no signal feeds to both "EXT. REF, INPUT" and "VIDEO INPUT" on the Video Connector panel.

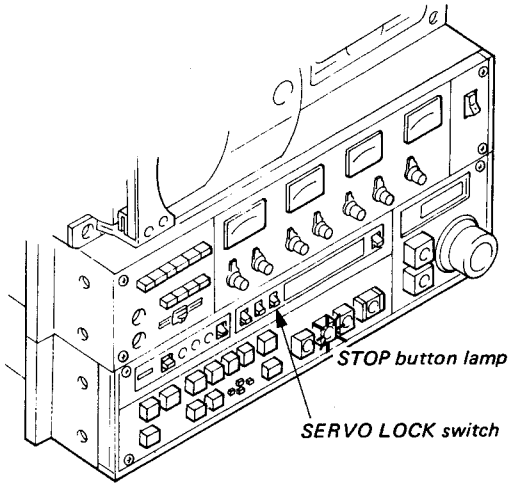

Note: *1. If the STOP button lamp blinks, only Search F.FWD and REV modes can be functioned.*

2. If the STOP button lamp of the SLAVE machine blinks while two or more machines are operated in parallel, the REMOTE function of the MASTER machine cannot operate correctly.

Fig. 2-3. STOP button lamp blinks

B. STANDBY button lamp blinks:

The following two cases are the cause of this blinking.

(1) Even if the STANDBY button is pushed, the drum does not start, since the tape sticks to the drum surface by the condensation on the drum.

(2) The drum speed is less than 2/3 of the specification since the tape tension rises abnormally.

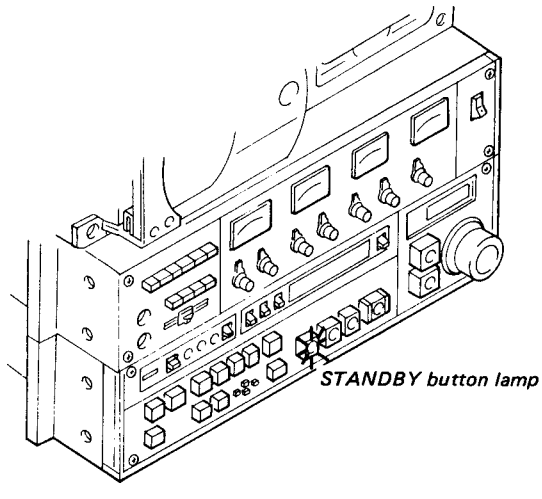

Note: *If the STANDBY button lamp blinks, no function can operate.*

Fig. 2-4. STANDBY button lamp blinks

C. AUTO STOP lamp blinks:

The following two cases are the cause of this blinking.

(1) Temperature of the "S" or "T" reel motor rises and the sensor senses abnormal temperature.
(In this case, the machine is set in the STOP mode.)

(2) The temperature of the power block rises and the thermal relay on the heat sink in the regulator senses the abnormal temperature.
(In this case, the machine mode is not changed.)

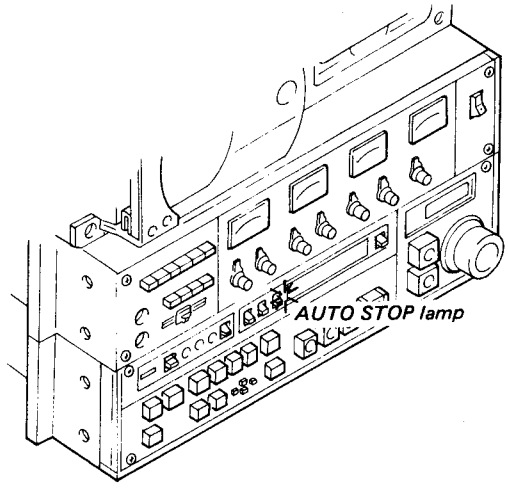

Note: *Even if the AUTO STOP lamp blinks and all function can be operated, you should place the machine in the STOP mode as soon as possible, and check to see that the cooler fan in the power block functions.*

Fig. 2-5. AUTO STOP lamp blinks

4. To adjust the SYS-3A Board by using the Extension Board

The signal at the connection pin 30B on the SYS-3A Board is TENSION RELEASE signal. However, the 30B on the Extension Board is ground level, therefore the tension release function cannot work while the SYS-3A Board is extended by the Extension Board even if the tape is stoped in the STANDBY mode.

Note: Do not repeat to place the machine many times in the STANDBY mode, since the heads may clog if the machine places in the STANDBY mode for a long time during the SYS-3A Board adjustment.

2-3. PANEL REMOVAL

1. To remove front panels

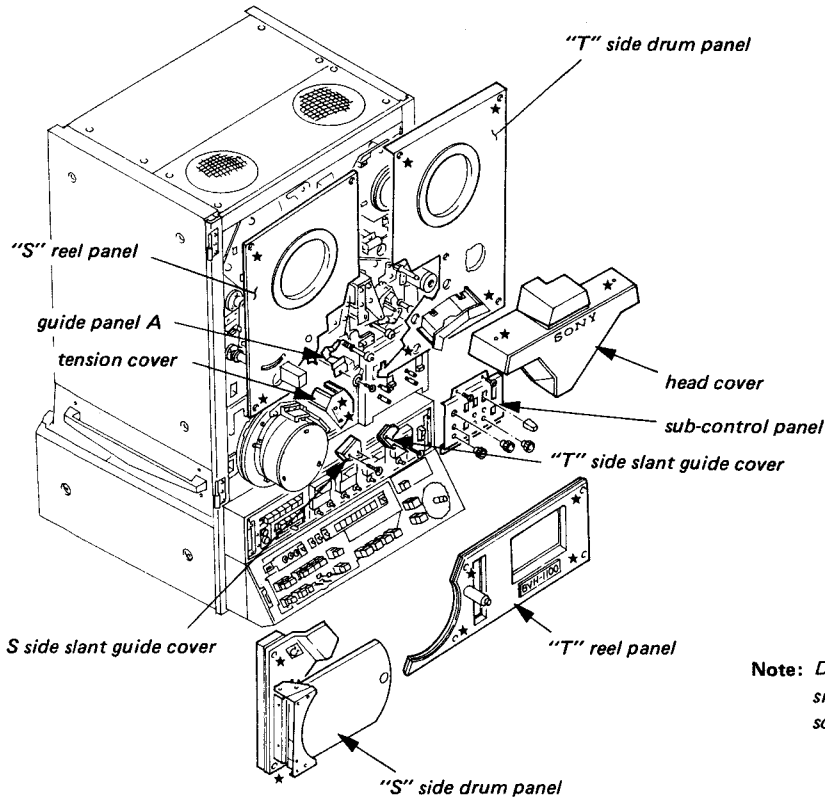

Note: *Do not remove the asterisked screw forcibly, since the screw stopper is attached to each screw.*

Fig. 2-6. Front panel removal

2. To remove control panels

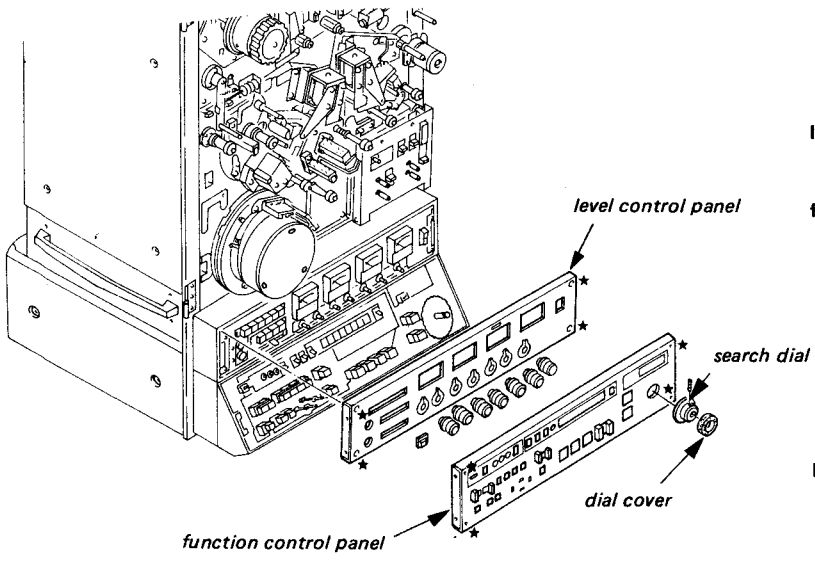

level control panel removal:
Remove the knob and loosen the four asterisked screws.

function control panel removal:
Remove the dial cover, loosen the set screw securing the search dial and then remove the search dial. Loosen the four asterisked screws.

Note: *Do not remove the asterisked screws forcibly, since screw stopper is attached to each screw.*

Fig. 2-7. Control panel removal

3. Side panel removal

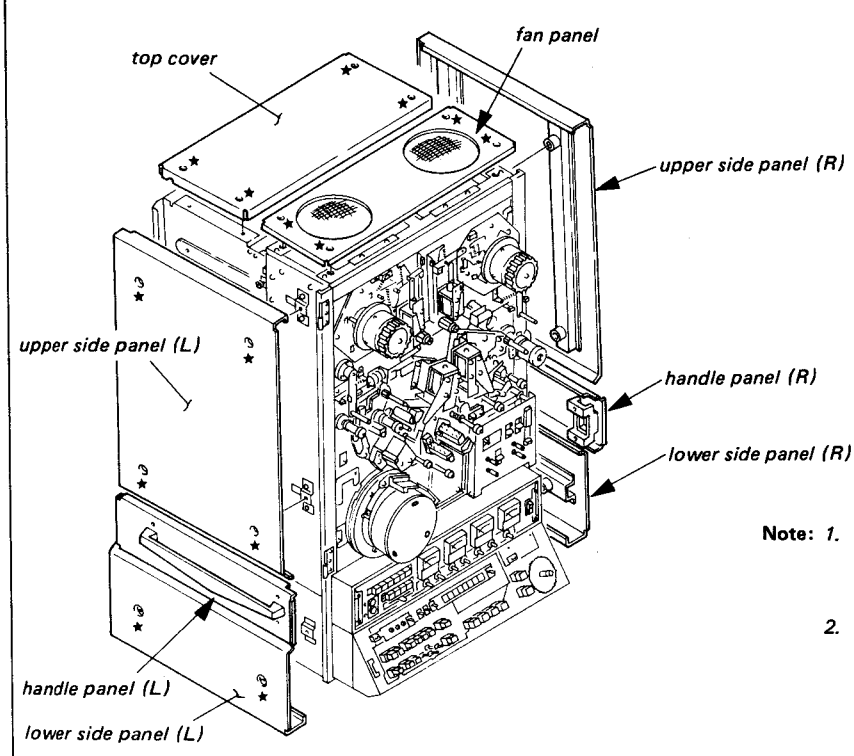

Note: 1. *Do not remove the asterisked screws forcibly, since screw stopper is attached to each screw.*

2. *For normal maintenance, it is usually unnecessary to remove the handle panels or lower side panels.*

Fig. 2-8.

4. Level control chassis removal

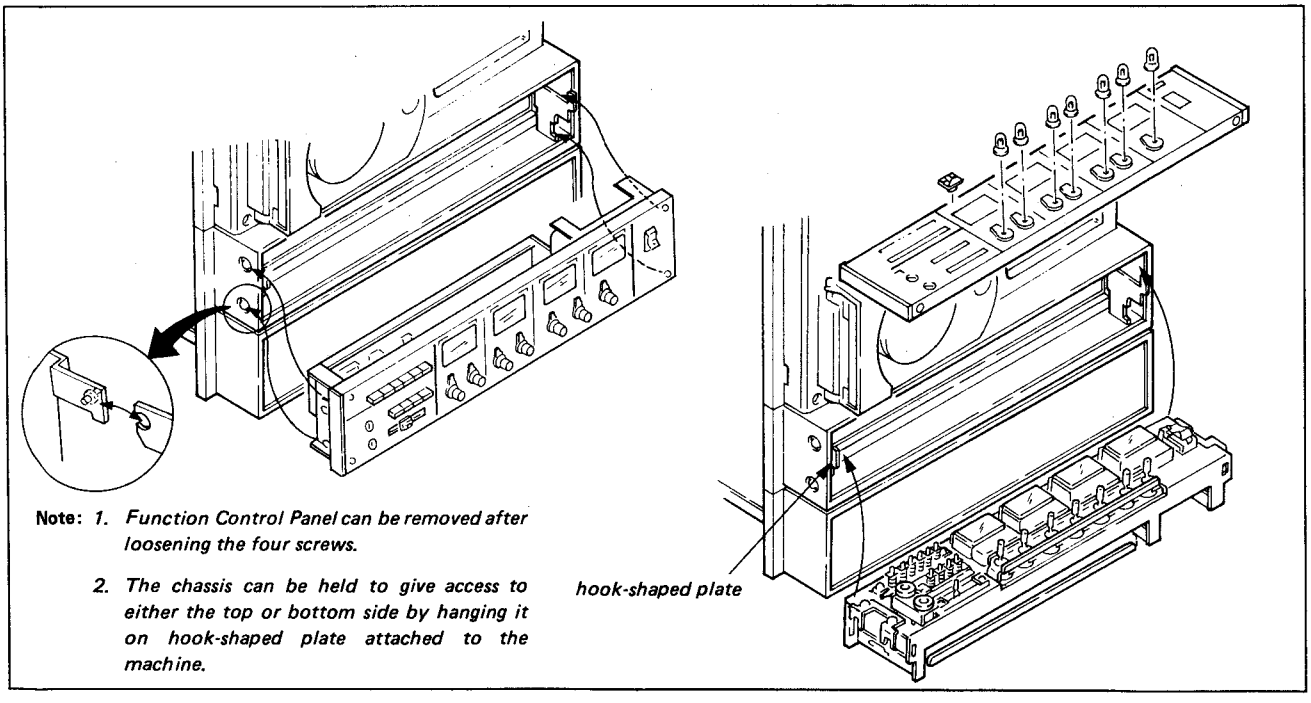

Note: 1. *Function Control Panel can be removed after loosening the four screws.*

2. *The chassis can be held to give access to either the top or bottom side by hanging it on hook-shaped plate attached to the machine.*

Fig. 2-9

5. Function control removal

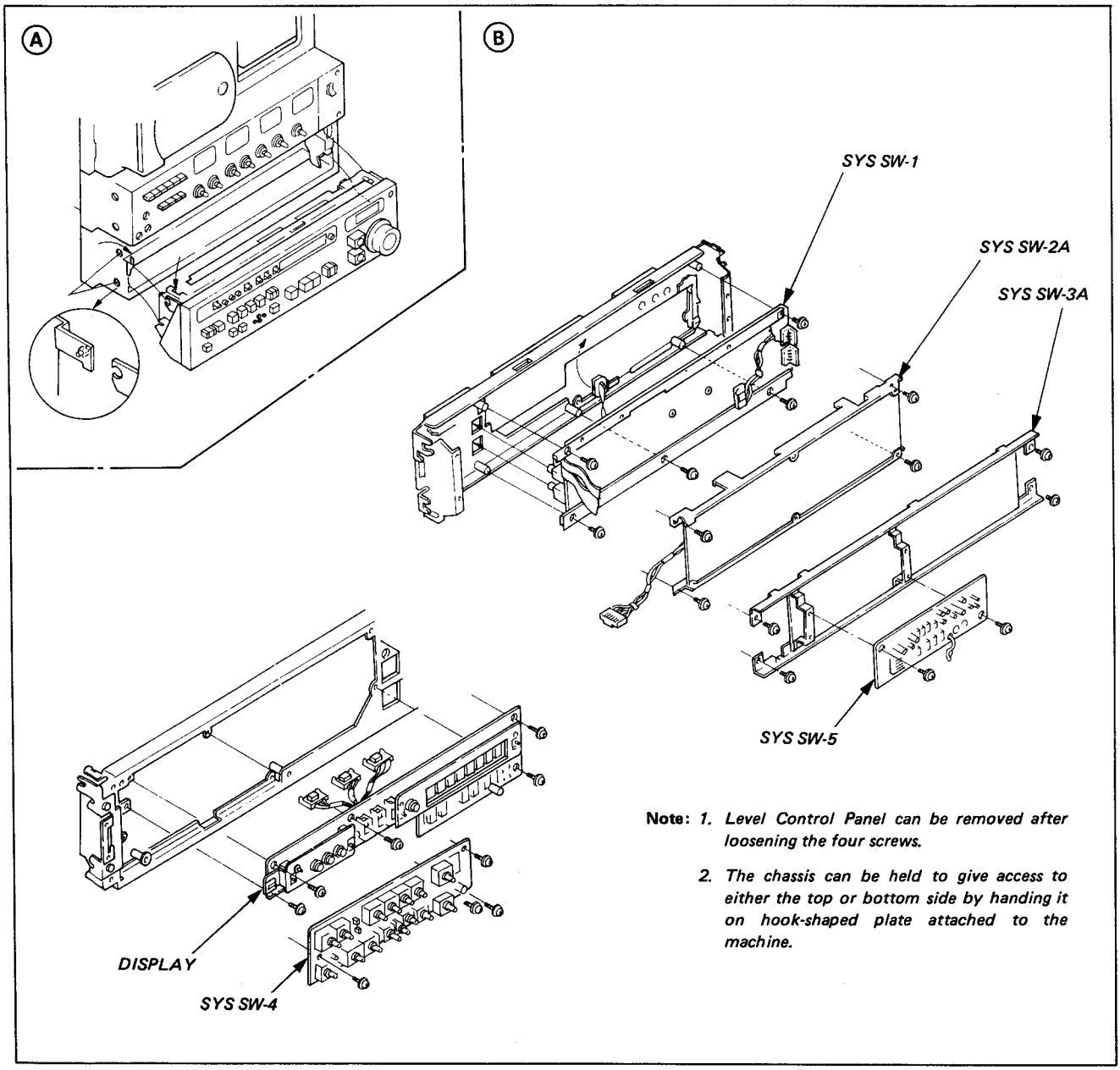

Note: *1. Level Control Panel can be removed after loosening the four screws.*

2. The chassis can be held to give access to either the top or bottom side by handing it on hook-shaped plate attached to the machine.

Fig. 2-10

2-4. PRINTED CIRCUIT BOARD LOCATION

1. Tape Transport, Front View

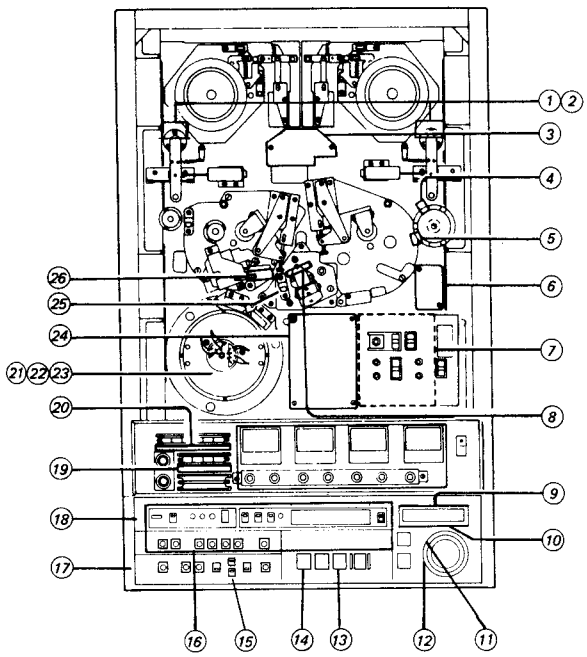

① *ARM-POT (Into the tension arm)*
② *ARM-LED (Into the tension arm)*
③ *PLUNGER-A*
④ *SE-2 (Into the counter roller)*
⑤ *SE-2 (Into the counter roller)*
⑥ *COUPLER-A*
⑦ *SUB-CONTROL*
⑧ *RPH-1*
⑨ *LAMP*
⑩ *SE-1 (Into the search controller)*
⑪ *SE-1 (Into the search controller)*
⑫ *SE-1 (Into the search controller)*
⑬ *SYS-SW-1*
⑭ *SYS-SW-2A*
⑮ *SYS-SW-3A*
⑯ *DISPLAY*
⑰ *SYS-SW-4*
⑱ *SYS-SW-5*
⑲ *AUDIO SELECT*
⑳ *WFM SELECT*
㉑ *DRM-1 (Into the upper drum)*
㉒ *DRM-2 (Into the upper drum)*
㉓ *DRM-3 (Into the upper drum)*
㉔ *RF-SW*
㉕ *CEH-2*
㉖ *SE-1 (Into the end sensor)*

2. Tape Transport, Rear View

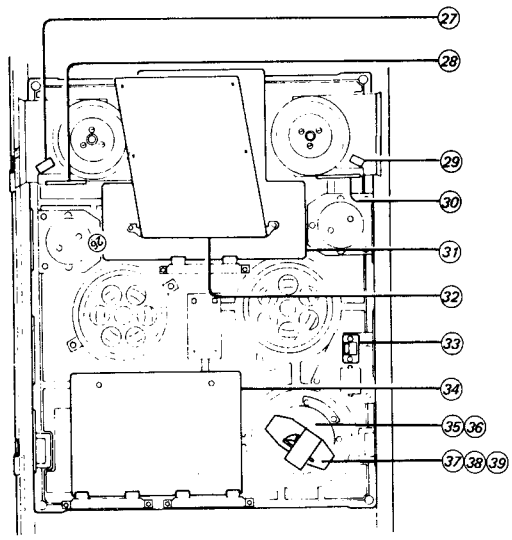

㉗ *SE-2*
㉘ *COUPLER-T*
㉙ *SE-2*
㉚ *COUPLER-SA*
㉛ *MPA-A*
㉜ *REEL AUX-A*
㉝ *TC*
㉞ *REC AMP*
㉟ *DRM-4 (Into the head drum assembly)*
㊱ *DRM-5 (Into the head drum assembly)*
㊲ *SRC-1*
㊳ *SRC-2*
㊴ *SRC-3*

3. Amp Chassis

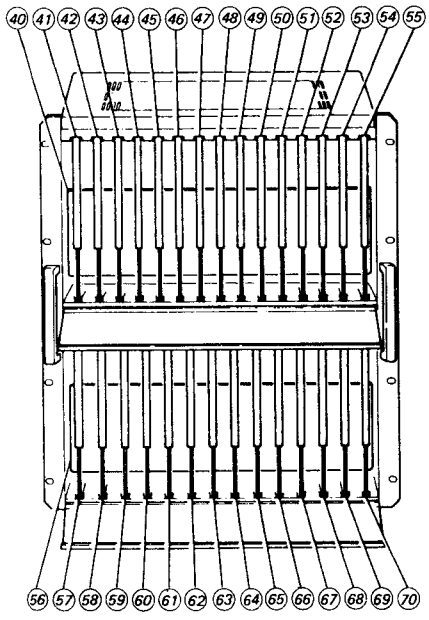

- 40 MOTHER-1A
- 41 TIME CODE-1 (option)
- 42 TIME CODE-2 (option)
- 43 TAPE TIMER-A
- 44 SYS-1
- 45 SYS-2
- 46 SYS-3A
- 47 REEL-1A
- 48 REEL-2A
- 49 AUD LOGIC
- 50 VID LOGIC
- 51 SYNC PULSE
- 52 DRUM
- 53 FRAMING-A
- 54 CAPSTAN-A
- 55 TENSION-A
- 56 MOTHER-2
- 57 (SPARE)
- 58 BIAS
- 59 AUDIO-3
- 60 AUDIO-1 & 2
- 61 LINE OUT
- 62 AUTO CHROMA (option)
- 63 RF EQ-1
- 64 RF EQ-2
- 65 DEMOD
- 66 MOD
- 67 COLOR-1 (option)
- 68 COLOR-2 (option)
- 69 DT-1 or COLOR-3 (option)
- 70 DT-2 or COLOR-4 (option)

4. Power Chassis

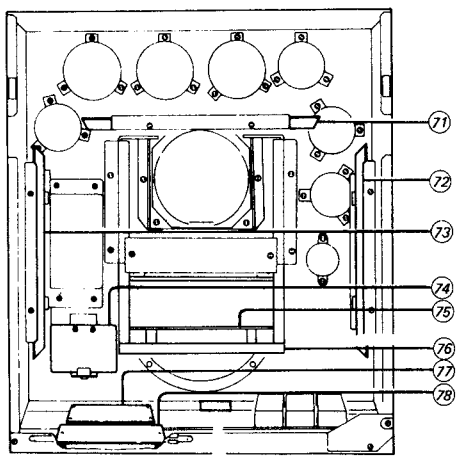

- 71 REG-1A
- 72 REG-3A
- 73 REG-2
- 74 AC-A
- 75 BD
- 76 REG-4
- 77 AUDIO AUX
- 78 BUFFER

2-5. MEASUREMENT TOOLS AND FIXTURES

- *J-6040-070-A*
- *eccentric driver*
- *audio/CTL head position adj.*

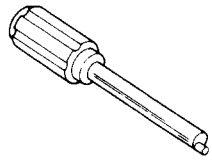

- *J-6040-160-A*
- *flat plate*
- *pinch roller slant and audio head slant adj.*

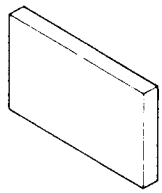

- *J-6040-310-A*
- *tension scale (500 grams)*

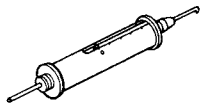

- *J-6040-320-A*
- *tension adjustment fixture*
- *tape tension adj.*

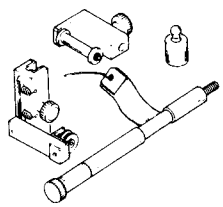

- *J-6040-460-A*
- *tapered screw*
- *upper drum position adj.*

- *J-6040-750-B*
- *drum eccentricity adjustment fixture*
- *head tip projection adj. and upper drum eccentricity adj.*

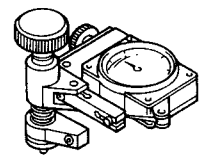

- *J-6041-630-A*
- *tension scale (200 grams)*
- *reel brake torque adj.*

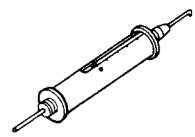

- *J-6041-640-A*
- *tension scale (5,000 grams)*
- *pinch roller pressure adj.*

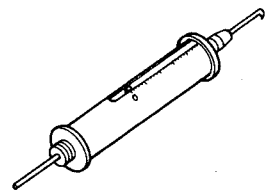

- *J-6041-650-A*
- *tension arm bending fixture*
- *tension arm adj.*

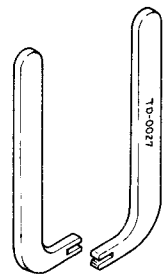

- *J-6041-670-A*
- *thickness gauge*
- *overlap adj.*

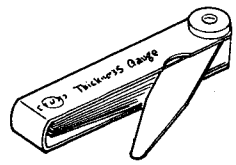

- *J-6041-700-A*
- *Allen wrench set*

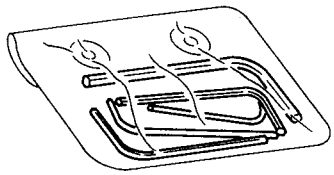

- *8-944-005-02 (BR5-2)*
  8-944-005-12 (BR5-2PM)
  8-944-005-62 (BR5-2PS-A4)
- *alignment tape*

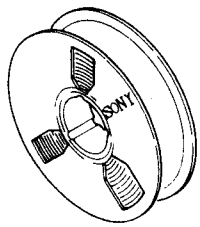

- *R1-9V (N) (commercially available)*
- *empty reel*
- *reel motor torque adj.*

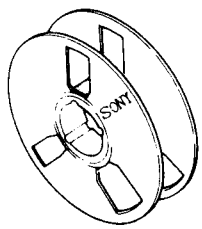

- *SONY HE-2 or HE-3 (commercially available)*
- *demagnetizer*

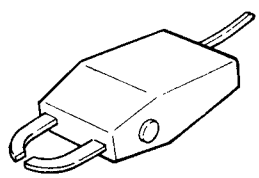

- *7-732-050-01*
- *gauge (20 grams)*
- *tension arm adj.*

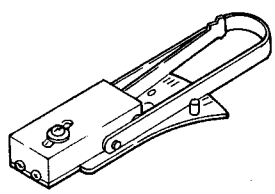

- *7-741-100-01*
- *weight (200 grams)*
- *reel motor torque adj.*

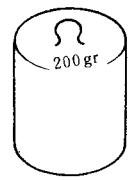

2-6. TAPE FORMAT

BVH-1100, -1100A, -1100PM, -1100APM

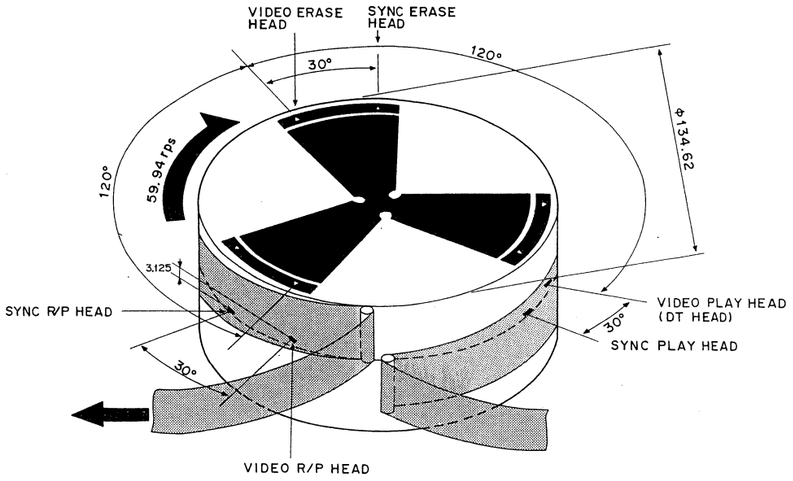

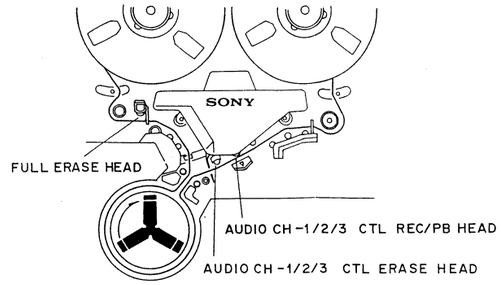

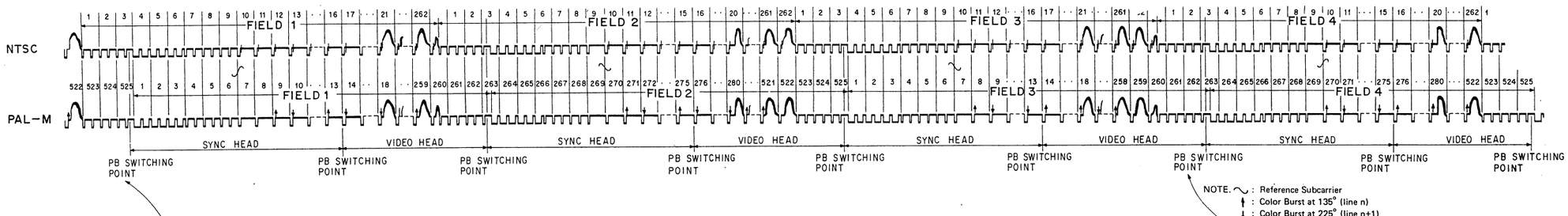

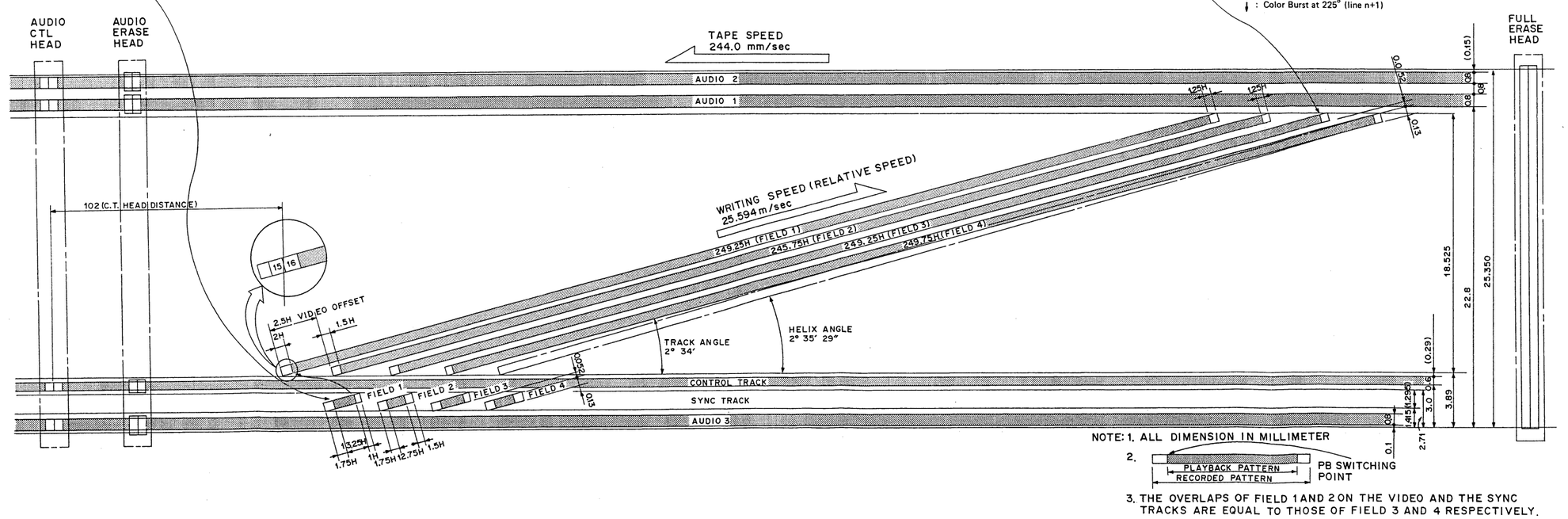

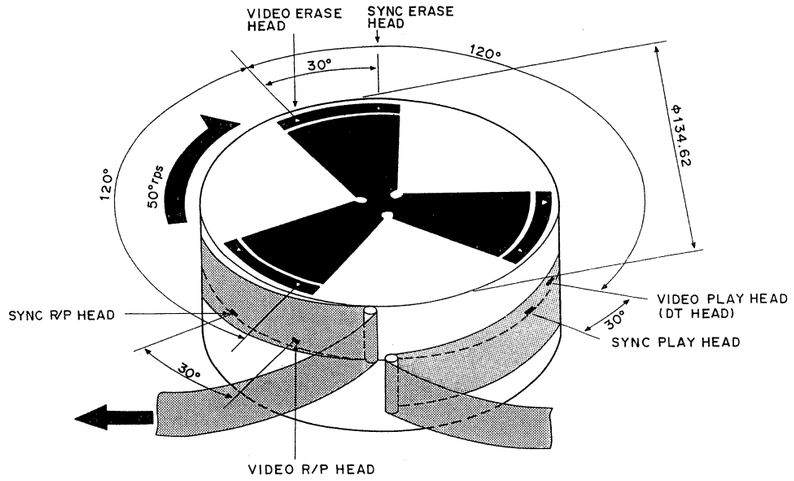
VIDEO ERASE HEAD
SYNC ERASE HEAD
30°
120°
120°
50°rps
φ134.62
SYNC R/P HEAD
VIDEO PLAY HEAD (DT HEAD)
30°
SYNC PLAY HEAD
30°
VIDEO R/P HEAD

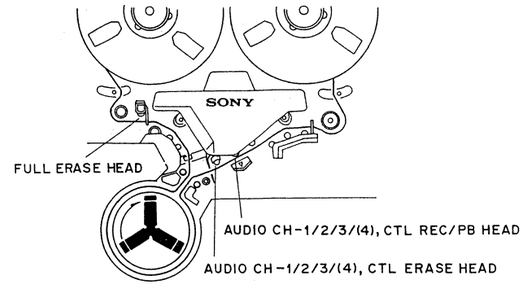
SONY
FULL ERASE HEAD
AUDIO CH-1/2/3/(4), CTL REC/PB HEAD
AUDIO CH-1/2/3/(4), CTL ERASE HEAD

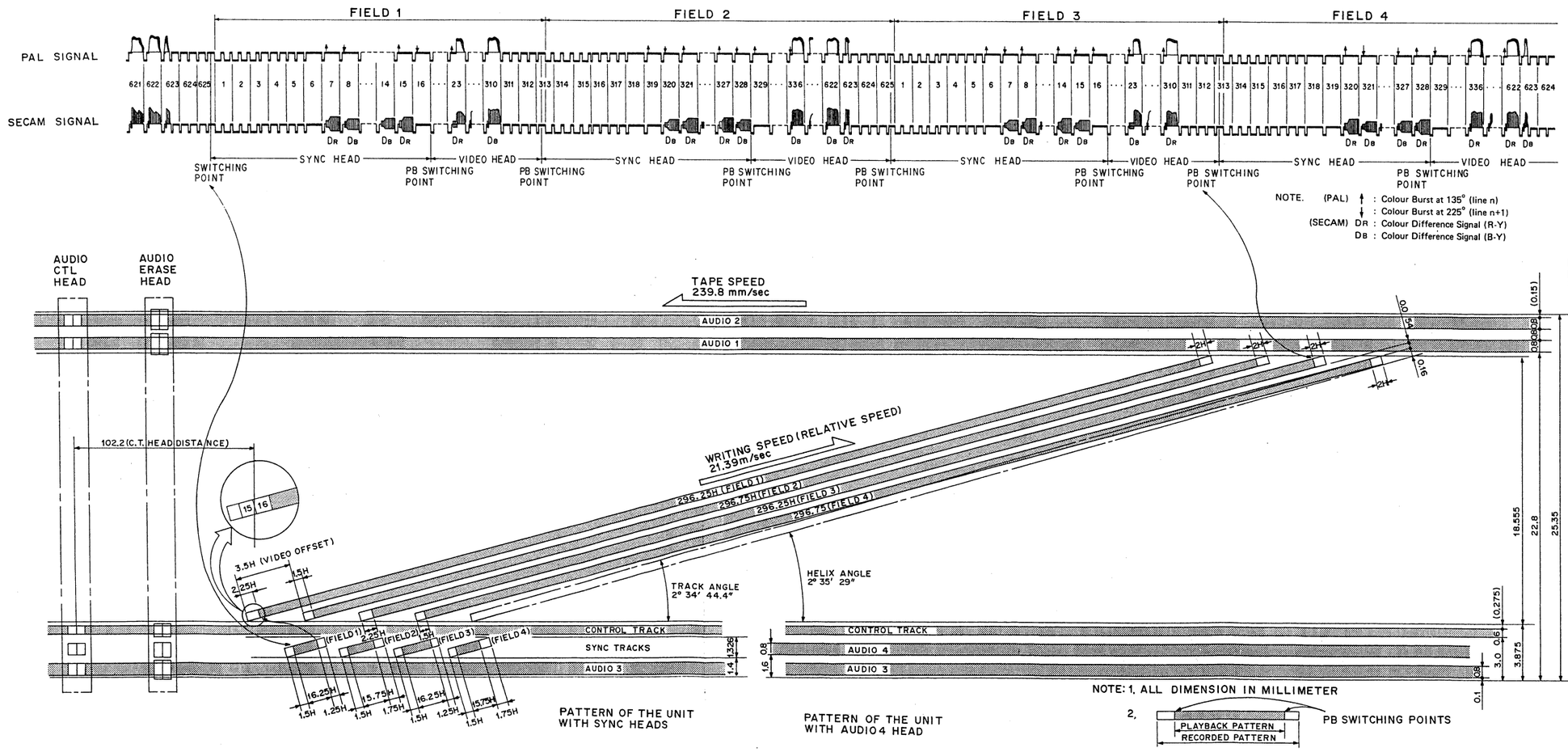
FIELD 1
FIELD 2
FIELD 3
FIELD 4
PAL SIGNAL
SECAM SIGNAL
SYNC HEAD
VIDEO HEAD
SWITCHING POINT
PB SWITCHING POINT
NOTE. (PAL) : Colour Burst at 135° (line n)
: Colour Burst at 225° (line n+1)
(SECAM) DR : Colour Difference Signal (R-Y)
DB : Colour Difference Signal (B-Y)
AUDIO CTL HEAD
AUDIO ERASE HEAD
TAPE SPEED 239.8 mm/sec
AUDIO 2
AUDIO 1
FULL ERASE HEAD
102.2(C.T. HEAD DISTANCE)
WRITING SPEED (RELATIVE SPEED) 21.39m/sec
296.25H (FIELD 1)
296.75H (FIELD 2)
296.25H (FIELD 3)
296.75 (FIELD 4)
3.5H (VIDEO OFFSET)
TRACK ANGLE 2° 34' 44.4"
HELIX ANGLE 2° 35' 29"
CONTROL TRACK
SYNC TRACKS
AUDIO 3
AUDIO 4
PATTERN OF THE UNIT WITH SYNC HEADS
PATTERN OF THE UNIT WITH AUDIO4 HEAD
NOTE: 1. ALL DIMENSION IN MILLIMETER
2. PB SWITCHING POINTS
PLAYBACK PATTERN
RECORDED PATTERN

SECTION 4
PERIODIC CHECK AND MAINTENANCE

It is recommended that the following Periodic Check and Maintenance schedule be adopted the maximum performance and longer tape life from the BVH-1100A.

Time	Maintenance step
Daily	(4-1) Cleaning of Video (R/P and PLAY), Sync (R/P and PLAY) and Rotary Erase Heads, stationary Heads, Tape Guides, and Head Drum Assembly etc. (4-2) System Control Operation Check. (4-3) Degaussing of the Rotary Heads and Stationary Heads when using as the playback machine. (4-4) Record Current Optimization.
Every 250 Hours	(4-5) Tracking Check.
Every 500 Hours	(4-6) Head Tip Projection Check (4-7) Tension Detector Check
as required	(4-8) Cleaning of Slip Rings and Brushes
Every 1500 Hours	(5-9) Replacement of Slip-rings and Brushes

4-1. CLEANING

- With the power off, clean the surface of all the tape transport that contacts the tape, in the tape path such as the Capstan Shafts, Pinch Rollers, Tension Arms, Tape Guides, Guide Flanges of Slant Guide Ass'y Stationary Heads, Head Drum Assembly and Rotary Heads with cleaning piece moistened with cleaning fluid.
- When using a cleaning piece, do not try to clean the rotary heads with the motor running. Press the cleaning piece moistened with cleaning fluid to the rotary heads lightly. Clean the rotary heads from side to side and never clean them vertically.

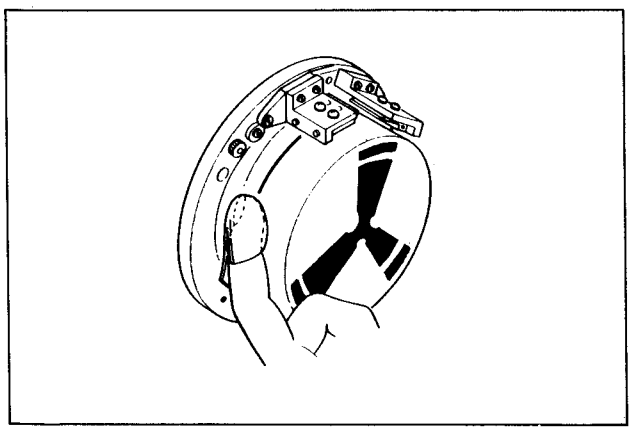

Fig. 4-1. Cleaning rotary head (power off mode)

4-2. SYSTEM CONTROL CHECKS

4-2-1. Play Back, FF and REW

Thread a recorded tape (Video, Audio 1, 2, 3) and check for correct playback, FF and REW operation by following procedure.

sw	function mode (push or turn the following button)	check mode
	SHUTTLE	
	Turn the SEARCH DIAL in the fully clockwise direction (↻)	..... Full FF mode
	STOP	..... STOP mode
Zero Memory Timer-1 SW: ON Timer-1 Reset SW: ON	PLAY	..... PB mode (Video, Audio 1, 2, 3)
	SHUTTLE	..... STILL mode
	Turn the SEARCH DIAL in the clockwise direction (↻)	..... FWD SEARCH mode
	Turn the SEARCH DIAL in the counter-clockwise direction (↺)	..... REV SEARCH mode
	JOG	
	Turn the SEARCH DIAL in the clockwise direction (↻)	..... FWD JOG mode
	Turn the SEARCH DIAL in the counter-clockwise direction (↺)	..... REV JOG mode
	SHUTTLE	
	Turn the SEARCH DIAL in the fully counter-clockwise (↺)	..... Full REW mode
	Indicate the counter 0.00.00.00. point	..... Auto STOP mode

4-2-2. Programmed Jog

Thread a recorded tape (Video, Audio 1, 2, 3) onto the BVH-1100A, and check for proper Programed Jog Operation by following the procedure below.

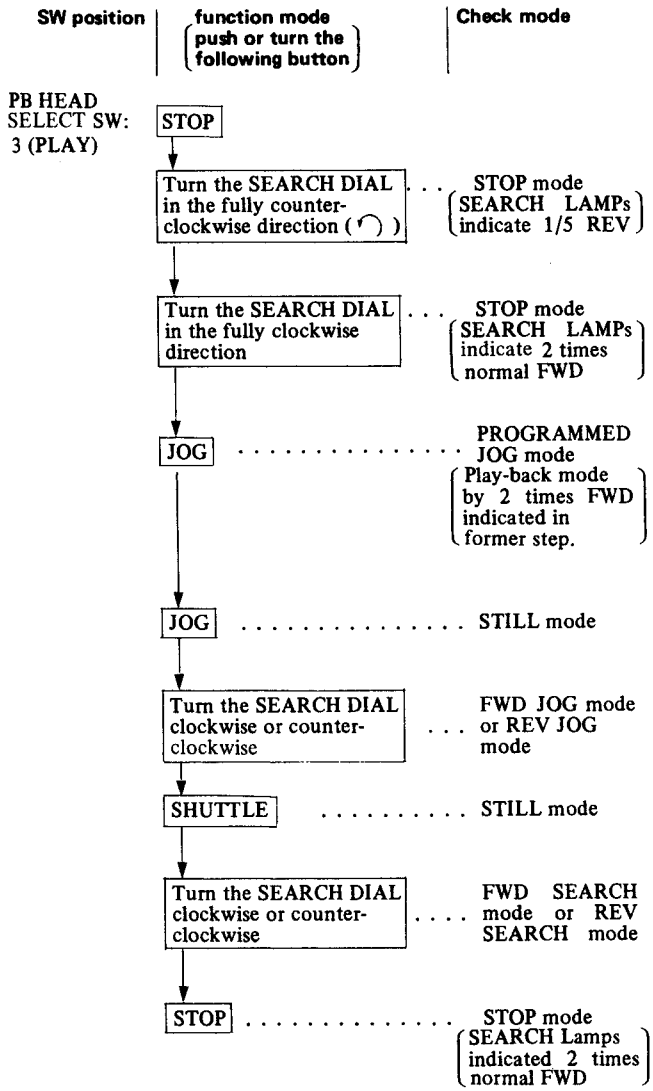

4-2-3. Record Function

Thread a blank tape. Apply the Video, Audio 1, 2 signals, and check for correct recording operation by following the procedure below.

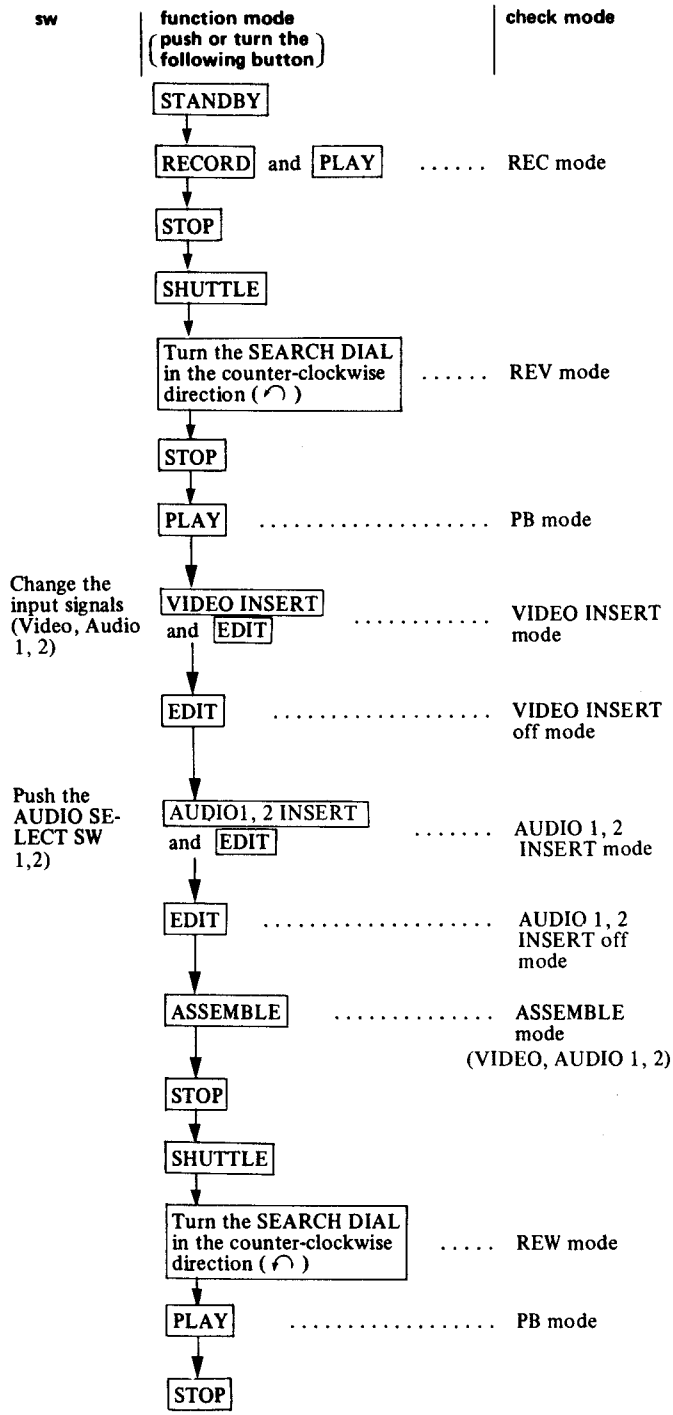

4-2-4. Auto Edit Function Check

(i) Thread a recorded tape. Feed the each Video, Audio 1 and Audio 2 signal to the BVH-1100A. Check that the automatic assemble function in the AUTO EDIT mode are correct by following the procedure below.

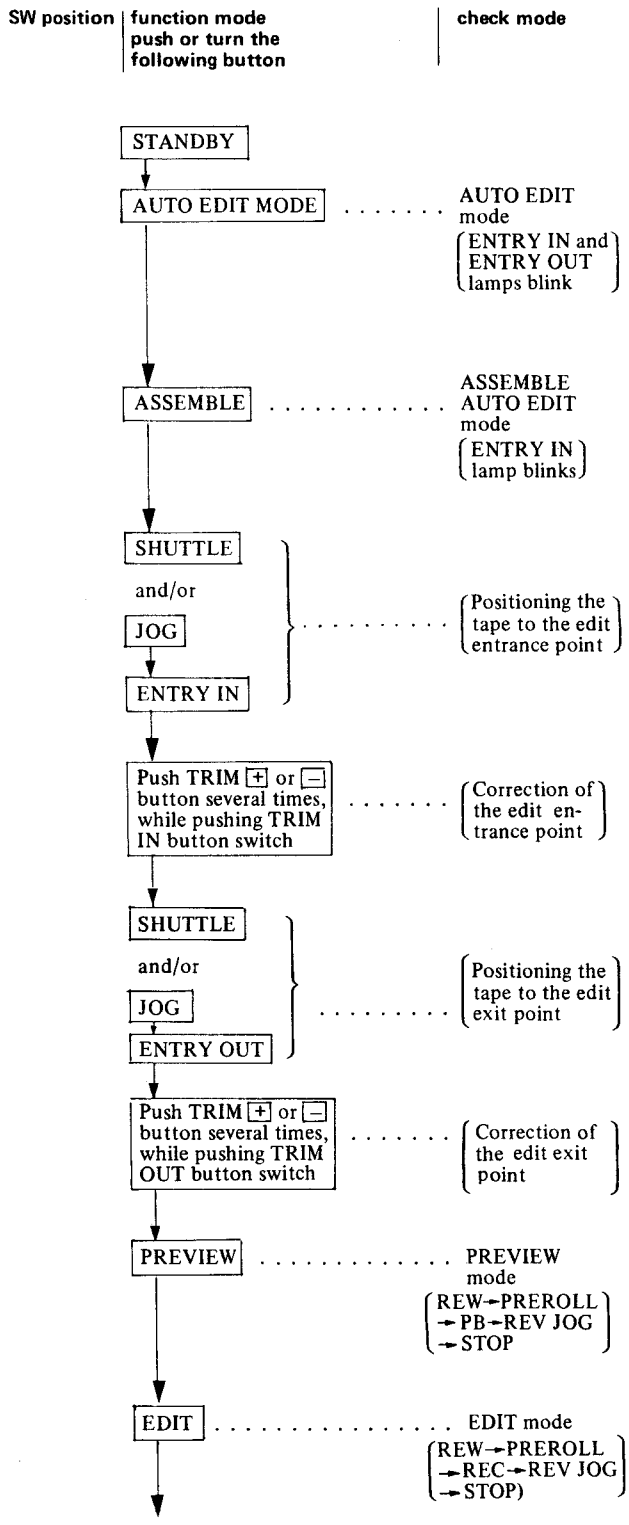

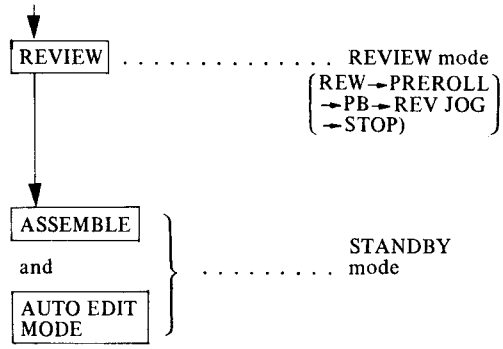

(ii) Thread a recorded tape. Feed the each Video, Audio 1, and Audio 2 signal to BVH-1100A. Check that the automatic insert functions in the AUTO EDIT mode are correct by following procedure below.

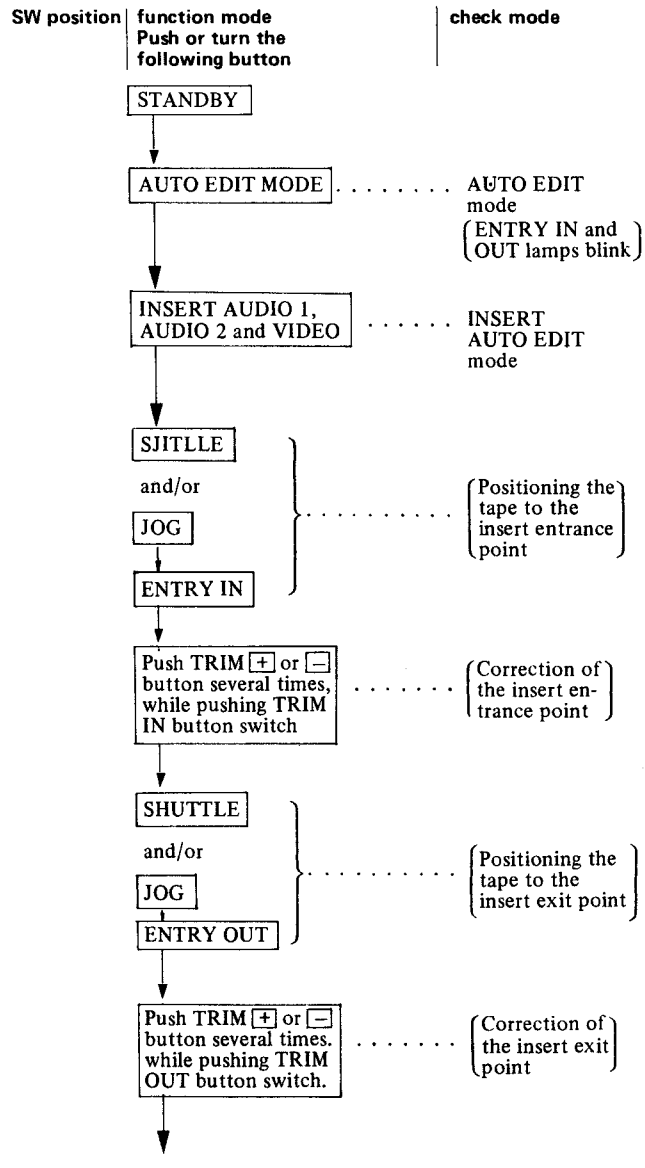

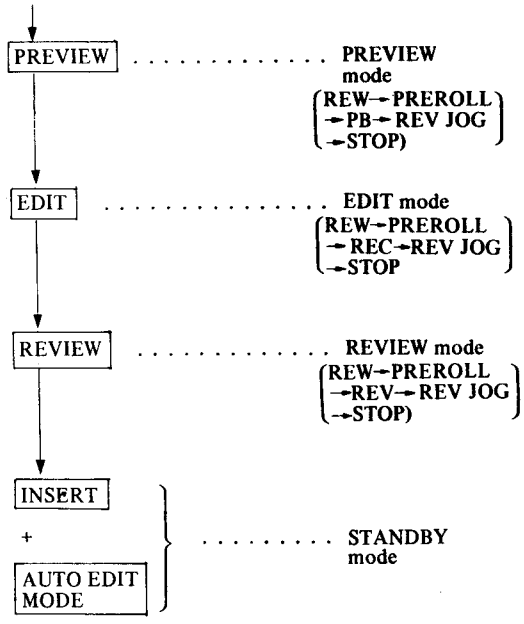

4-3. DEGAUSSING OF THE ROTARY HEAD & STATIONARY HEAD

- **Demagnetize Rotary Head & Stationary Head with** demagnetizer (SONY demagnetizer HE-2 or HE-3). Bring the tip of the demagnetizer as close as possible to the head tip without actually contacting it. Withdraw the demagnetizer very slowly and turn off demagnetizer when it is at least three feet away from the deck (Fig. 4-2).

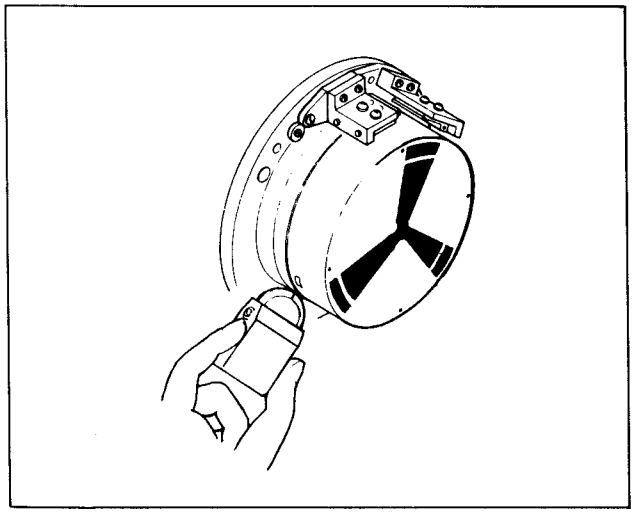

Fig. 4-2. Degaussing of the head with demagnetizer

4-4. RECORD CURRENT OPTIMIZATION

It will be recomended that the record current be optimized before every recording in order to assure maximum signal-to-noise ratio from the various tape being used. Optimize the record current referring to Sec. 9-3.

4-5. TRACKING CHECK

Check that the flatness of envelope, the fluctuation of amplitude and the tape-to-head contact by playing back an alignment tape (BR5-2), refering to Sec. 10-3-1.

4-6. HEAD-TIPS PROJECTION CHECK

The operational lives of the video head and the sync head mounted on the upper drum can be used for 500 hours of operation. It is recommended to replace the upper drum every 500 hours of operation or to check the heads tip projection after 500 hours operation to determine whether or not they should be replaced. If the head tip projection is more than 50μm, recording can be done.

1. Remove the "S" side drum panel, according to Section 2-3.
2. Prepare the upper drum eccentricity adjustment jig and confirm that the tip of the probe of the dial gauge centers, on the white plastic pin inserted in the measurement arm. If it does not, adjust the probe of the dial gauge by bending it in the direction shown by the arrow until it is centers. (If this adjustment is poor, the zero point adjustment of the gauge will not be impossible or an abnormal force will be applied to the heads or the upper drum, with possible damage.)

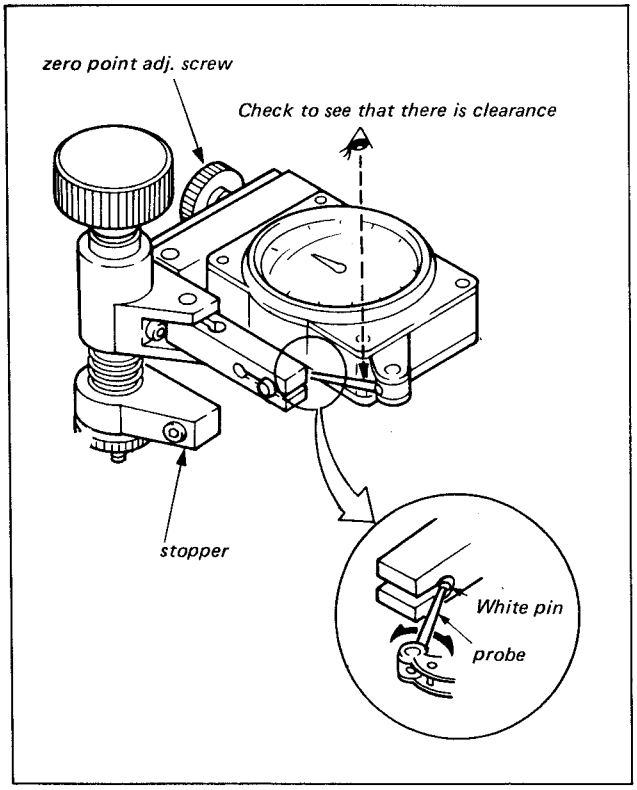

Fig. 4-3. Head projection measurement; Confirmation of jig setting

3. Turn the zero point adjustment screw shown in Fig. 4-3 counter-clockwise.

4. Attach the jig to the drum base while holding the stopper (shown in Fig. 4-3) to the side of the lower drum.

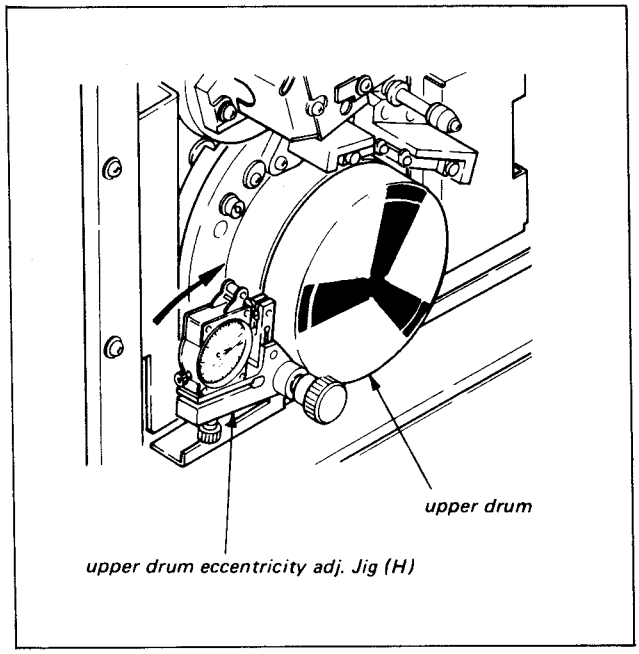

Fig. 4-4. Head projection measurement; Jig setting

5. Turn the jig in the C direction, move it then in the A direction as far as it will go. Turn the jig toward the drum. Refer to Fig. 4-5.

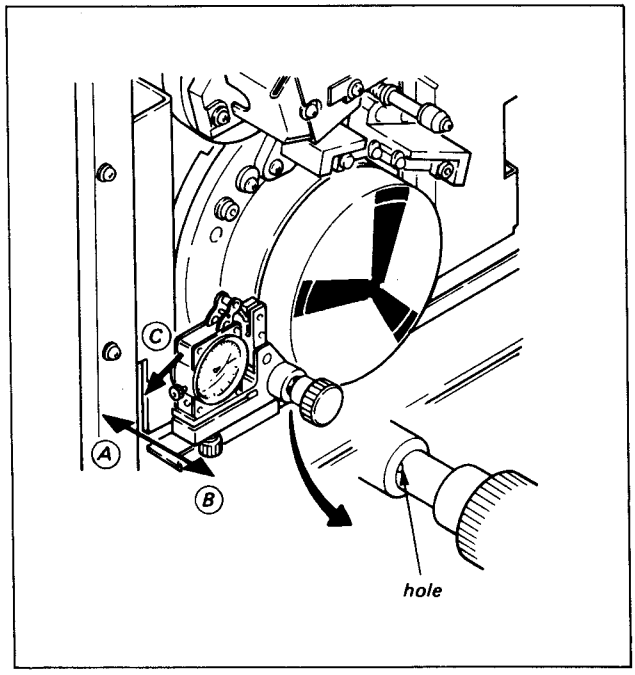

Fig. 4-5. Head projection measurement; Jig setting

6. Turn the upper drum slowly by the hand so as to bring the head tip (sync head) close to the measurement arm. Do not position the head tip on white plastic pin of the measurement arm tip.
Turn the zero adjustment screw for zero dial gauge reading.

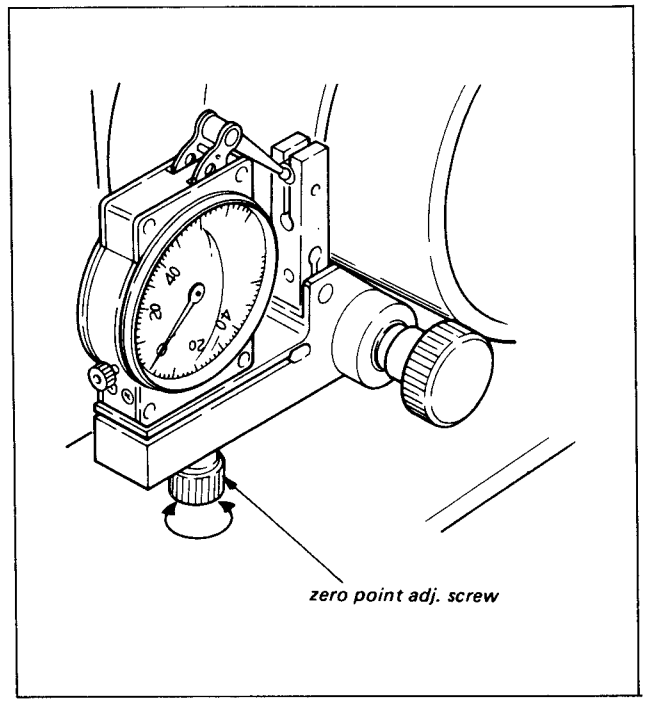

Fig. 4-6. Head projection measurement; Zero adjustment

7. Turn the upper drum slowly by the hand so as to bring the head tip (sync head) on the white plastic pin of the measurement arm tip. If the dial gauge reading in this set-up is more than 50μ (the head projection from the upper drum surface is more than 50μ), the replacement is not required. If the reading is less than 50μ, the upper drum must be replaced.

8. After the measurement, turn the zero adjustment screw counterclockwise.

9. Turn the jig in the C direction as shown in Fig. 4-5, move it then in the B direction and finally move the jig toward the drum to the location where half of the hole shown in the figure is hiden.

10. Measure the projection of the video head as in Steps (6) and (7). If the projection is more than 50μ, the upper drum is not required to be replaced however, if it is less than 50μ, the drum must be replaced following the upper drum replacement in Sec. 5-1.

11. After adjustment, turn the zero point adjustment screw fully counterclockwise and remove it from the drum.

4-7. TENSION DETECTOR CHECK

Check and adjust that the Tension Detector referring to Sec. 7-7.

4-8 Cleaning of Slip-Rings and Brushes

< General Coments >

1. The Slip-Rings and Brushes of Head Drum Assembly do not necessary periodical cleaning. However if a slipring-noise appears on the video monitor, clean the Slip-Rings and Brushes as follows.
2. Clean the Slip-Rings and Brushes by a soft and short hair's brush. If the brush cannot be obtained, prepair a blower brush and a cotton swab which flattens its top with a hammer.
3. Cleaning-fluid does not necessary. However if it is difficult to remove persistent debris, use Freon as cleaning-fluid.

– CAUTION –

1 Do not use alcohol as cleaning fluid. If the Slip-Rings and Brushes are cleaned with alcohol. Their surface tend to be covered with material that can heighten the resistance of contact.

2 Do not use conductive grease.

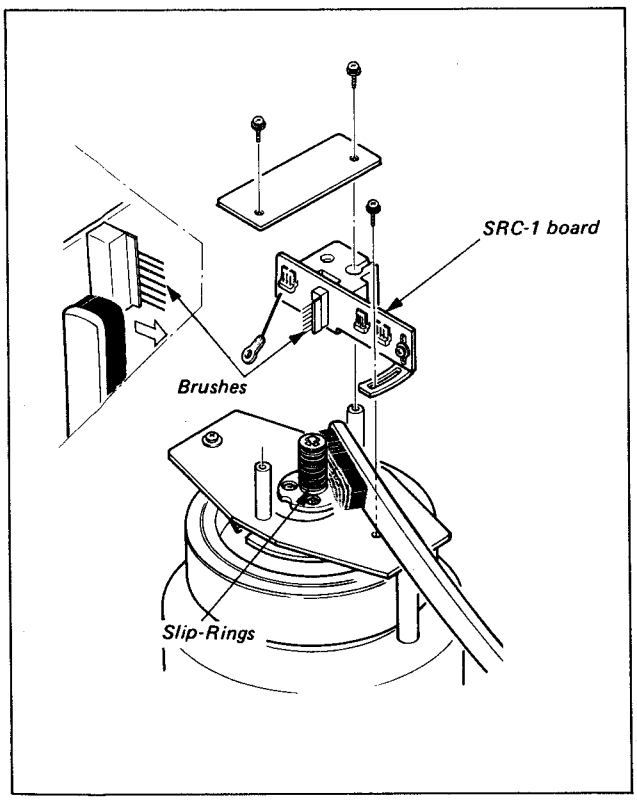

Fig. 4-7. Slip-Ring and Brush

< Cleaning Procedure >

1. Remove the SRC-1 board referring to section 5-9.
2. Clean the Brushes, moving the cleaning brush always in a direction of free end of Brushes.

– CAUTION –

Be careful not to bend the fragile Brushes.

3. Hold the cleaning brush against the Slip-Rings. Clean the rings while rotating the Upper Drum.
4. Reinstall the SRC-1 board, referring to section 5-9. Then adjust contacting pressure of the Brushes.

SECTION 5
REPLACEMENT

5-1. REPLACEMENT OF UPPER DRUM ASSEMBLY

- The R/P video head, R/P sync head, play video head, play sync head and rotary erase heads cannot be replaced individually. Whole upper drum assembly must be replaced when anyone of heads fails.
- Drum is easily scared. Use extreme care in replacement
- Do not loosen the hex nut in the center of the head drum assembly.

< **Replacement** >

Removal

1. Remove the drum panel (S) ass'y.
2. Remove the drum lid. (B2.6x6, 3 pcs.)
3. Remove the DRM-1 board. (B3x5, 3 pcs)
4. Remove the upper drum ass'y. (Cap screw 4x12, 2 pcs.)

   Note: If there is a spacer between drum and flange, it should remain in place.

Cleaning

5. Clean the following parts with a cleaning piece moistened with a cleaning fluid.

- Slanted tape guide, lower flange of slanted tape guide, upper edge of lower drum, tape contacting surface, lead, flange surface.

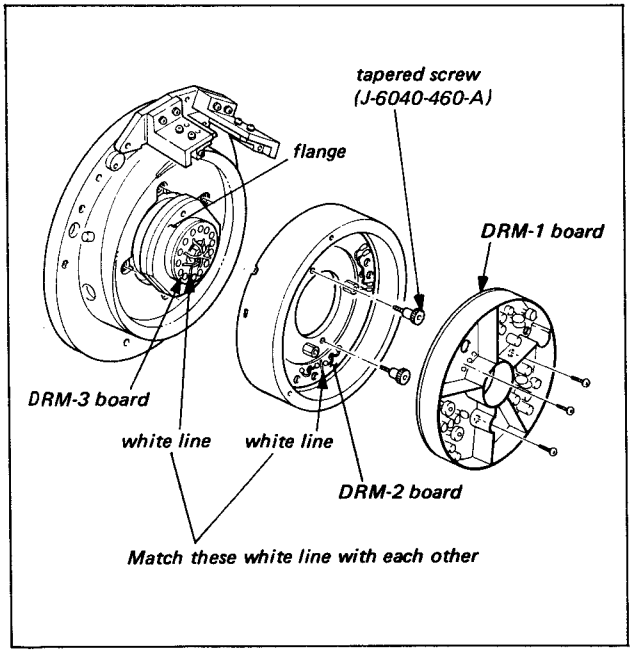

Fig. 5-1. Replacement of upper drum assembly

Installation

6. Tighten temporarily two Tapered Screws (SONY Part No. J-6040-460-A) so that the white line of the DRM-2 board on the upper drum corresponds with that of DRM-3 board on the lower drum flange.
7. Remove the Tapered Screw near the rotary erase heads and insert a capscrew with a spring washer and a flat washer into the hole. Tighten it temporarily.
8. Remove the other Tapered Screw and insert a cap screw as same as step 7.

Upper drum eccentricity adj

9. Adjust the eccentricity of the upper drum, referring to Sec. 9-1.

Reinstallation

10. Fix the DRM-1 board with three screws so that the DRM-1 board is placed onto the two spring-pins pressed into the upper drum.
11. Reinstall the upper drum lid.

    Note: The direction marks of R/P head printed on DRM-1 board and the lid should be matched.

Adjustment

12. Follow the flow chart below to perform the checks and adjustments necessary after upper drum assembly replacement.

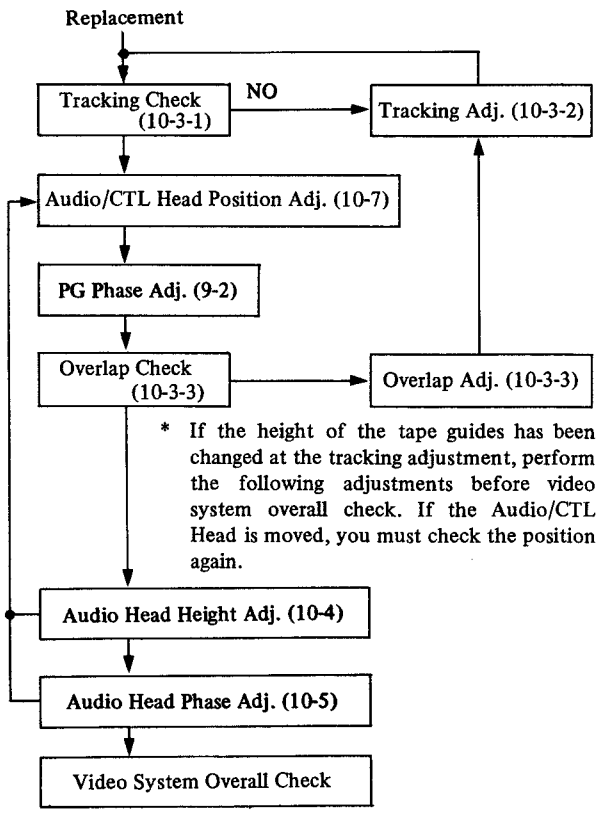

5-2. REPLACEMENT OF HEAD DRUM ASSEMBLY

Note: If only slant guide assembly will be removed or replaced, the stopper showned in Fig. 5-3 should not be moved. After replacement, check and adjust following the flowchart in Section 10.

< Replacement >

Removal

1. Remove the connectors from the printed boards as follows.

- SRC-1 board: CN317, CN318, CN319
- RF SW board: CN314, CN315, CN316
- REC AMP board: CN304, CN305.
- MPA-A board: CN366, CN369.

2. Remove the two, screws securing the slant guide shown in Fig. 5-3.

3. Remove the three capscrews which secures the head drum assembly.

Installation

4. Install the new head drum assembly so that the guide pin pressed into the drum base is placed in the reference hole on the flange surface of the head drum assembly.

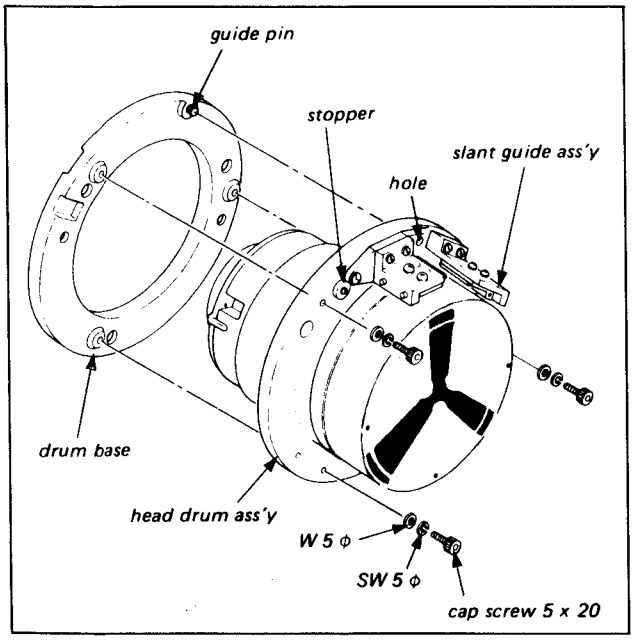

Fig. 5-2. Replacement of the head drum ass'y

Reinstallation

5. Connect the connectors removed in step 1.

6. Clean the tape guide of slant guide assembly removed in step 2 and loosen two setscrews shown in Fig. 5-3. Then place the slant guide assembly so that the reference hole at the center of the slant guide assembly aligns with the hole on the lower drum flange surface of the head drum assembly.
Tighten two screws while pushing the slant guide assembly toward the lower drum.

7. Confirm that the gap between the guide plate and the upper drum is more than 0.09 mm by thickness gauge. If the gap is less than 0.09 mm, adjust the overlap referring to Section 10-3-3.

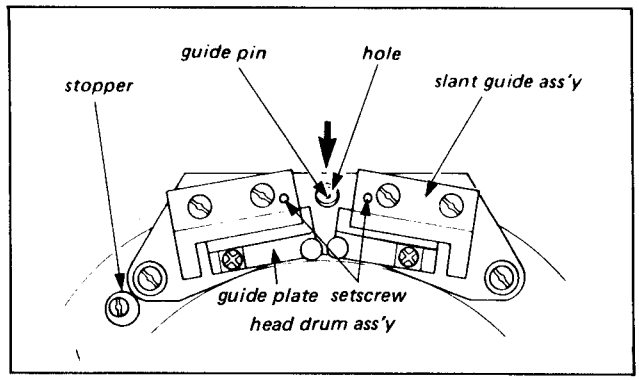

Fig. 5-3. Replacement slant guide ass'y (power off mode)

8. Turn the stopper clockwise until it touches the slant guide assembly, then fix it.

Adjustment

9. Follow the flow chart below to perform the checks and adjustments necessary after head drum assembly replacement.

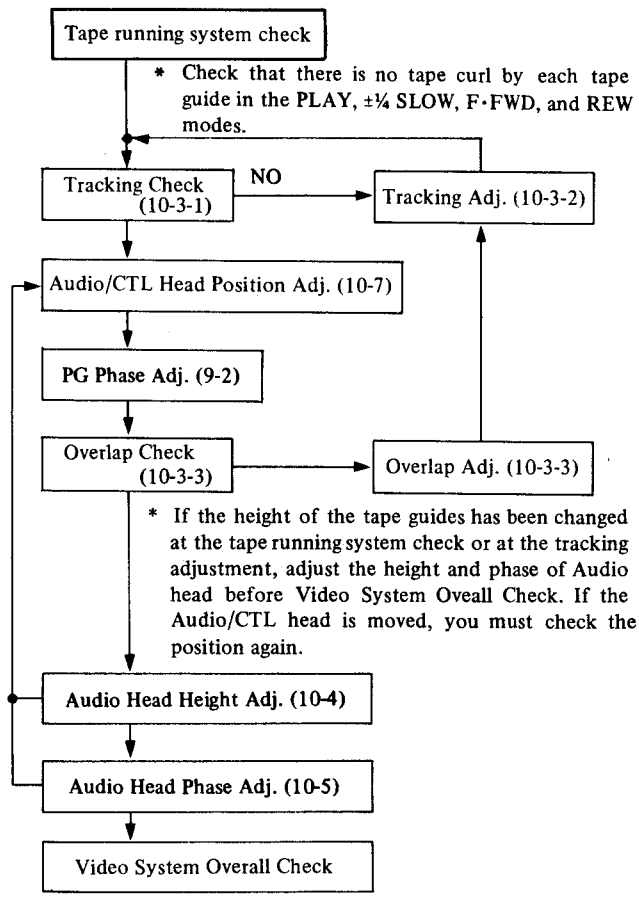

5-3. REPLACEMENT OF AUDIO/CTL HEAD

1. Remove the lead wires of the AUDIO/CTL head.

2. Replace the Audio/CTL Head and adjust the position. as described in Sec. 10-1 Audio Head Position Adj.

3. Solder the leads to the head as illustlated.

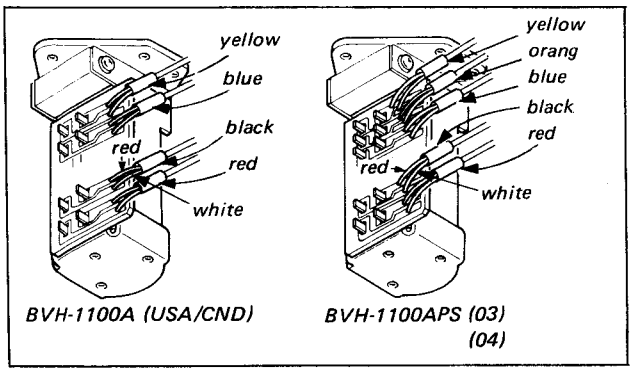

Fig. 5-4. AUDIO/CTL head lead connections

4. Perform in sequence the following adjustments

   Sec. 10-4. Audio Head Height Adjustment
   Sec. 10-5. Audio Phase Adjustment
   Sec. 10-7. Audio/CTL Head Position Adjustment
   Audio Alignment (Electrical Alignment)

5-4. REPLACEMENT OF AUDIO ERASE HEAD

- The replacement Audio Erase Head Ass'y is supplied as an assembled part of an Audio Erase Head and a Head Base. The height from the head base bottom to the Audio Erase Head is precisely set at the factory. Never attempt to disassemble this replacement part/assembly such in the case that one of the parts is going to be used for replacement. If it is disassembled and its components are installed separately on the machine, and Audio Signal cannot be erased correctly in the INSERT mode.

1. Unsolder leads, then remove the AUDIO/ERASE head.

   Note: Be sure not to lose the Erase Head Spacer.

2. Reinstall the new Audio Erase Head Ass'y with the spacer.

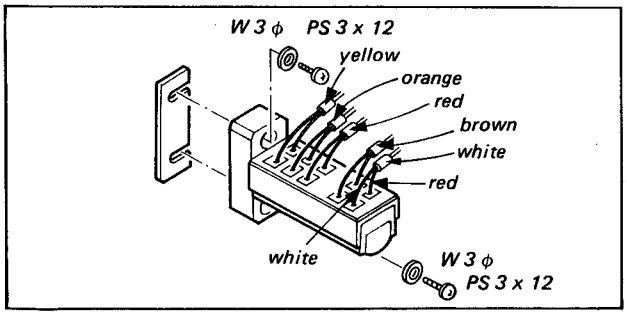

Fig. 5-5. AUDIO ERASE head lead connections

3. Perform "Audio Erase Head Height Adjustment" described in Sec. 10-6.

5-5. REPLACEMENT OF FULL ERASE HEAD

1. Take notes of the colors of leads, and write them down on the paper before unsoldering the leads.

2. Unsolder the leads at rear of Full Erase Head.

3. Replace Full Erase Head.

4. Solder the leads as noted in Step 1.

5. Perform Audio Electrical Alignment.

5-6. REEL TABLE REPLACEMENT

1. Measure the height of the Reel Table before removing the reel table with using a slide vernier calipers as shown in Fig. 5-6. Take note of the measure value.

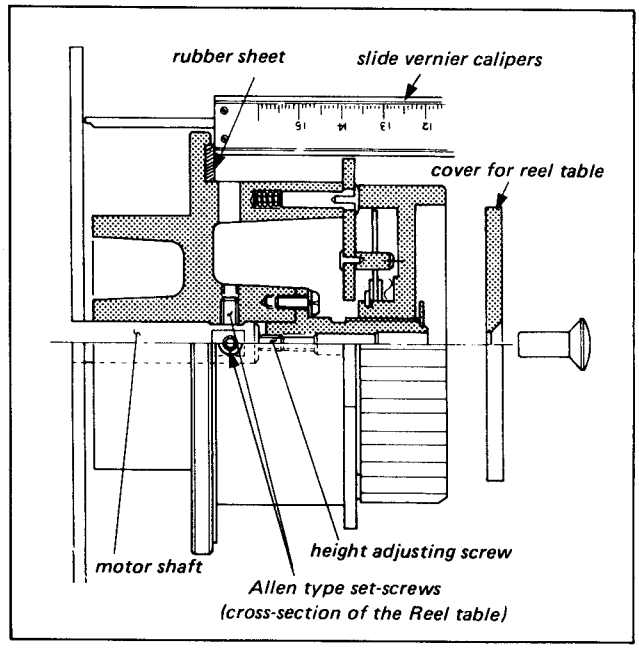

Fig. 5-6. Reel table replacement (power off mode)

2. Using an Allen wrench, loosen two set-screws (shown in Fig. 5-6.) that secure the Reel Table on the Reel Motor Shaft. Push – down the Brake Solenoid iron core so that the Brake Band is released. Remove the Reel Table.

3. Install a replacement Reel Table on the Reel Motor Shaft, so that the bevelled portion of the shaft is aligned toward the two set-screws of the Reel Table.

4. Remove the Cover for Reel Table Cover.

5. Turn the height adjusting screw while depressing the Reel Table against the chassis, so that the height of the Reel Table is identical to the value measured in step 1.

6. Perform Reel Table Height Adjustment described in Sec. 6-1.

5-7. REPLACEMENT OF TENSION ARM

- There are "S" Tension Arm Ass'y and "T" Tension Arm Ass'y. Their components consist of common parts. However installed positions of ARM LED board and spring are different in "S" and "T" Tension Arm Ass'y. Please order which you will require.

- Perform following adjustment after replacement.
  1 Tension Arm Position Adj. (Section 5-7-2)
  2 Reel Table Height Adj. (Section 6-1)

5-7-1. Replacement of Tension Arm Assembly

- We explain replacement method of "S" Tension Arm Ass'y. If you heed to replace "T" Tension Arm Ass'y, replace it referring to this section.

1. Pull out connector CN348 (CN347 in the case of replacement of "T" Tension Arm Ass'y) from PLUNGER-A board.

2. Remove the tension spring and the piston rod of air damper from "S" Tension Arm.

3. Install new "S" Tension Arm Ass'y, then hold the harness with tie as shown in Fig. 5-7.

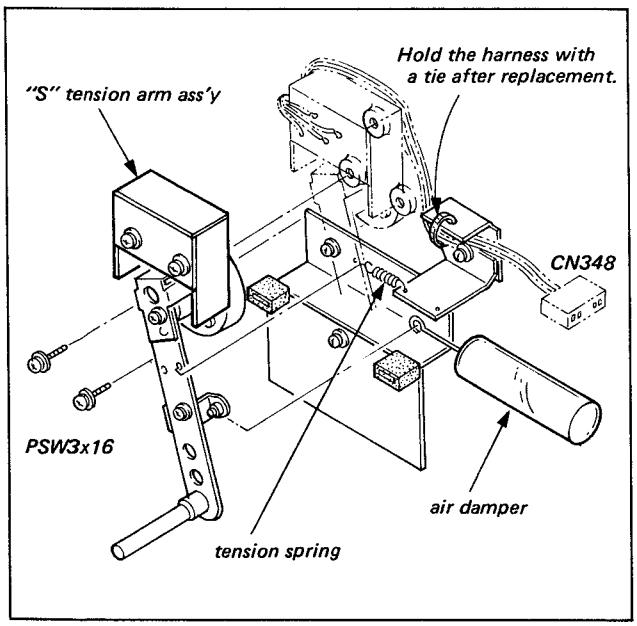

Fig. 5-7.

4. Connect connector CN348 (CN347) to PLUNGER-A board.

Note: Be sure not to contact the harness with the Reel Table or the Tension Arm.

5-7-2. Tension Arm Adjustment

- This adjustment consists of following two items.
  A. Arm Retaining Force Adj.
  B. Tape Slack Detection Position Adj.

A. Arm Relaining Force Adj.

- Prepare the followings for this adjustment

	SONY Part No.
tension gauge (200gr)	7-732-050-01
eccentric driver	J-6040-070-A

Adjustment Procedure

1. Set tension gauge to the Tape Guide Shaft of the Tension Arm as shown in Fig. 5-8. Push the Tape Guide Shaft by tension gauge in direction of arrow A shown in the figure. Confirm that the scale reading is 4 to 6 grams at the moment when the Tension Arm is detached from the stopper. If not, perform the following procedure.

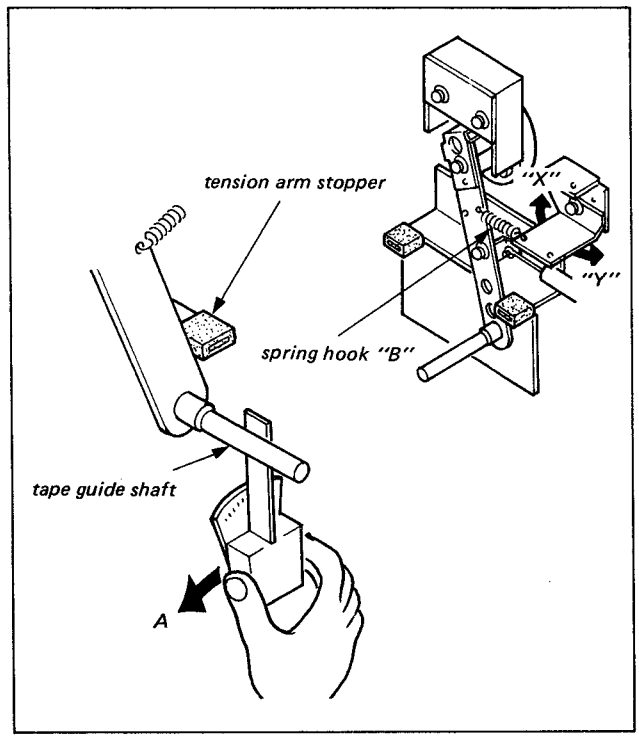

Fig. 5-8. Arm retaining force adj.

2. Release the screw slightly which secure spring hook "B" in Fig. 5-8. Check the direction which spring hook "B" must be moved, then insert the eccentric driver into one of the two adjustment holes and move spring hook "B" in direction of "X" or "Y".
   - If the scale reading is less than the specified value, move spring hook "B" in direction of "Y".
   - If the scale reading is more than the specified value, move spring hook "B" in direction of "X".

3. Push the Tension Arm in direction of arrow A, then slightly release your hand from the Tension Arm, and confirm that the Tension Arm contacts with the stopper. (Repeat this procedure two or three times.)

4. Glue the screw securing spring hook "B" with locking compound (e.g Neji lock ®)

B. Tape Slack Detection Position Adj.

- Prepair the following measurement tools.

Oscilloscope
Block gauge or thickness gauge (2mm in thickness)

Adjustment of "S" Tension Arm

1. Insert the block gauge of 2mm in thickness between "S" Tension Arm and the Stopper as shown in Fig.5-9.

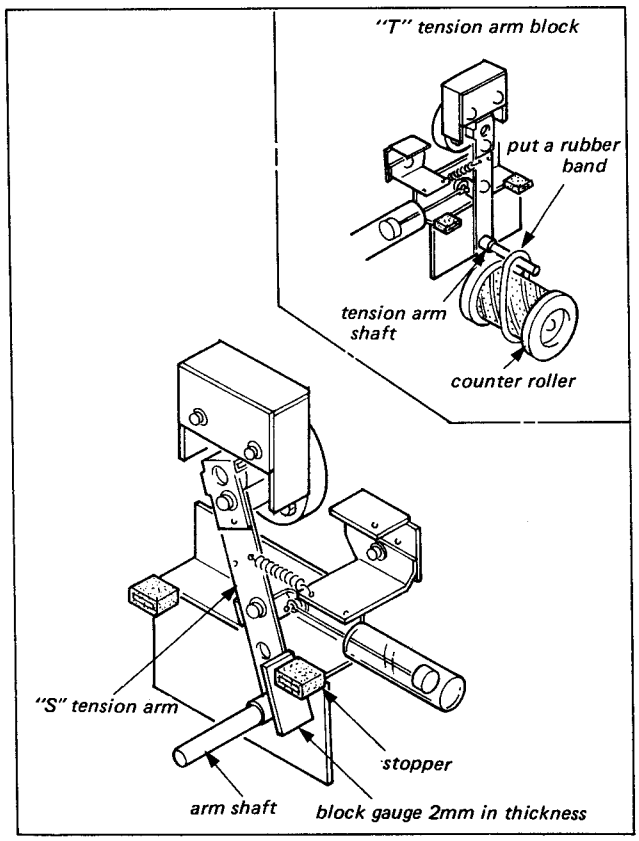

Fig. 5-9. S tension arm adj.

2. Put a rubber band on the Arm Shaft of "T" Tension Arm and the Counter Roller as shown in Fig. 5-9.

3. Connect scope to TP-3 on the REEL-1A board confirm that the output is as shown in Fig. 5-10. If the output is always HIGH or LOW, adjust RV-7/REEL-1A board.

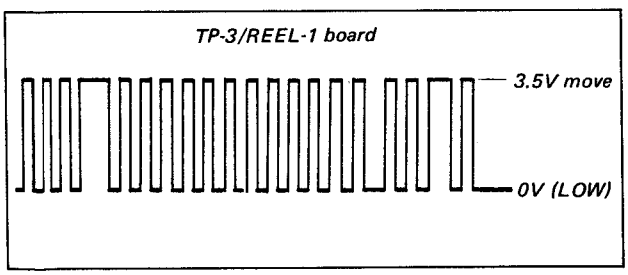

Fig. 5-10.

Adjustment of "T" Tension Arm

1. Insert the block gauge of 2mm in thickness between "T" Tension Arm and the Stopper as shown in Fig. 5-11.

2. Put a rubber band on the Arm Shaft of "T" Tension Arm and the Counter Roller as shown in Fig. 5-11.

3. Connect scope to TP-3 on the REEL-1A board, confirm that the output is as shown in Fig. 5-11. If the output is always HIGH or LOW, adjust RV-8/REEL-1A board.

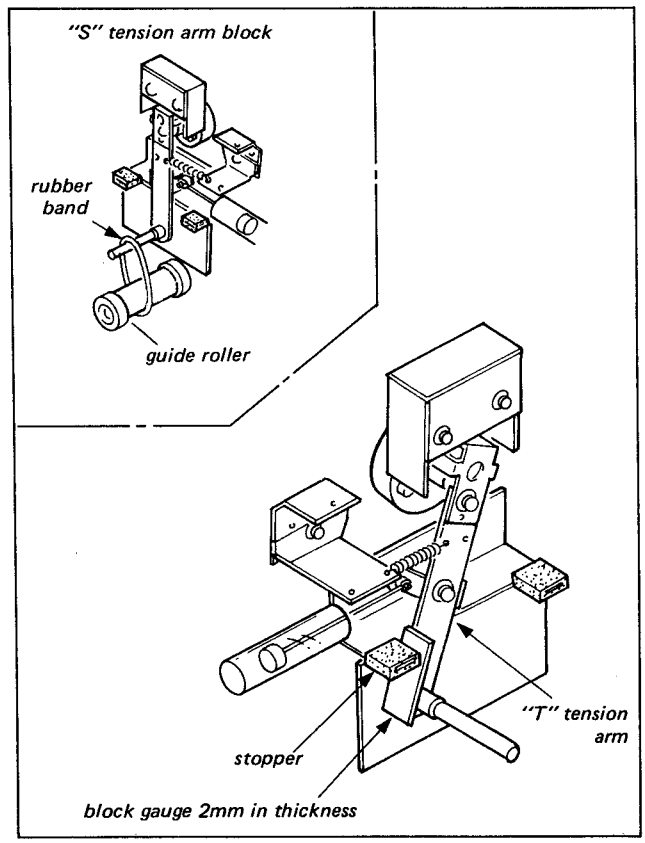

Fig. 5-11. T tension arm adj.

5-8. PHOTOCOUPLER REPLACEMENT

1. Counter Roller Unit

1. Remove screws A, B, C and D.
2. Cut the dotted portion of the Photo-coupler as illustrated in Fig. 5-8.
3. Replace Photo-coupler and secure screws A, B, C and D.
4. Adjust photo-coupler in the directions shown by arrows so that any Counter Roller components will not touch the photo-coupler.

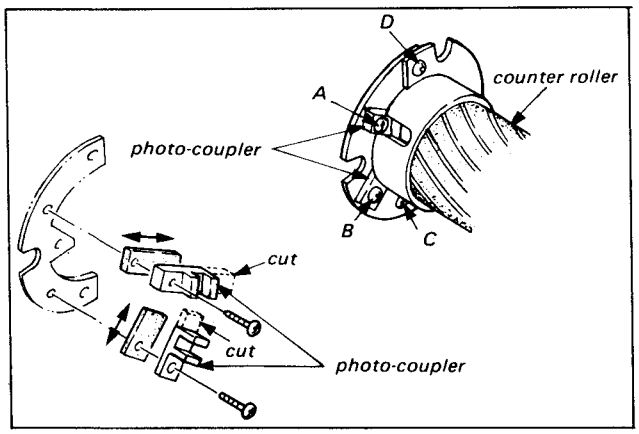

Fig. 5-12. Photo-coupler replacement (counter roller unit)

2. Search Control Unit

1. Remove Lamp Printed Board and Escutcheon Panel.
2. Remove the Function Base.
3. Cut off portion of Photocoupler as illustrated in Fig. 5-9.
4. Replace Photo Coupler and reinstall Function Base, Lamp Printed Board and Escutcheon Panel.
5. Perform the Photo-Coupler Phase Adjustment.

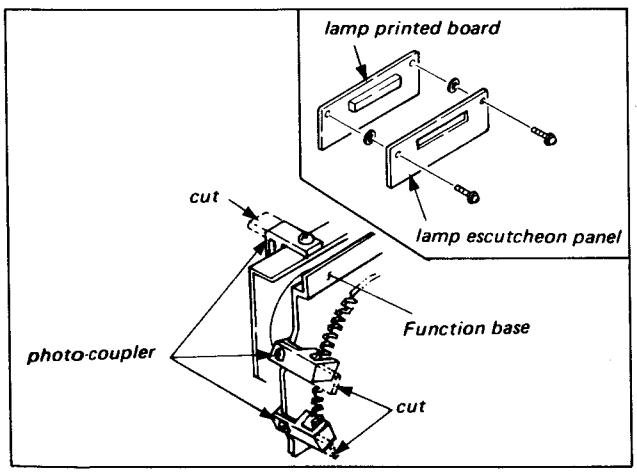

Fig. 5-13. Photo-coupler replacement (search control unit)

5-9. BRUSH AND SLIP RING REPLACEMENT

- The Brush and Slip Ring do not require periodic replacement. However, replacement will be required if a noise band like white drop does not disappear in the video display even after the Brush and the Slip ring cleaning has been done.

A. Replacement of Brush

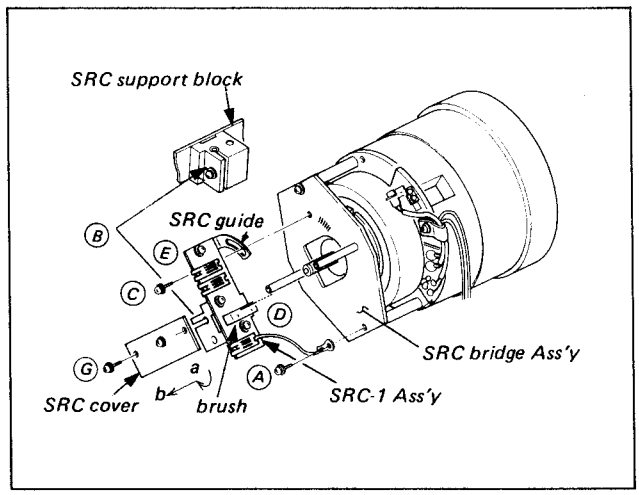

Fig. 5-14. Brush Replacement

Preparation

1. Remove the Side Cover (L/R), and then open Amp-Chassis.
2. Remove the SRC Cover from SRC Bridge assembly.
3. Disconnect CN317, 318 and CN319 located on the SRC-1 board.

Remove the defective SRC-1 Ass'y

4. Remove the fixing screw (A) shown in Fig. 5-14. that secure the ground wire with lug terminal.
5. Loosen the fixing screw (B) securing SRC Support Block.
6. Remove the fixing screw (C) that secure the SRC Guide.
7. Move the SRC-1 Ass'y in the direction of "a", and then remove it in the direction of "b" as shown in Fig. 5-14.
8. Remove the SRC Support Block and the SRC Guide from the defective SRC-1 board.

Install the replacement SRC-1 Ass'y

9. Install the SRC Guide removed in step 8 on new SRC-1 board temporarily.
10. Insert the spring pins of SRC Support Block into the holes of brush assembly on new SRC-1 board. And then tighten the two screws (PSW 3x6) as shown in Fig. 5-15.

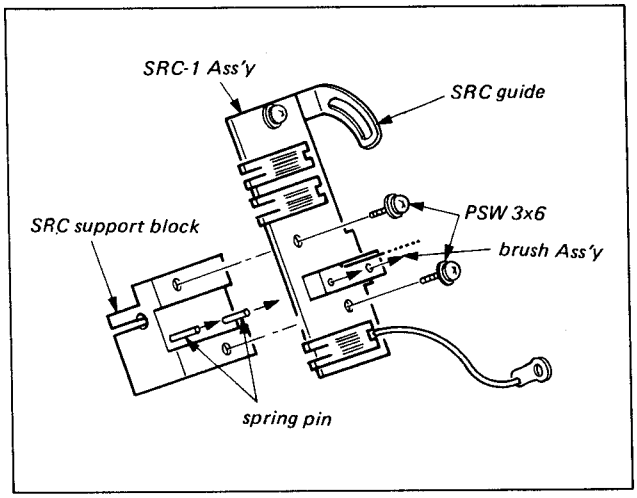

Fig. 5-15. New SRC-1 Ass'y Installation

11. Clean the brush and the slip ring with Freon or other cleaning fluid.

Note: Do not use alcohol as cleaning fluid.

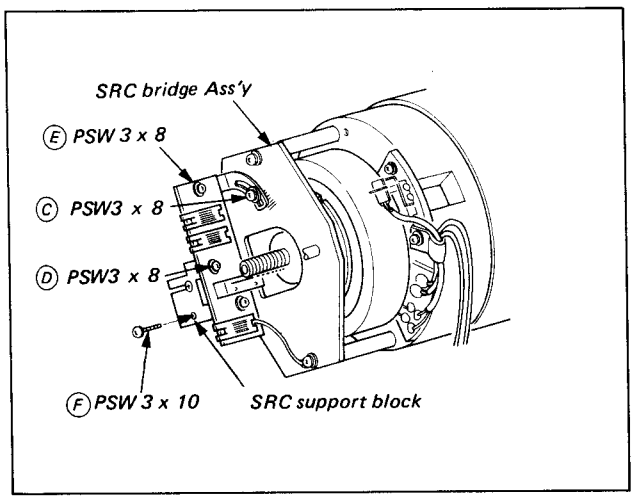

Fig. 5-16.

12. Place the SRC Support Block with SRC-1 Ass'y onto the SRC Block Shaft. Reinstall the lug terminal removed in step 4. Refer to Fig. 5-16.

Adjust the brush position

13. Move the brush to the slip ring until just before contact. Then, tighten the screw Ⓒ as shown in Fig. 5-16.

14. Loosen the screw Ⓔ which holding SRC-1 Ass'y. Refer to Fig. 5-16.

15. Turn the screw Ⓕ until each brush is located in the center of each slip ring channel.

16. Tighten the screw Ⓔ as shown in Fig. 5-16.

Adjust the contacting pressure of brush

17. Loosen the screw Ⓒ that secures the SRC Guide to SRC Bridge Ass'y.

18. Turn the SRC-1 Ass'y to counter clock wise (CCW). Read scales on the SRC Bridge Ass'y when the brush is just touched to the slip ring, and then move it one more scale in the same direction. Then tighten screw Ⓒ again. Reinstall the SRC cover. Refer to Fig. 5-14. and Fig. 5-17.

Note: If it will be required also to replace a slip ring assembly, proceed step 1. of B (Slip Ring Replacement succeeding this step.

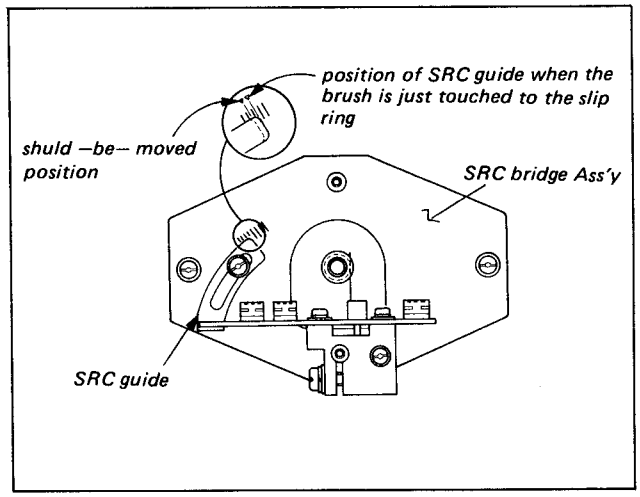

Fig. 5-17. Brush Contacting Pressure Adjustment

Check mechanical and electrical noise

19. Check mechanical noise, while manually turning the drum.

20. Connect CN317, 318 and CN319 to the SRC-1 board, and turn on the power, and confirm that a slip-ring noise like white drops does not appear in the video display in Rec Play mode (Rec mode with monitoring.)
If a noise band appears even after about 5 minutes, readjust contacting presure of brush as follows.

21. Loosen the screw Ⓑ and Ⓒ then rotate the SRC Guide counter clockwise for 1/3 pitch of scale on the SRC Bridge Ass'y, and tighten the screw Ⓑ and Ⓒ , and perform step 20. again.

B. Replacement of Slip Ring

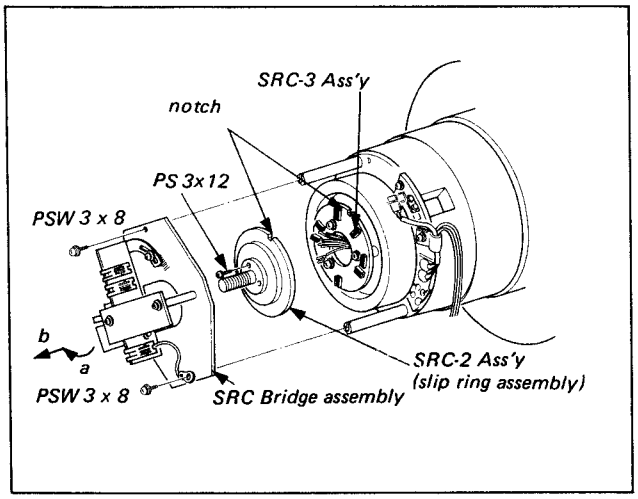

Fig. 5-18. Slip Ring Replacement

Remove the SRC Bridge assembly

1. Remove the two PSW 3x6 screws that secure the SRC Briges assembly. To prevent the brush damage, move the SRC Bridge assembly slightly in the direction "a", then remove it in the direction "b" as shown in Fig. 5-18.

Remove the defective slipring assembly

2. Remove the three PS 3x12 screws that secure the SRC-2 Ass'y (slip ring assembly) to the PG Wheel.

Install the entire slip ring assembly

3. Install the SRC-2 Ass'y (slip ring assembly) to the SRC-3 Ass'y, with making the notch of SRC-2 Ass'y coincide with the notch of SRC-3 Ass'y.

Reinstall the SRC Bridge assembly

4. Reinstall the SRC Bridge assembly in the reverse order of step 1, however, if each brush does not be located in the center of slip ring channels, adjust the position of brushes performing step 13 through 16 of "Replacement of Brush".

Adjust the contacting pressure of brush

5. Loosen the screw Ⓒ that secures the SRC Guide to SRC Bridge Ass'y.

6. Turn the SRC-1 Ass'y to counter clock wise (CCW). Read scales on the SRC Bridge Ass'y when the brush is just touched to the slip ring, and then move it one more scale in the same direction, Then tighten screw Ⓒ again. Reinstall the SRC cover. Refer to Fig. 5-14. and Fig. 5-17.

7. Connect CN317, 318 and CN319 to the SRC-1 board.

Check mechanical and electrical noise

8. Check mechanical noise, while manually turning the drum. Turn on the power, and confirm that a slip-ring noise like white drops does not appear in the video display in Rec Play mode. (Rec mode with monitoring.)
If a noise band appears even after about 5 minutes, readjust contacting presure of brush as follows.

9. Loosen the screw Ⓑ and Ⓒ then rotate the SRC Guide counter clockwise for 1/3 pitch of scale on the SRC Bridge Ass'y, and tighten the screw Ⓑ and Ⓒ , and perform step 20. again.

SECTION 6
REEL SYSTEM ALIGNMENT

6-1. REEL TABLE HEIGHT ADJUSTMENT

a. The height of the reel table was precisely adjusted at the factory before shipment, If a reel whose flange is not stable is used, the tape touches the reel flange and will be damaged. When the tape is changed, always check the tape to see if it has contacted the flange.

b. Refer to the Section 5-6 for the replacement of reel table.

1. Check to see that neither the top nor the bottom edge of the tape contacts the reel flange in PLAY, F.FWD and REW modes respectively. If tape contacts reel flange, adjust as follows.

2. Remove the tape and turn power off. Remove the Reel Table Cover, and loosen two setscrews securing the Reel Table about 90 degrees. See Fig. 6-1.

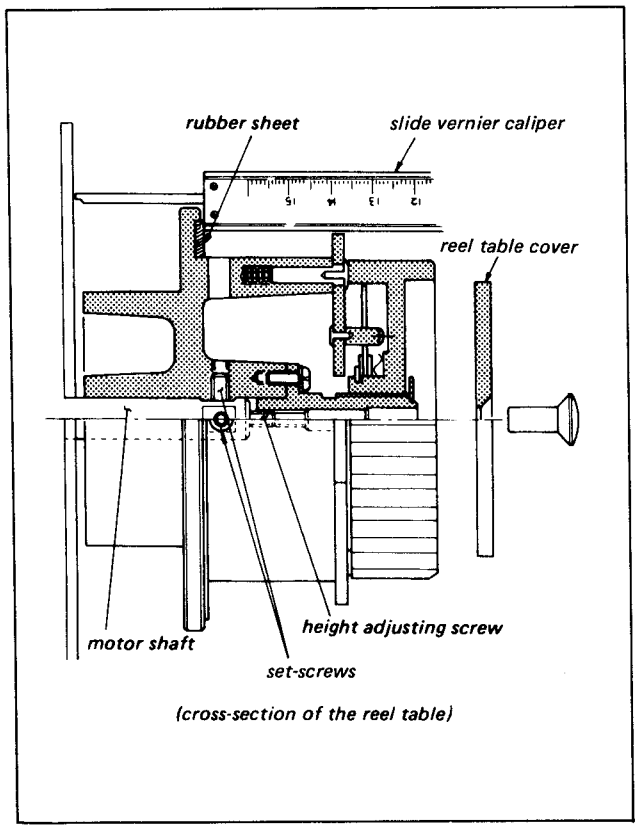

Fig. 6-1. Reel table height adjustment

3. a. If tape top edge contacts the upper reel flange, raise Reel Table height by turning the height adjusting screw clockwise.

   b. If tape bottom edge contacts lower reel flange, turn the height adjusting screw counter-clockwise ↺ while depressing the Reel Table against the chassis.

   Note: Turning the height adjusting screw clockwise, one turn raises the Reel Table by 0.7 mm.

4. After completing adjustment, tighten the two set-screws.

6-2. BRAKE BAND GAP ADJUSTMENT

CHECK

1. To check the brake band gap of the Supply Reel Table: Place machine in F.FWD mode without threading tape, referring to Sec. 2-2. Stop the revolution of the Supply Reel Table by hand. After complete stop, check to see that the Reel Table turns freely by hand and does not stop instantly. If it stops instantly, the brake band gap of the Supply Reel Table requires adjustment.

2. To check the brake band gap of the Take-up Reel Table: Place machine in REW mode without threading tape. Stop the revolution of the Take-up Reel Table by hand. After complete stop, check to see that the Reel Table turns freely by hand and does not stop instantly. If it stops instantly, the brake band gap of the Take-up Reel Table requires adjustment.

ADJUSTMENT

1. Remove the Reel Table referring to Sec. 5-6. Cut a standard 1" video tape 410 cm (16-1/8") long. Wrap the length of tape around the bottom of the Reel Table and place an adhesive tape over the end of the tape to hold it as shown in Fig. 6-2.

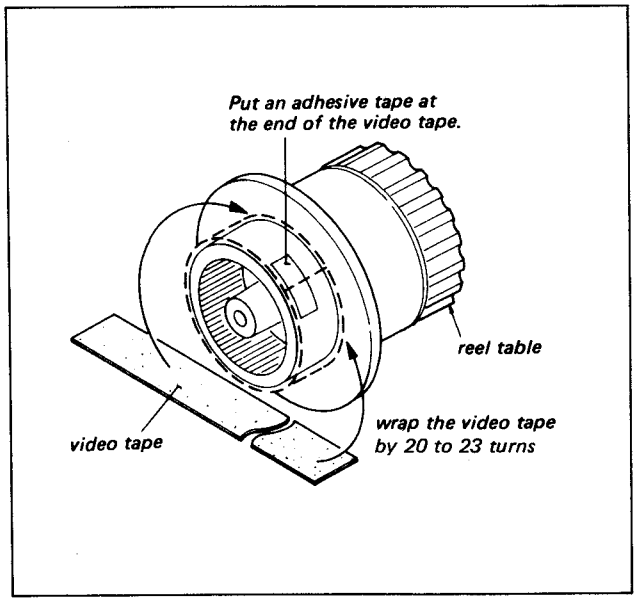

Fig. 6-2. Preparation for brake band gap adjustment

Note: The standard 1" video tape has a thickness of 0.03 mm. Wrapping a video tape by 20 to 23 turns increases the diameter by an additional 0.6 mm to 0.7 mm. The diameter of the reel table bottom may be 61.2 mm to 61.4 mm.

2. Turn the power off. Turn the two screws securing the Brake Band Guide 1/2 turn. Move the Brake Band Guide in the direction of "A" as far as it will go. See Fig. 6-3.

3. Push down the plunger of the Brake Solenoid in the direction of "B" until solenoid is in energized position, and install the Reel Table containing the tape on the Reel Motor Shaft so that the tape wrapped portion fits inside the Brake Band.

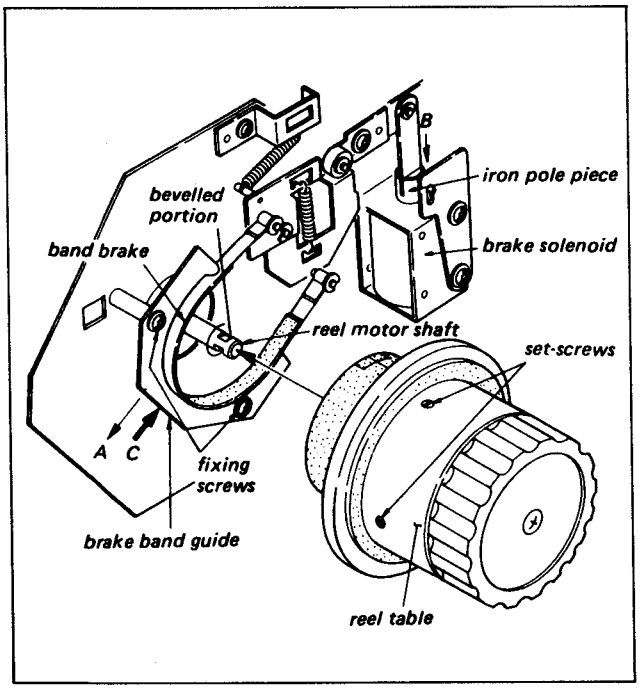

Fig. 6-3. Brake band gap adjustment

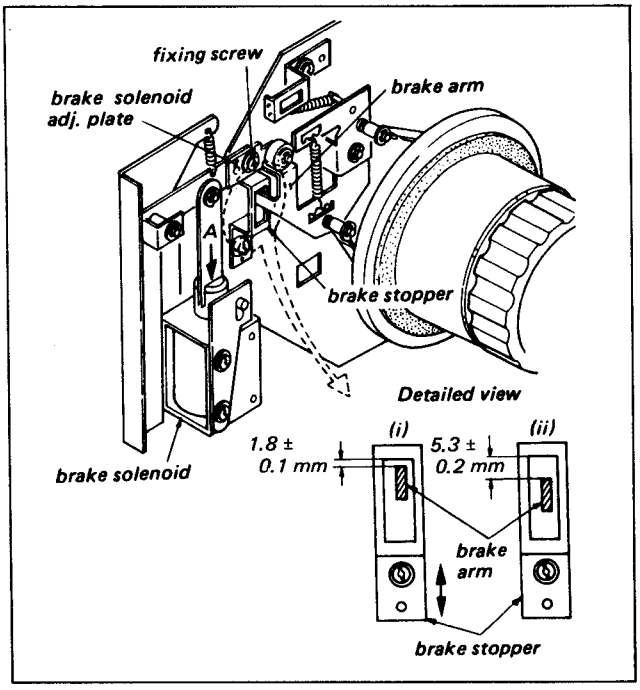

Fig. 6-4. Brake release adjustment

4. Push the Brake Band Guide in the direction "C" shown in Fig. 6-3 as far as it will go.
5. While holding the Brake Band securely, remove the Reel Table.
6. Tighten the two screws which secure the Brake Band Guide.
7. Remove the video tape from around the Reel Table. Install the Reel Table on the Reel Motor Shaft. Position the bevelled portion of the shaft toward the two set-screws of the Reel Table. While pressing the Reel Table towards the Motor, tighten the two set-screws.
8. Check to see that the Reel Table turns freely by hand and will not stop instantly.

6-3. BRAKE RELEASE ADJUSTMENT

- If there is excessive tape tension or tape slack at the moment when the machine is changed from the REV mode to the STOP mode, and/or the F.FWD mode to the STOP mode, especialy as the Reel Table slows to a complete stop, perform this adjustment and the Brake Band gap adjustment (Section 6-2).

1. Turn Power off. Confirm that the clearance between the Brake Arm and the Brake Stopper is 1.8 mm ± 0.1 mm as shown in Fig. 6-4(i). If not, adjust position of the Brake Stopper.
2. Press the Brake Solenoid plunger in direction of "A" (energized position), and confirm that the clearance between the Brake Arm and the Brake Stopper is 5.3 mm ± 0.2 mm as shown in Fig. 6-4 (ii). If not, adjust position of the Brake Solenoid Adj. Plate.

6-4. BRAKE SOLENOID STROKE ADJUSTMENT

- This adjustment is usually required only when the Brake Solenoid or Band Brake is replaced. Possible Brake Solenoid troubles are that the Brake Solenoid does not energize, or that the brake does not completely release the Reel Table.

1. Turn power on. Without threading tape, press the PLAY button to energize the Brake Solenoid.
2. Press the plunger of the solenoid to check that the solenoid is energized.
3. Confirm that the clearance between the Guide Plate and the Guide Pin is 1.5 mm as shown in Fig. 6-5. If not, adjust the Guide Plate position.

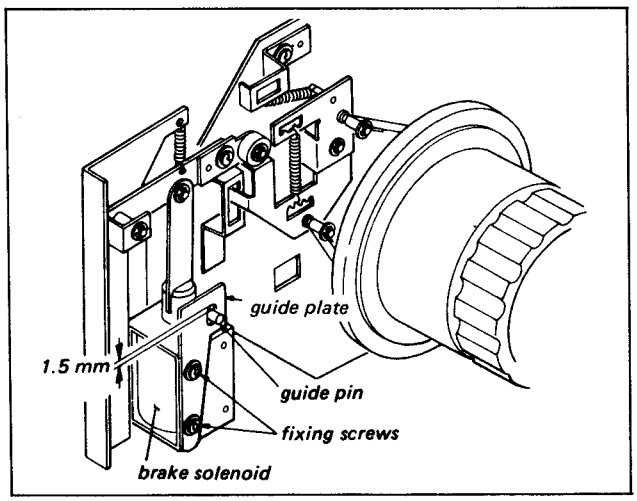

Fig. 6-5. Brake solenoid stroke adjustment

6-5. TAKE-UP REEL TABLE BRAKE TORQUE ADJUSTMENT

a. If there is excessive tape tension or tape slack at the moment when the machine is changed from the REV or F.FWD mode to the STOP mode, especially as the Reel Table slows to a complete stop, this adjustment should be required.

b. Prepare an empty reel which outside edge is tied with a string 70 inches (178 cm) in length.

a string 70 inches (178 cm) in length.

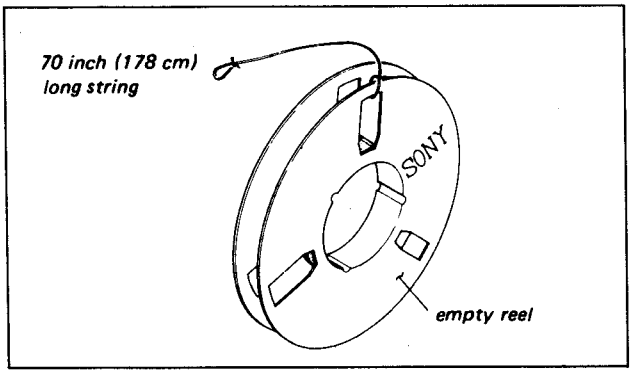

Fig. 6-6. Preparation for brake torque adjustment

6-5-1. "From F.FWD to Stop Mode" Parking Brake Torque Adjustment

1. Turn Power off. Wrap string around Empty Reel in the counter-clockwise direction. Install empty reel with string on the Take-up reel table. Tighten the reel table lock.

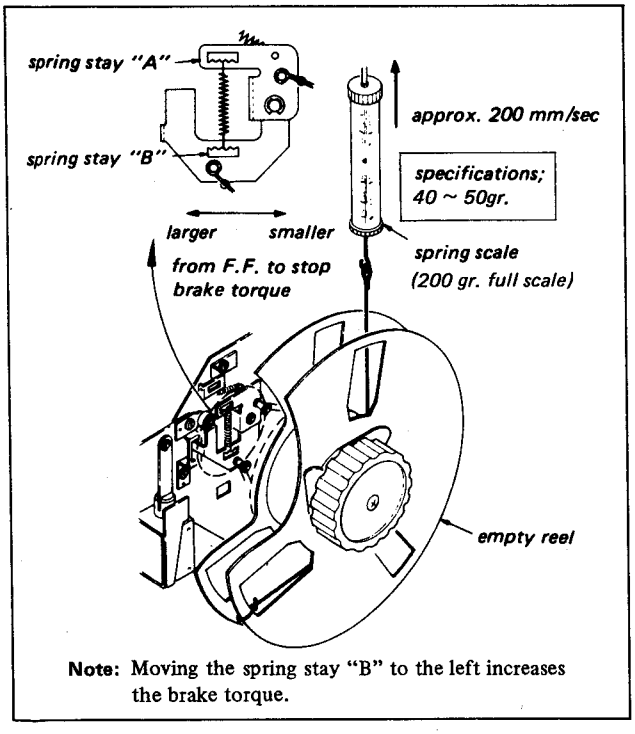

Note: Moving the spring stay "B" to the left increases the brake torque.

Fig. 6-7. T. reel table parking brake torque from F.F. to STOP

- Prepaire the following tension scales.

	SONY Part No.
200 grams full scale	J-6041-630-A
500 grams full scale	J-6040-310-A

2. Attach a spring scale (200 gr. full scale) to the end of the string. Pull spring scale at a constant speed of approximately 200 mm per second. Check to see that the scale reading is 40 to 50 gr.. If not, proceed to step 3.

3. Select another position of the spring stay "B" shown in Fig. 6-7 so that the scale reading is 45 gr..

6-5-2. "From REV to Stop Mode" Parking Brake Torque Adjustment

1. Turn Power off. Wrap string of Empty Reel in the clockwise direction. Install empty reel with string on the Take-up Reel Table. Tighten the reel table lock.

2. Attach a spring scale (500 gr. full scale) to the end of the string. Pull spring scale at a constant speed of approximately 200 mm per second. Check to see that the scale reading is 410 to 490 gr.. If not, proceed to step 3.

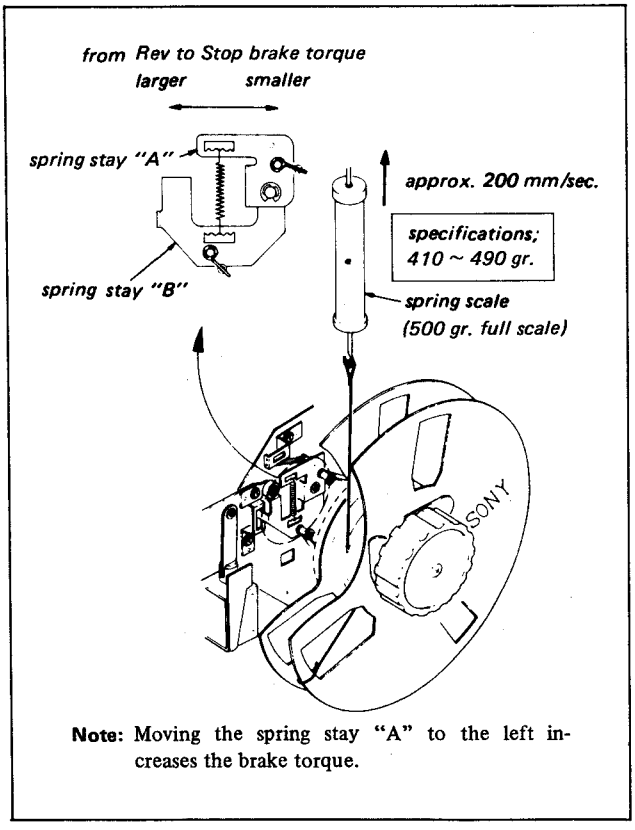

Note: Moving the spring stay "A" to the left increases the brake torque.

Fig. 6-8. T. reel table parking brake torque from REWIND to STOP

3. Select another position of the spring stay "A" shown in Fig. 6-8 so that the scale reading is 450 gr..

4. Check F.FWD to STOP mode parking brake torque, referring to Sec. 6-5-1.

6-6. SUPPLY REEL TABLE BRAKE TORQUE ADJUSTMENT

- If there is excessive tape tension or tape slack at the moment when the machine is changed from the REV or F.FWD mode to the STOP mode, especially as the Reel Table slows to a complete stop, this adjustment should be required.

6-6-1. "From REV to Stop Mode" Parking Brake Torque Adjustment

1. Turn Power off. Wrap string around Empty Reel in the clockwise direction. Install empty reel with string on the Supply Reel Table. Tighten the reel table lock.
2. Attach a spring scale (200 gr. full scale) to the end of string. Pull spring scale at a constant speed of approximately 200 mm per second. Check to see that the scale reading is 40 to 50 gr. If not, proceed to step 3.

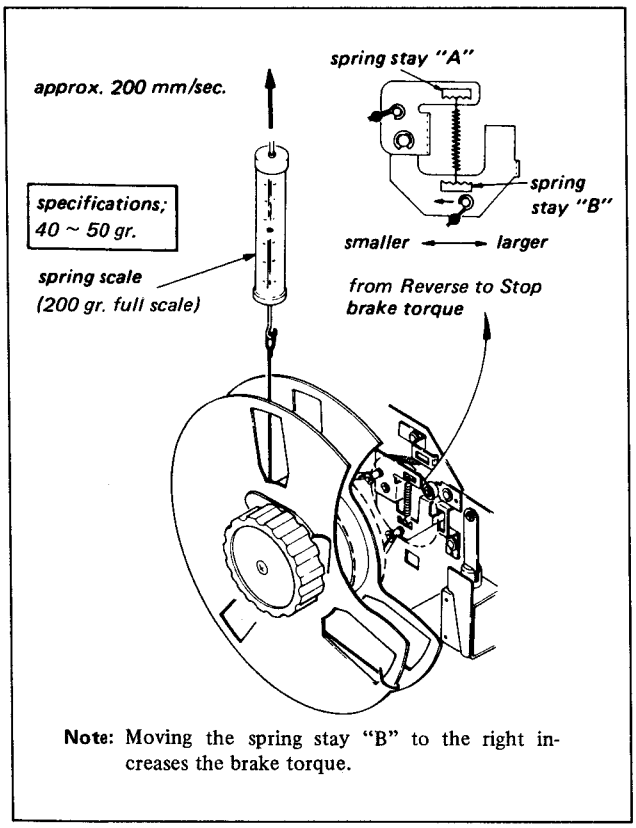

Note: Moving the spring stay "B" to the right increases the brake torque.

Fig. 6-9. Supply reel table brake torque adjustment

3. Select another position of the spring stay "B" shown in Fig. 6-9 so that the scale reading is 45 gr.

6-6-2. "From F.FWD to Stop Mode" Parking Brake Torque Adjustment

1. Turn Power off. Wrap string around Empty Reel in the counter-clockwise direction. Install empty reel with string on the Supply Reel Table. Tighten the reel table lock.
2. Attach a spring scale (500 gr. full scale) to the end of the string. Pull spring scale at a constant speed of approximately 200 mm per second. Check to see that the scale reading is 410 to 490 gr. If not, proceed to step 3.

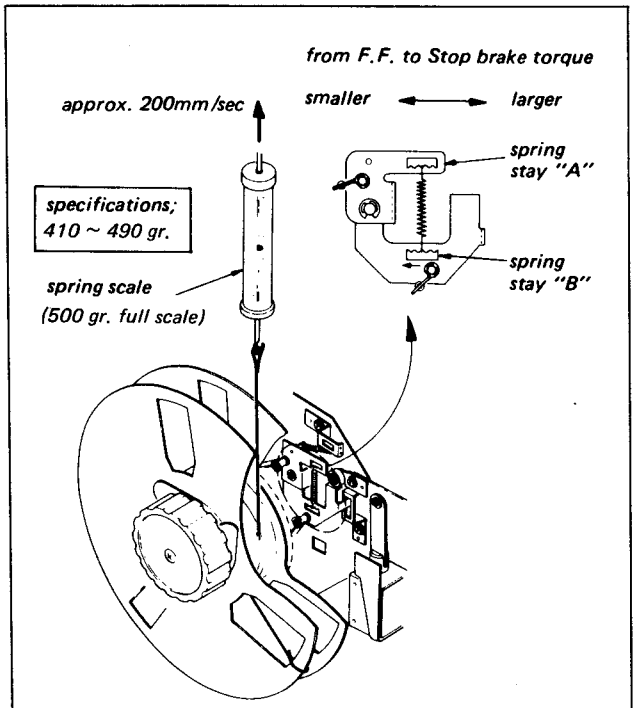

Note: Selecting the spring stay "A" to the right increases the brake torque.

Fig. 6-10. Supply reel table brake torque adjustment

3. Select another position of the spring stay "A" shown in Fig. 6-10 so that the scale reading is 450 gr.
4. Check REV to stop mode parking brake torque, referring to Sec. 6-6-1.

6-7. REEL MOTOR TORQUE ADJUSTMENT

PRECAUTION

a. Whenever the REG dc 12 V is adjusted, the torque adjustment must be made since a change in the REG dc 12 V results in a torque change.

b. Reel motor torque adjustment should be required when the Reel Motor, REEL-1A board, REEL-2A board, REG-1A board, REG-2 board or REG-3A board is replaced.

Note: Improper motor torque is possible to cause tape damage.

c. A rotation detection device, consisting of a disc and a photocoupler located on the rear of the reel motor, detects diameter of the Take-up-reel tape and diameter of the Supply-reel tape respectively. The detector operates in all modes and controls the reel motor torque.

d. The STILL mode has two states of operation. In one, the Pinch Roller is pressed against the capstan, while in the other it is not. However, the tape tension in the servo loop (between the Supply Capstan and the Take-up Capstan) is kept at the same value.

e. Tape speed modes are illustrated in Fig. 6-11.

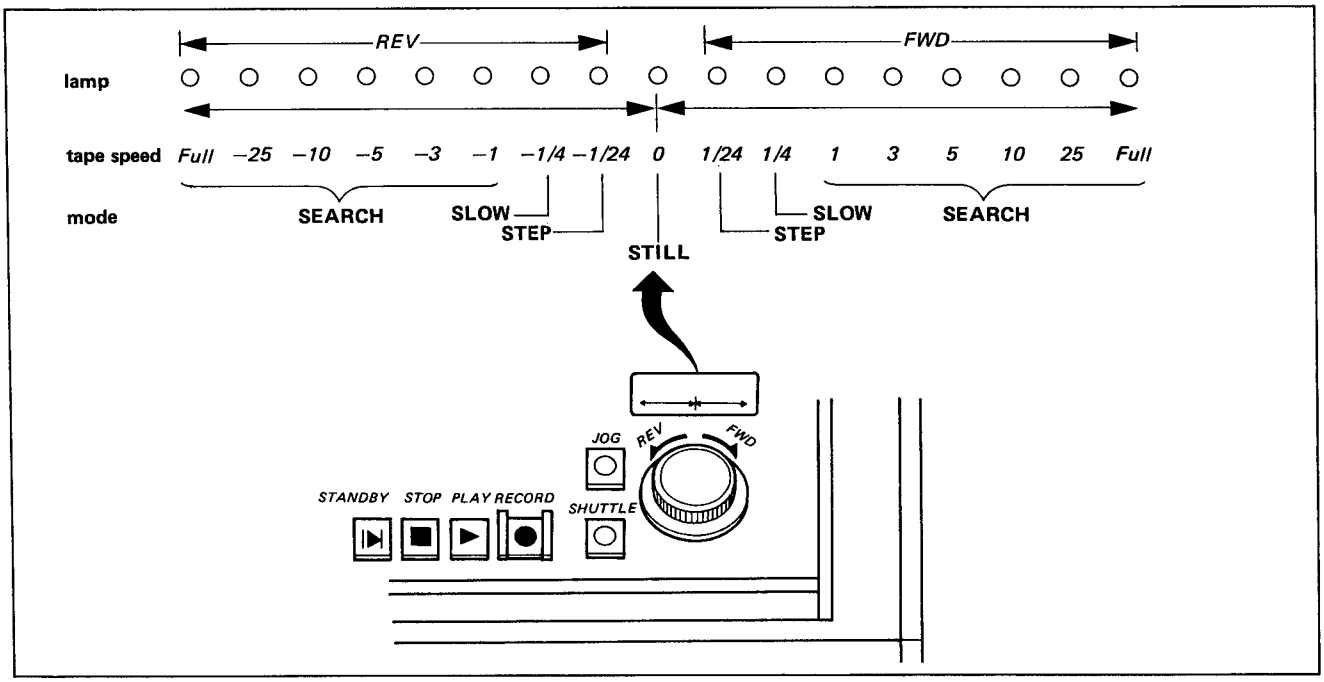

Fig. 6-11. Tape speed mode

f. This adjustment consists of the following five items. Adjust these items in this order.
   A. Reel motor zero torque adjustment
   B. Torque adjustment
   C. Search speed adjustment
   D. Quick start voltage adjustment
   E. Full REV torque adjustment

ADJUSTMENT PROCEDURE

A. Reel Motor Zero Torque Adjustment

- Prepair the following equipments

auto transformer (current-carrying capacity: 10 amperes)
AC voltmeter
oscilloscope

- If an auto tramsformer can not be obtained, perform only adjustment in Step 4.

1. Connect auto transformer and Ac voltmeter to the BVH-1100A.
2. Turn on the power of BVH-1100A, adjust the auto-transformer so that the indicaiton of the Ac voltmeter increases one volt more than the line power voltage.
3. Connect scope to TP1 on the REEL-2A Board. Adjust the volume controls ⊘ RV-6 and ⊘ RV-7 so that the voltage waveform satisfies the specification in Fig. 6-12.

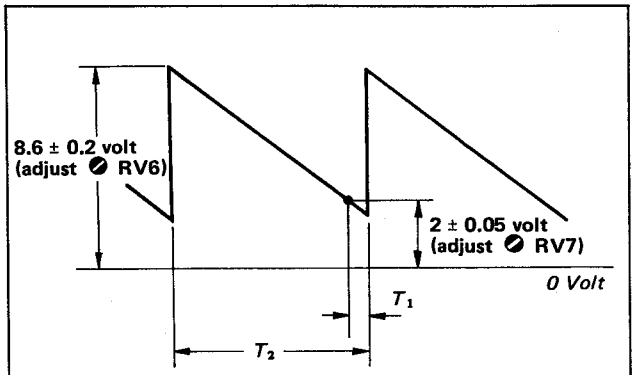

Power frequency	T_1 m sec	T_2 m sec
50 Hz	2	10
60 Hz	1.666	8.33

Fig. 6-12. Reel motor zero torque adjustment

4. There are slight voltage difference in every one cycle of the waveform at the TP1/REEL-2A Board. Adjust the volume control ⊘ RV-5 so that the voltage difference satisfies the specification shown in Fig. 6-13.

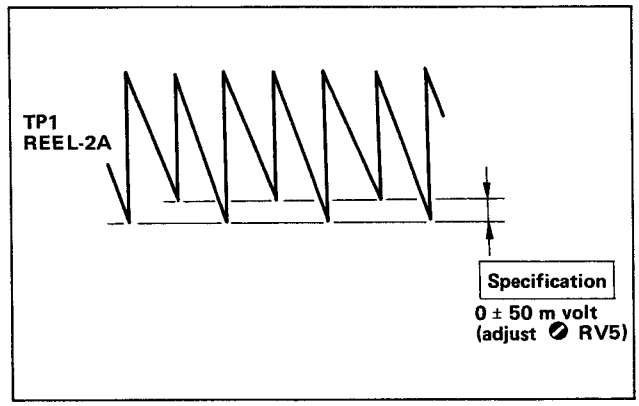

Fig. 6-13.

B. Torque Adjustment

1. Prepair the following tools

description	SONY Part No.
Tension scale (200 gr. full scale)	J-6041-630-A
empty reel with string (Refer to Sec. 6-5)	
tension alignment jig	J-6040-320-A
weight (200 gr.)	7-741-100-01

2. Performe the Sec. 2-2 so that the machine can be controled without threading a tape.

3. Perform the adjustments shown in Table 6-1.

	adjustment step	measuring reel table or measuring point	shorting points	tension scale	function mode	adjustment points	spec.
a	Take-up Reel Table Take-up Torque Adj. **see note 1**	T	REEL-1A TP1 TP2	200 gr.	REC PLAY	REEL-1A ⊘RV-1	150 ± 10 gr.
b	Supply Reel Table Take-up Torque Adj. **see note 1**	S	REEL-1A TP1 TP2	200 gr.	REC PLAY	REEL-1A ⊘RV-2	150 ± 10 gr.
c	(Single Pinch Roller Operation) Supply Reel Table Back Torque Adj. in FWD mode **see note 2**	REEL-1A TP5			with DT unit: 3 PLAY (PB Head Select) without DT unit: FWD 1/4	REEL-1A ⊘RV-4	0V ± 0.15V
d	(Single Pinch Roller Operation) Supply Reel Table Back Torque Adj. in REV mode **see note 3**	REEL-1A TP5			PROGRAMMED JOG mode with DT unit : REV1/5 without DT unit: REV 1/4	REEL-1A ⊘RV-5	4V ± 0.5V
e	Take-up Torque Adj. after the Tension released	REEL-1A TP5			STOP	REEL-1A ⊘RV-9	−2V to +3V
f	REV Search Back Torque Adj. **see note 3**	REEL-1A TP5			REV 10 fold Search Thread 10.5" reel and run to middle of the tape.	REEL-2A ⊘RV-2	4V ± 0.5V
g	Wound Tape Diameter Detection Adj. in FWD mode	REEL-1A TP4			• STOP • 9B/REEL-2A: HIGH • Turn the counter Roller to the left	REEL-1A ⊘RV-3	5.5V ± 0.1V
h	Wound Tape Diameter Detection Adj. in REV mode	REEL-1A TP4			• STOP • 9B/REEL-2A: LOW • Turn the Counter Roller to the right	REEL-1A ⊘RV-6	6.0V ± 0.1V

Table 6-1 Torque adjustment

Note: 1. To adjust a and b,
- Tie the "S" and "T" side Tension Arms to the Stoppers with strings as shown in Fig. 6-14.

2. To adjust c,
- Thread a 10.5 inches reel tape. Wind the same amount of tape to the supply and take-up reels.

3. To adjust d and f

① Install the Tension Alignment jig to the machine as shown in Fig. 6-15, then attach the weight (200 gr.) to the string.

② Set TENSION PINCH switch on the REEL AUX-A Board to OFF. Place machine in REC mode. Measure the voltage at pin-13B on the TENSION-A Board.

③ Place machine in the mode described on the Table 6-1. Adjust ⊘RV5 on board REEL-1A and ⊘RV2 on board REEL-2A respectively so that the voltage at TP5/REEL-1A equalize to the voltage at pin-13B/TENSION-A remembered in Step 2 .

④ After adjustment, set the TENSION PINCH Switch/REEL AUX-A Board to ON.

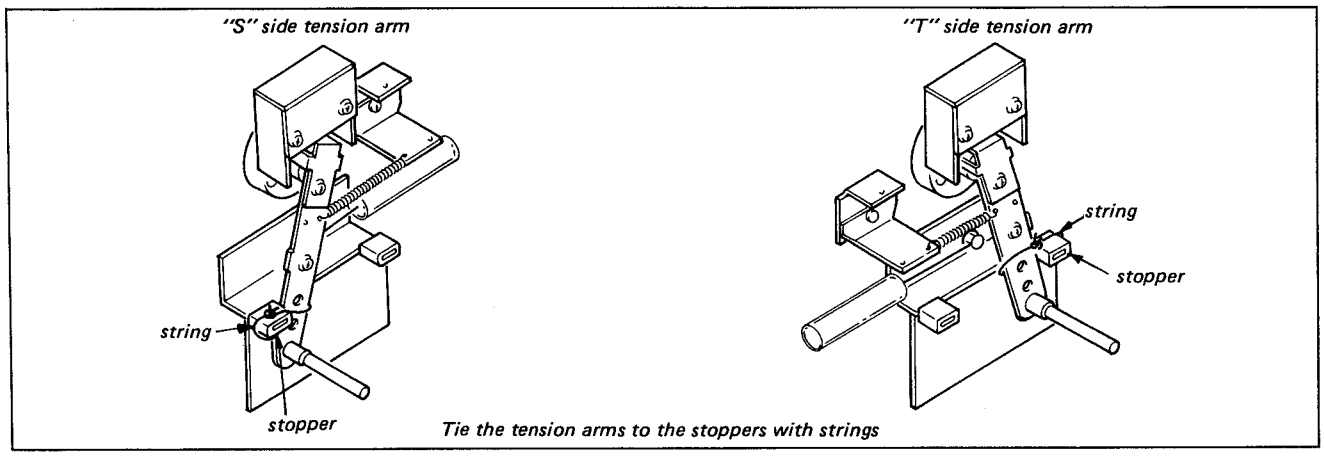

Fig. 6-14.

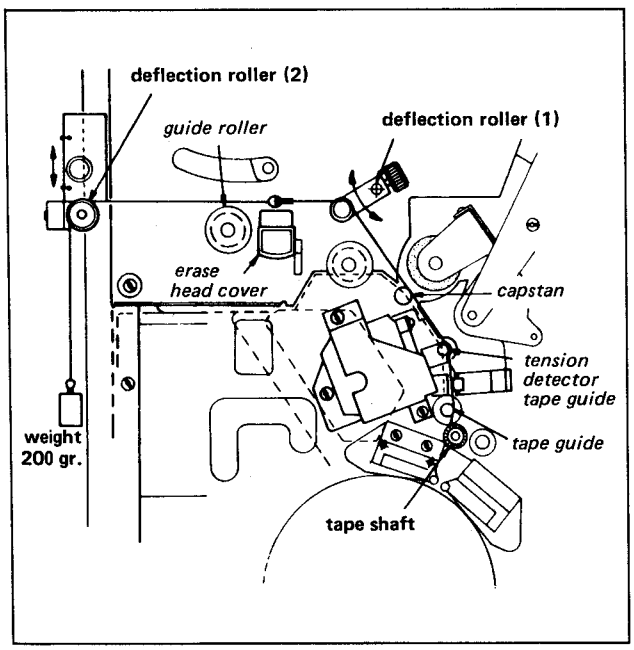

Fig. 6-15.

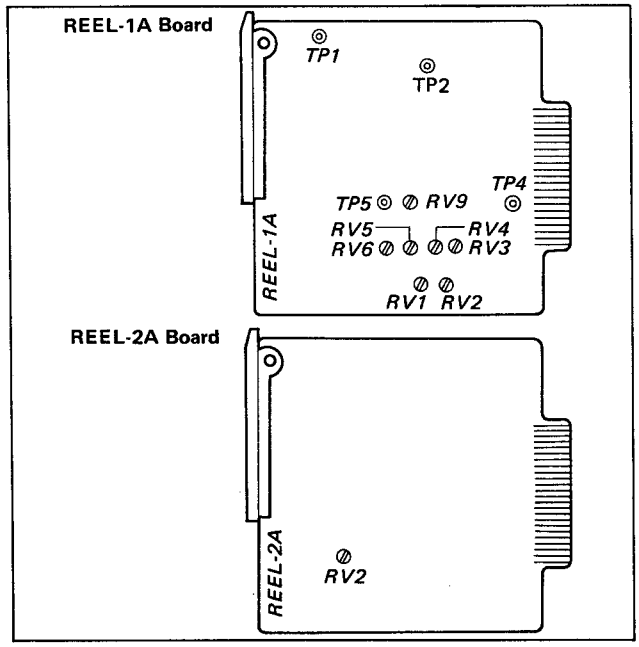

Fig. 6-16.

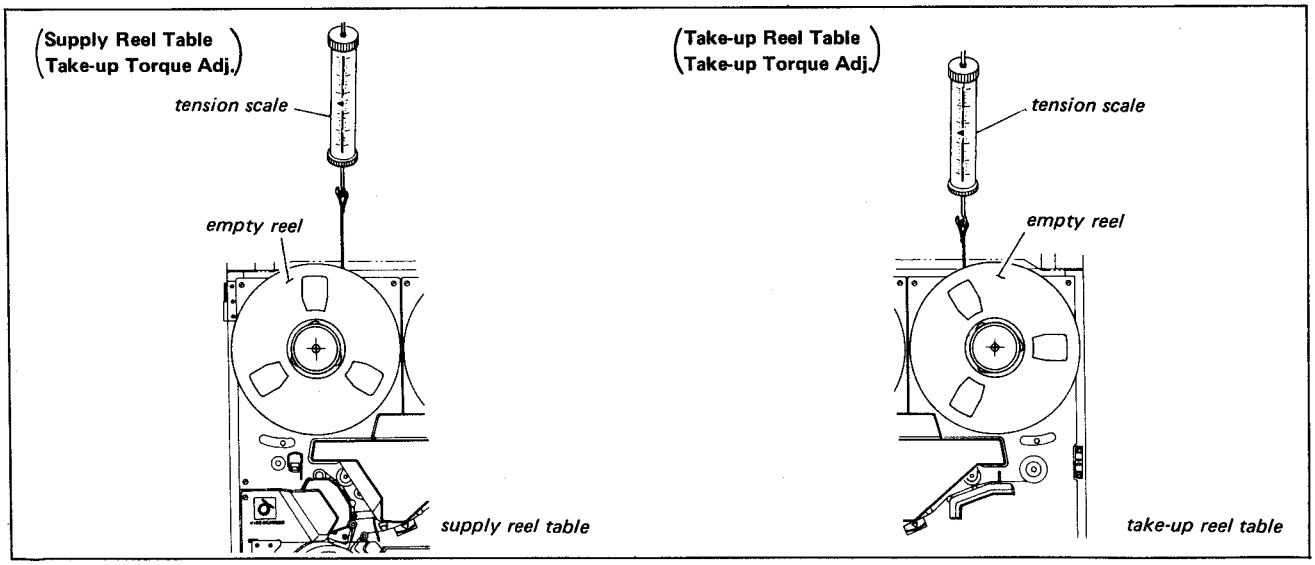

Fig. 6-17. Reel motor torque adjustment

C. Search Speed Adjustment

1. Place the REEL-2A Board on the Extension Board.
2. Connect scope to 17A on the REEL-2A Board.
3. Thread tape, run in F.FWD to middle of the tape. Put machine in 10 FOLD REV SEARCH mode. Check to see that the waveform at 17A/REEL-2A Board satisfies the specification shown in Fig. 6-18. If not, adjust ◐ RV4.

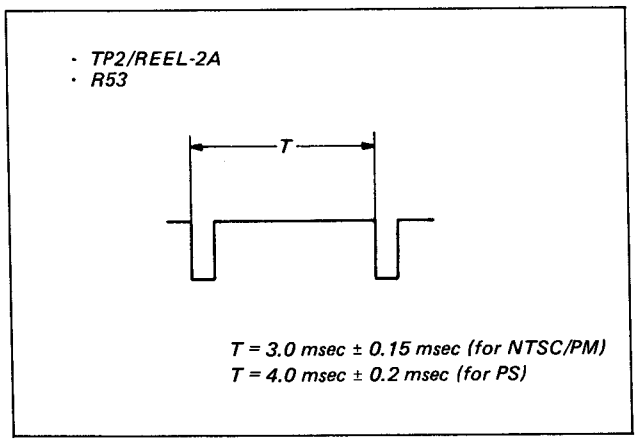

Fig. 6-18. Search speed adjustment

D. Quick Start Voltage Adjustment

- When tape starts quickly, the turning speed of Counter Roller may slow than the actual tape speed. Therefore the adjustment is to correct the difference.

1. Thread a tape, place machine in STANDBY mode
2. Check to see that the voltage at TP8 on the REEL-2A Board is 2.5 ± 0.15 volt.
3. Place machine in 2 FOLD PROGRAMMED JOG mode, confirm that the voltage at TP8/REEL-2A is the same as in Step 2 at the very moment when the tape has been started. If not, adjust ◐ RV-3 on the REEL-2A Board.

E. Full REV Torque Adjustment

1. Install the Tension Alignment Jig, then attach a 90 grams weight.
2. Set TENSION PINCH switch on the REEL AUX-A Board to OFF. Place machine in REC mode.
3. Check to see that the voltage at TP13B on the TENSION-A Board is 0 ± 0.3 volt.
4. Remove the Tension Alignment Jig. Thread a 10.5 inches reel tape and wind in F.FWD mode to middle of the tape. Confirm that the voltage at TP13B is the same as the specification in Step 3. If not, adjust ◐ RV-1 on the REEL-2A Board.

6-8. REEL TABLE PHOTO-COUPLER ADJUSTMENT

- This adjustment is required only after the photo-coupler is replaced.

1. Connect scope to TP3 and TP4 on the COUPLER-SA (or COUPLER-T) board.
2. Thread a tape and place machine in FWD 5 FOLD SEARCH mode.
3. Adjust the volume control ◐ R10 so that the waveform at TP4 satisfies the specification. If it cannot be satisfied, replace photo-coupler.

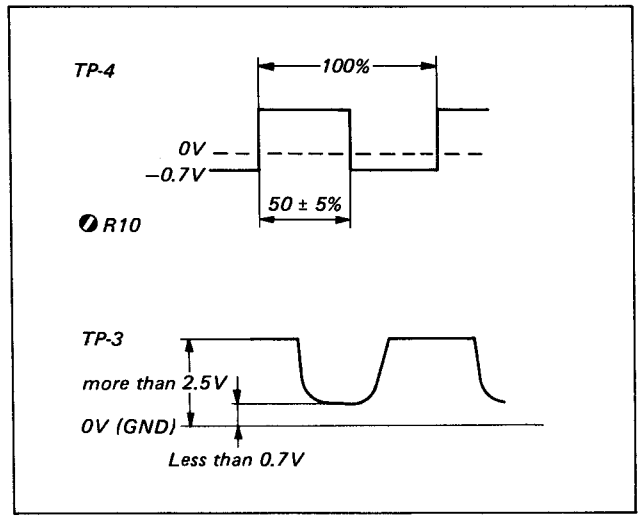

Fig. 6-19. COUPLER-S/T board adjustment

4. Place machine in the FULL FWD SEARCH mode, then check to see that the duty cycle of the waveform at the TP4 is 40% to 60%. If not, repeat step 1 to 4 until it is satisfied.

SECTION 7
TENSION SYSTEM ALIGNMENT

7-1. SUPPLY AIR DUMPER ADJUSTMENT

General Comment

a. If the Tension Arm vibrates excessively when the machine is switched from STOP to F.FWD or to REV mode, the following adjustments are required.

b. The adjustments consist of the following four items. Perform the adjustments in this order.
   A. Damping Speed Adjustment
   B. Air Damper Position Adjustment
   C. Arm Retaining Force Adjustment
   D. Tape Slack Detection Adjustment

c. Prepair a 90 gr. weight that is supplied as a part of the Tension Alignment Jig (SONY Part No. J-6040-320-A).

A. Damping Speed Adjustment

1. Remove nut from the Supply Air Damper shown in Fig. 7-1. Remove Air Damper from chassis.

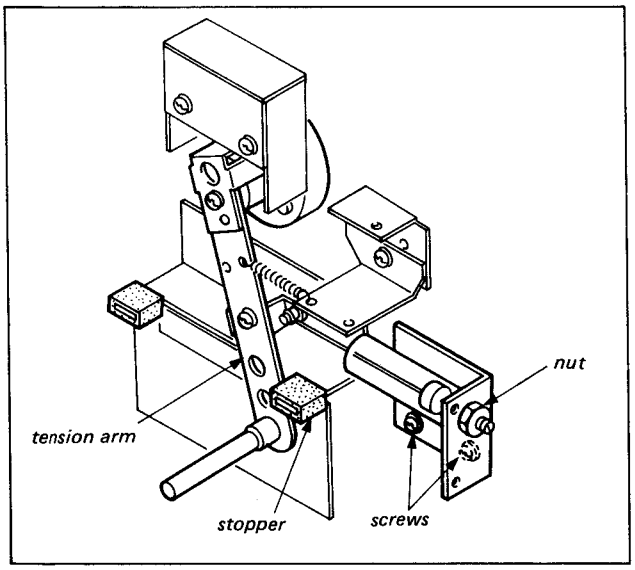

Fig. 7-1. "S" side air damper

2. Attach a 90 gr. weight to the Air Damper, holding the Air Damper vertical.

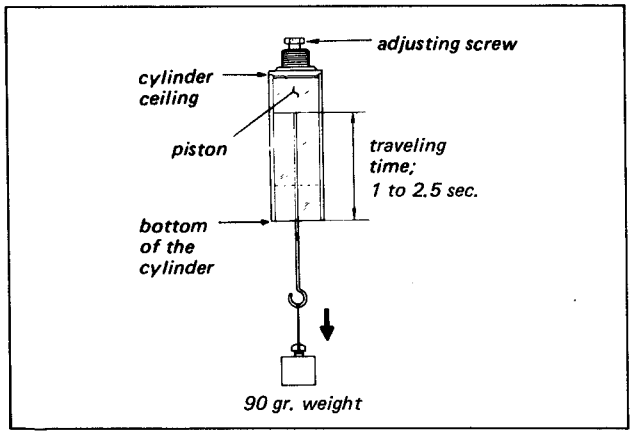

Fig. 7-2. Air damper speed adj.

3. Measure the time required for the piston to drop from the top of the cylinder to the bottom. Travel time should be 1 to 2.5 seconds. If not, adjust the adjusting screw shown in Fig. 7-2.

B. Air Damper Position Adjustment

1. Hold the Tension Arm against the Stopper as shown in Fig. 7-1.

2. Check to sec that the clearance between the ends of the piston and cylinder is 2 to 3 mm . If it is not satisfied, adjust the position of Cylinder Bracket shown in Fig. 7-3.

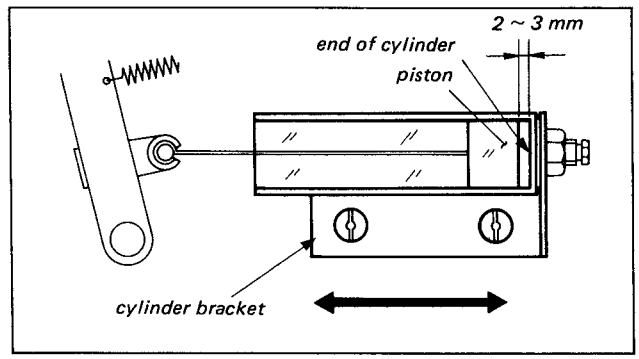

Fig. 7-3. "S" side air damper position adj.

C. Arm Retaining Force Adjustment

- Prepair the following adjustment tools

	SONY Part No.
tension gauge	7-732-050-01
eccentric driver	J-6040-070-A

1. Hold the tension gauge against the Tape Guide Shaft on the Tension Arm as shown in Fig. 7-4., then push the shaft in the direction of arrow by the tension gauge. Confirm that the gauge reading is 4 to 6 gr. at the moment when the Tension Arm is detached from the Stopper. If not, proceed to the following step.

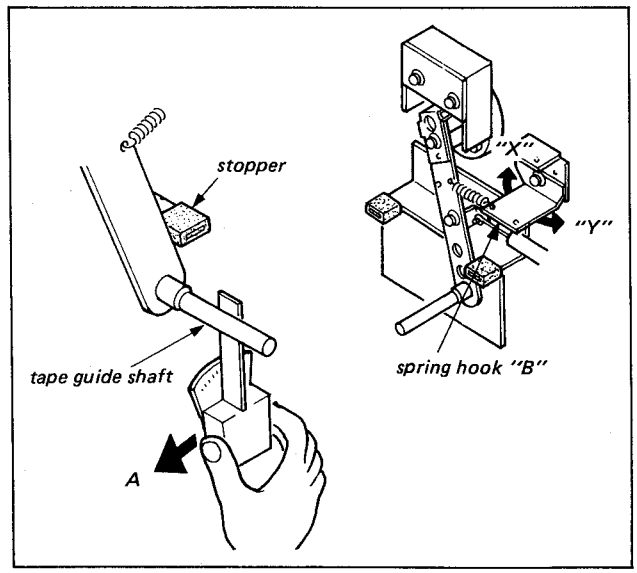

Fig. 7-4. "S" side arm retaining force adj.

2. Slightly loosen the screw securing the Spring Hook "B" in Fig. 7-4. Check the direction which Spring Hook "B" must be moved, then insert the eccentric screwdriver into one of the two adjusting holes and move the Spring Hook "B" in direction of "X" or "Y".
   a. If the scale reading is less than specified value, move the Spring Hook "B" in the direction of "Y".
   b If the scale reading is more than the specified value, move the Spring Hook "B" in the direction of "X".
3. Push the Tension Arm in direction of arrow A, then slightly release your hand from the Tension Arm, and check to see that the Tension Arm returns and contacts with the Stopper. (Repeat the step 2 or 3 times.)
4. Glue the screw securing Spring Hook "B" with locking compound.

D. Tape Slack Detection Position Adjustment

- Prepair the following adjustment tools.

oscilloscope
block gauge (2 mm in thickness) or thickness gauge

1. Insert the block gauge of 2 mm in thickness between "S" Tension Arm and Stopper as shown in Fig. 7-5. Put a rubber band on the Arm Shaft of "T" Tension Arm and the Counter Roller.
2. Connect scope to TP3 on the REEL-1A board, Confirm that the output is as shown in Fig. 7-6. If the output is always HIGH or LOW, adjust volume control ◐RV7/REEL-1A board.

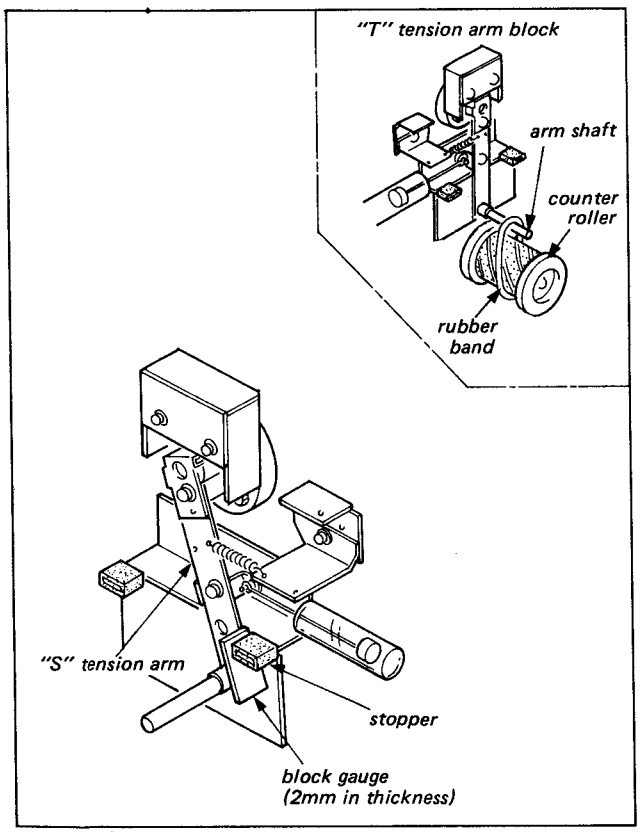

Fig. 7-5. "S" side tape slack detection position adj.

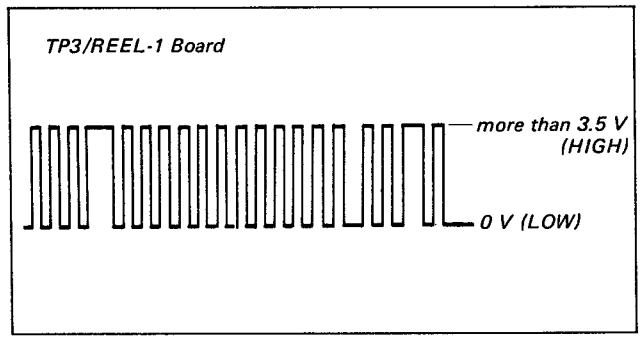

Fig. 7-6.

7-2. TAKE-UP AIR DAMPER ADJUSTMENT

General Comment

a. If the Tension Arm vibrates excessively when the machine is switched from STOP to F.FWD or to REV modes, the following adjustments are required.

b. The adjustments consist of the following four items. Perform the adjustments in this order.
   A. Damping Speed Adjustment
   B. Air Damper Position Adjustment
   C. Arm Retaining Force Adjustment
   D. Tape Slack Detection Adjustment

c. Prepair a 90 gr. weight that is supplied as a part of the Tension Alignment jig (SONY Part No. J-6040-320-A).

A. Damping Speed Adjustment

1. Remove nut shown in Fig. 7-7., then remove Air Damper from Chassis.
2. Adjust the travel time of the piston, referring to Sec. 7-1. ("S" side air damper damping speed adjustment.)

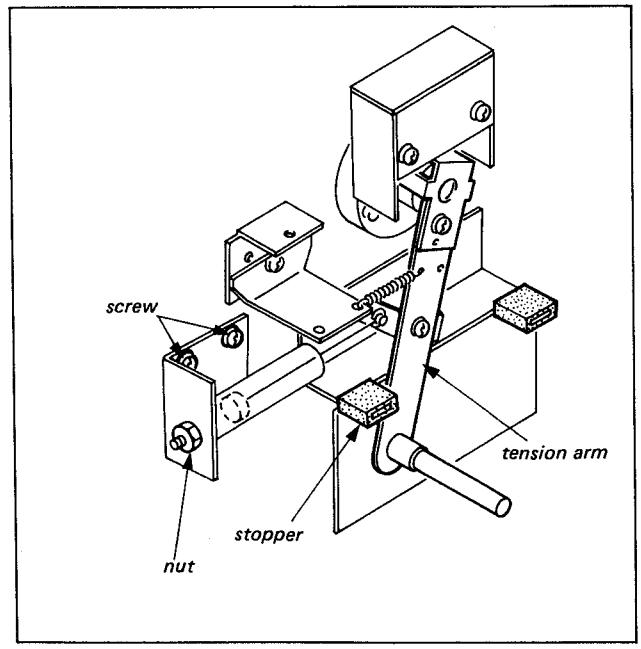

Fig. 7-7. "T" side air damper speed adj.

B. Air Damper Position Adjustment

1. Hold the Tension Arm against the Stopper as shown in Fig. 7-1.
2. Check to see that the clearance between the ends of the piston and cylinder is 2 to 3 mm. If it is not, adjust the position of Cylinder Bracket shown in Fig. 7-3.

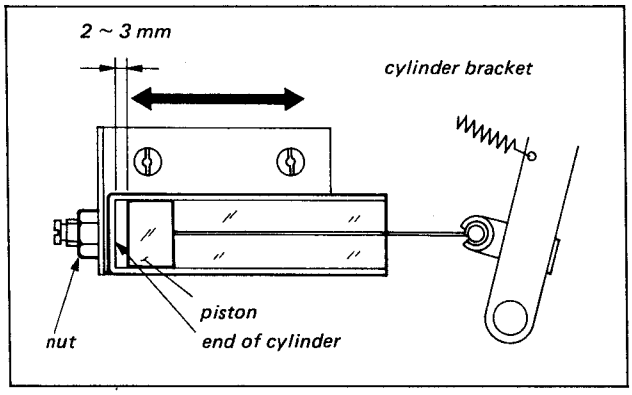

Fig. 7-8. Air damper position adj.

C. Arm Retaining Force Adjustment

- Prepair the following measurement tools.

	SONY Part No.
tension gauge	7-732-050-01
eccentric driver	J-6040-070-A

1. Hold the tension gauge against the Tape Guide Shaft on the Tension Arm, as shown in Fig. 7-9., then push the shaft to the arrow A by tension gauge. Confirm that the gauge reading is 4 to 6 gr. at the moment when the Tension Arm is detached from the Stopper. If not, proceed to the following adjustment.

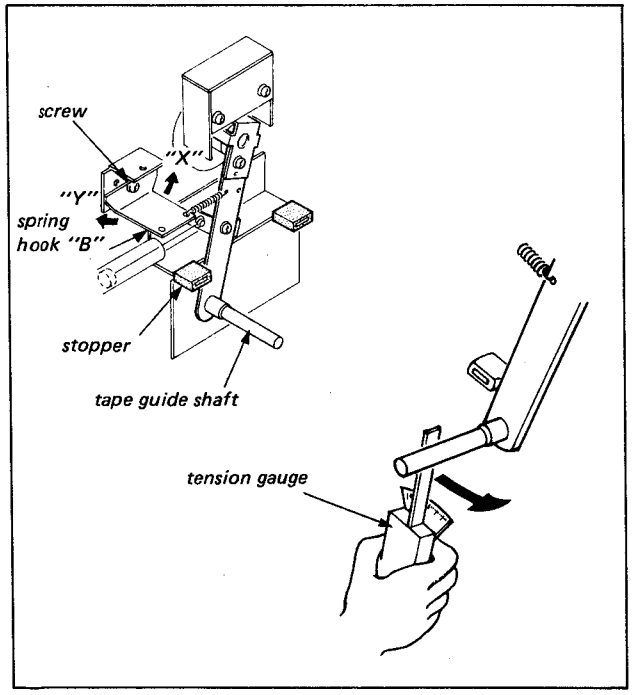

Fig. 7-9. "T" side arm retaining force adjustment

2. Slightly loosen the screw securing the Spring Hook "B" shown in Fig. 7-9. Check the direction which Spring Hook "B" must be moved, then insert the eccentric driver into one of the two adjusting holes and move the Spring Hook "B" in direction of "X" or "Y".
   a. If the scale reading is less than specified value, move the Spring Hook "B" in direction of "Y".
   b. If the scale reading is less than specified value, move the Spring Hook "B" in direction of "X".
3. Push the Tension Arm in direction of arrow A, then gradually release your hand from the Tension Arm, and check to see that the Tension Arm returns and contacts with the Stopper. (Repeat this step 2 or 3 times).
4. Glue the screw securing Spring Hook "B" with locking compound.

D. Tape Slack Detection Position Adjustment

- Prepair the following measurement tools.

oscilloscope
block gauge (2 mm in thickness) or thickness gauge

1. Insert the block gauge of 2 mm in thickness between "T" Tension Arm and stopper as shown in Fig. 7-10.
2. Put a rubber band on the Arm Shaft of "S" Tension Arm and the Guide Roller, as shown in Fig. 7-10.
3. Connect scope to TP3 on the REEL-1A board, Check to see that the output satisfies the specification in Fig. 7-6. If the output is always HIGH or LOW, adjust ◐RV8/REEL-1A board.

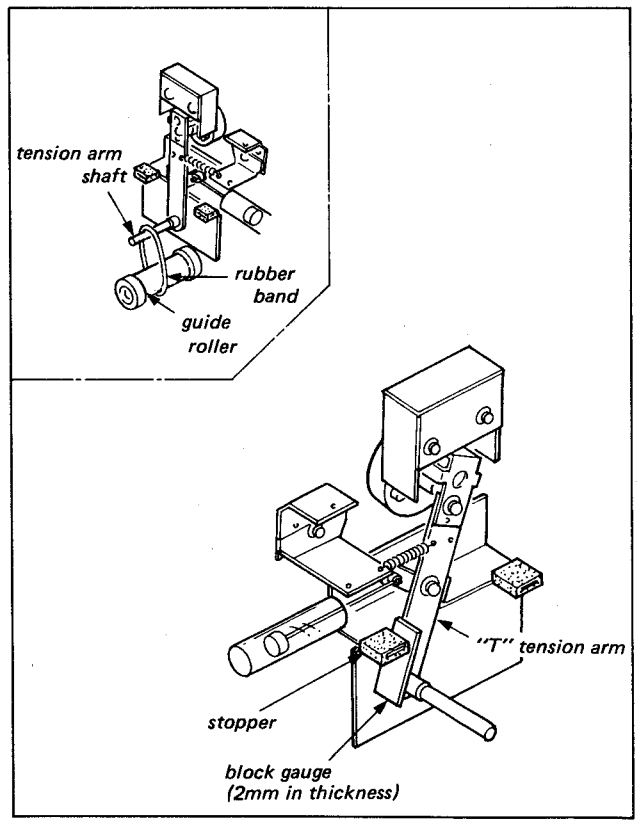

Fig. 7-10. "T" side tape slack detection

7-3. TENSION DETECTOR ADJUSTMENT

a. BVH-1100A, employs a tension detecting device for maintaining constant tape tension in the servo loop (around the Head Drum Assembly) in both the REC and PB modes. It senses tape tension and controls the rotation of the supply capstan in order to keep the tape tension constant.

b. Because of the weight of the tape guide and other parts, tape tension around the drum assembly is different when the machine is operated in the vertical position than in the horizontal position. If the position of the machine is changed, this adjustment is necessary.

c. Prepare the following tool.

	SONY Part No.
tension alignment jig	J-6040-320-A

Simple Check

1. Play back an alignment tape (BR5-2) and check the skew on the monitor. If skew is incorrect, perform the following step.
2. Play back an alignment tape (BR5-2) and pull out the skew control on the TENSION-A Board (in the AMP chassis) in order to release the Auto Skew function.
3. While observing the monitor, turn the skew control, check that the correct skew can be adjusted within the variable range of the skew control shown in Fig. 7-11.

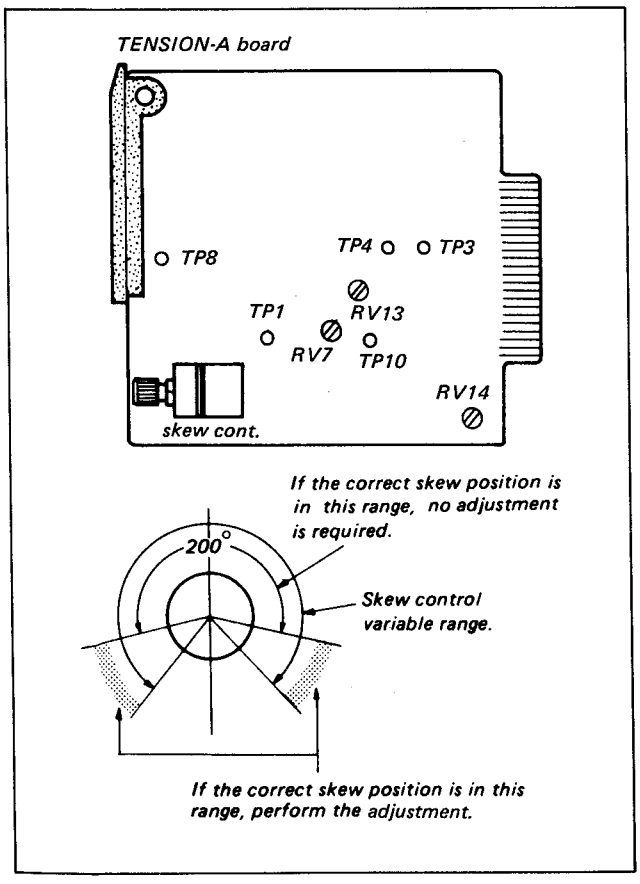

Fig. 7-11. Tension detection adj.

Jig Setting

4. Remove the Pinch Cover (Sec. 2-2)
5. Install Deflection Roller (1) on the Pinch Cover Shaft and the Deflection Roller (2) on the Side Sash in Fig. 7-12.

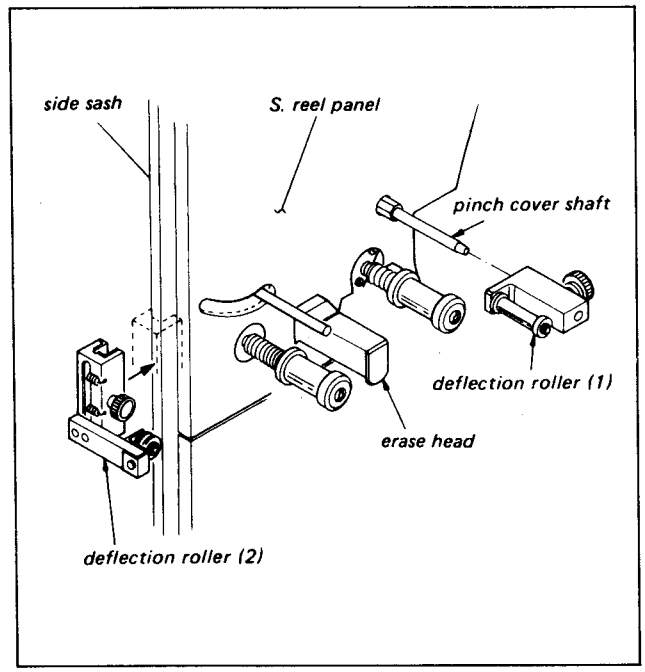

Fig. 7-12. Tension alignment jig setting

6. Unroll tape from Tape Shaft and install the shaft into the hole shown in Fig. 7-13. by turning knob A.

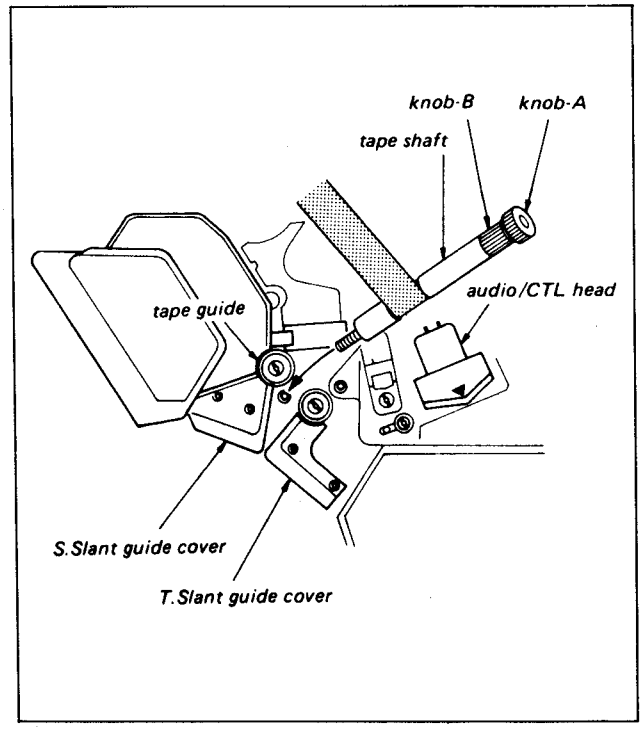

Fig. 7-13. Tension alignment jig setting

7. Thread the tape from the Tape Shaft and attach a 90 gr weight to the end of the tape as shown in Fig. 7-14.

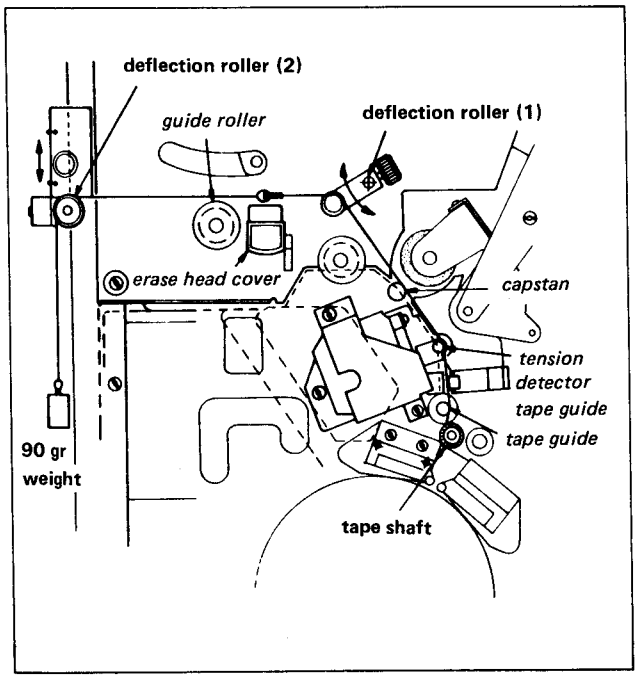

Fig. 7-14. Tension alignment jig setting

8. Loosen knob A of the Tape Shaft and adjust knob B so that the tape comes out from the Tape Shaft in the direction shown in Fig. 7-15. Then tighten knob A.

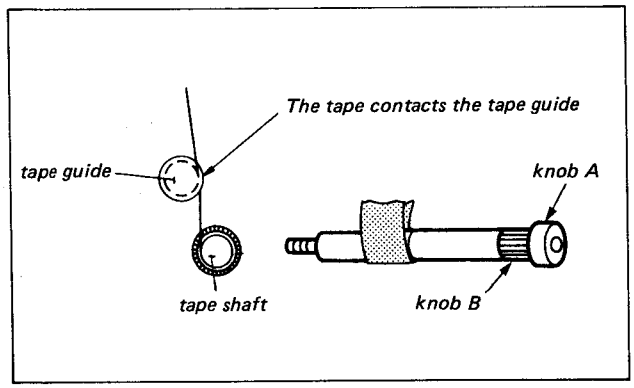

Fig. 7-15. Tension detector adjustment (jig setting)

9. Move Deflection Roller (1) in the direction indicated by the arrow shown in Fig. 7-14. so that the tape contacts the Capstan Shaft.

10. Move Deflection Roller (2) in the direction of the arrow shown in Fig. 7-14. so that the tape and the string touch neither the Erase Head Cover nor the Guide Roller.

Tension-A Board & Tension Detector Adjustment

11. Turn off the Tension Pinch Switch on the REEL AUX-A Board. Short circuit TP1 and TP2 on the REEL-1A Board.

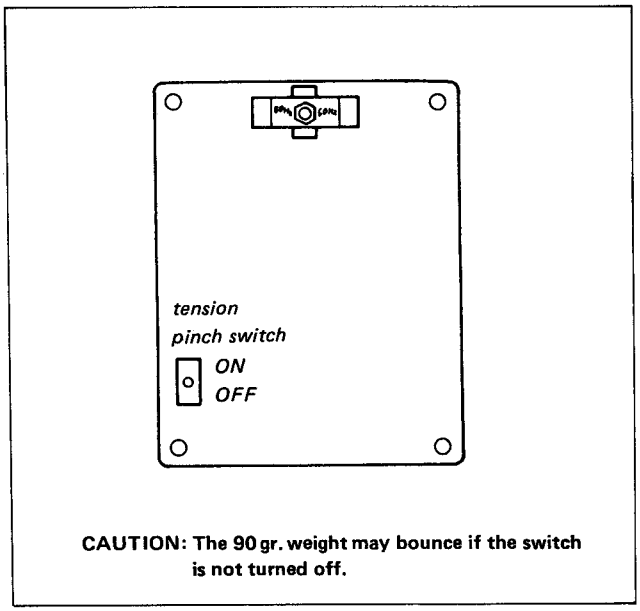

CAUTION: The 90 gr. weight may bounce if the switch is not turned off.

Fig. 7-16. Location of REEL AUX-A board

12. Put the TENSION-A Board on the Extension Board. Short circuit TP3 and TP4 on the TENSION-A Board with a short clip lead. (The Tension Detector is electrically set in the center of the variable range.) See Fig. 7-11. Short circuit between the anode of D23 and Ground on the TENSION-A Board. Set the PB EE Select Switch to PB/EE position.

13. Check that the dc potential difference between TP8 and TP1 is [0 ± 50 mV]. If not, adjust [RV13] on the TENSION-A Board.

14. Put machine into RECORD mode.

15. Check for [6 V ± 0.2 V] at TP10. If not, adjust [RV14].

16. Connect a frequency counter to TP19A of the Extension Board. Confirm that the counter reading satisfies the specification below. If not, adjust [RV7] on the TENSION-A Board.

Specification:
- NTSC, PM model: 53.708 kHz ± 0.02 kHz
- PS model: 52.80 kHz ± 0.02 kHz

17. Put machine into STOP mode.

18. Remove the two short clip leads from TENSION-A Board.

19. Put machine into RECORD mode.

20. Hold the 90 grams weight up, then lower the weight gently until weight becomes still.

21. Confirm that counter reading satisfies the specification below. If not, perform the following adjustments.

Specification:
- NTSC, PM model: 53.708 kHz ± 0.02 kHz
- PS model: 52.80 kHz ± 0.02 kHz

22. Put machine into STOP mode, and remove the Drum Panel.

23. Put machine into RECORD mode. Adjust the Tension Detector assembly so that the frequency counter reading satisfies the specification shown in Fig. 7-17.

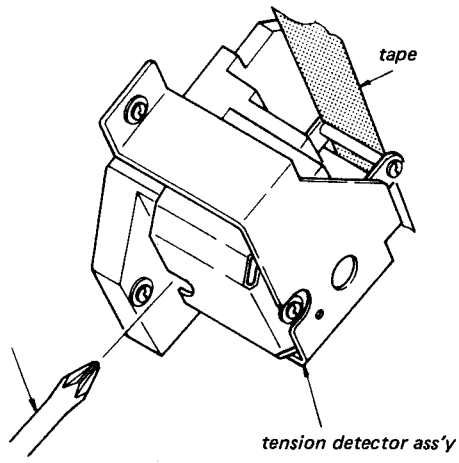

Specification:
- *NTSC, PM model: 53.708 kHz ± 0.02 kHz*
- *PS model: 52.80 kHz ± 0.02 kHz*

Fig. 7-17. Tension detector ass'y adj.

24. Put machine into STOP mode. Connect digital voltmeter to TP13B and ground on the Extension Board (TENSION-A Board). Set the digital voltmeter to dc volt measurement mode.
25. Short circuit TP3 and TP4 on the TENSION-A Board again.
26. Put machine into RECORD mode.
27. Remember the digital voltmeter reading (V1).
28. Put machine into STOP mode, remove the Tape Shaft and 90 grams weight.
29. Remove the short clip lead from TP3 and TP4.
30. Put machine into RECORD mode.
31. Confirm that the digital voltmeter indicates [V1 −4 ± 0.2 volt]. If not, adjust the [RV4] on the TENSION-A Board.
32. Put machine into STOP mode.
33. Install the Tape Shaft again and attach [200 grams] weight to the end of the tape.
34. Put machine in REV 1/4 FOLD SHUTTLE mode, Remember the digital voltmeter reading (V2).
35. Put machine in STOP mode and remove the Tension Alignment jigs.
36. Set the Tension Pinch switch on the REEL AUX-A Board to ON position. Remove the short clip lead from TP1 and TP2 on the REEL-1A Board. Thread a tape.
37. Put machine into REV 1/4 FOLD SHUTTLE mode. Confirm that the digital voltmeter indicates [V2 ± 0.3 volt]. If not, adjust [RV5] on the TENSION-A Board.

SECTION 8
CAPSTAN SYSTEM ALIGNMENT

8-1. PINCH ROLLER SLANT ADJUSTMENT

- This adjustment is precisely factory-calibrated before shipment so that tape runs smoothly without giving any bit of scar on tape. This adjustment should be neccessary only after the Pinch Roller is replaced.
- This adjustment consists of following two items. Adjust them in this order.
  A. Azimuth Adj.
  B. Inclination Adj.

Prepair the following tool.

	SONY Part No.
Flat plate	J-6040-160-A

A. AZIMUTH ADJ.

1. Press the Flat Plate on the surface of the Pinch Roller and Capstan so that there is no clearance between the Flat Plate and the Capstan. Observe the clearance in direction "B" then press the jig on the oposite side of the Capstan (Dotted line). Check to see that the clearance between the jig and Pinch Roller is satisfied the specification shown in Fig. 8-2 (iii). If not, adjust as following procedure.

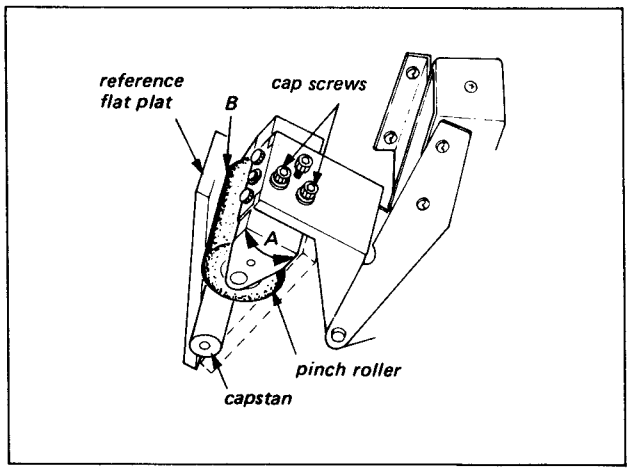

Fig. 8-1. Pinch roller azimuth adjustment

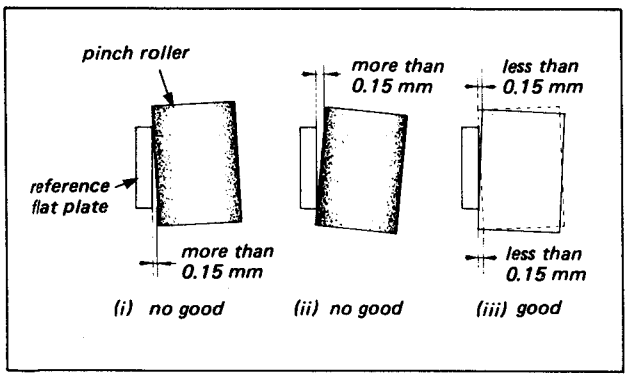

Fig. 8-2. Pinch roller azimuth error

2. Loosen the two cap screws shown in Fig. 8-1. Adjust the Pinch Roller by moving it in the direction "A".
3. Tighten the two cap screws, and again check Pinch Roller azimuth.

B. SLANT ADJ.

1. Lightly press the Pinch Lever against the Capstan, observe the relative position of the Pinch Roller as viewed from "C" against the Capstan. Confirm that the clearance is satisfied the specification in Fig. 8-4 (iii). at the moment when the Pinch Roller contacts to the Capstan.

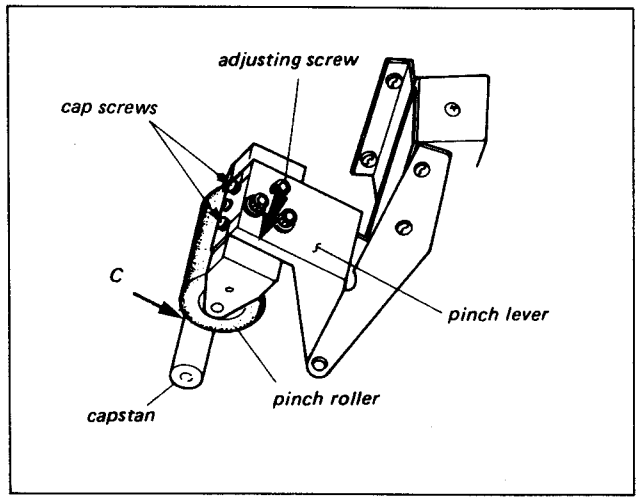

Fig. 8-3. Pinch roller slant adjustment

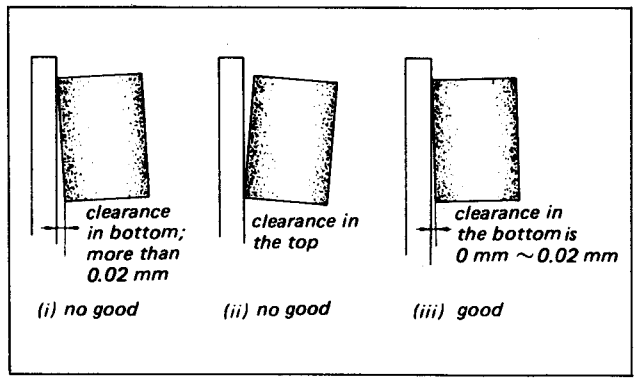

Fig. 8-4. Pinch roller slant adjustment

2. If Pinch Roller adjustment is neccessary, loosen the two cap screws, and turn the adjusting screw shown in Fig. 8-3.
3. After adjustment, tighten the two cap screws and again check the Pinch Roller slant.

8-2. PINCH SOLENOID STROKE ADJUSTMENT

- This adjustment is usually required only after the Pinch Solenoid is replaced. Possible Pinch Solenoid stroke troubles are (i) the Pinch Solenoid does not energize, (ii) tape speed is slow, or (iii) tape tension is incorrect.

1. Set up the PLAY mode to energize the Pinch Roller without threading tape. Refer to Section 2-2.
2. Try to move the Pinch plunger to confirm that the Solenoid is energized.
3. Check to see that clearance between the end of the slot of the Guide Plate and the Guide Pin is 5.5 ~ 6.5 mm. If not, adjust the Guide Plate position for that range of value.

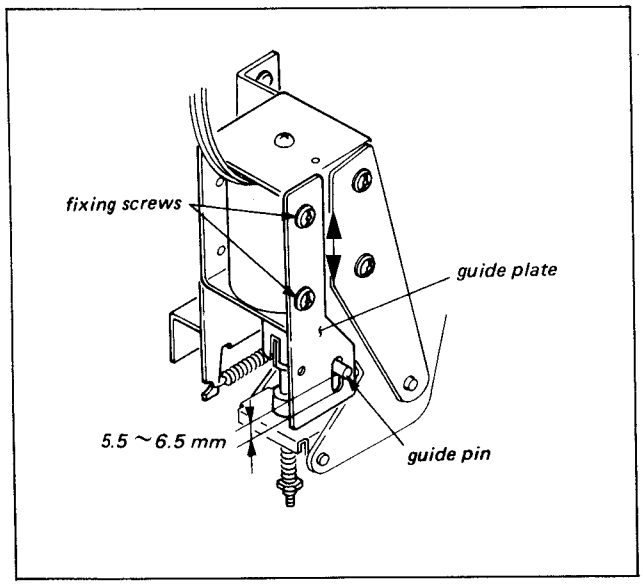

Fig. 8-5. Pinch solenoid stroke adjustment

8-3. TAPE ADVANCE POWER ADJUSTMENT

Adjustment is usually reguired only after the Pinch Roller solenoid is replaced. Possible Tape Advance Power Trouble are, tape speed is slow, or other adverse effects on tape running.

Pinch Lever Stopper Adjustment

1. Set up the PLAY mode without threading tape. Refer to section 2-2.
2. Check to see that clearance in Fig. 8-6. (between the Pinch Lever Stopper and the Pinch Lever) is between 0.2 mm ~ 0.4 mm. If not, loosen the set screw and adjust the Pinch Lever Stopper position.

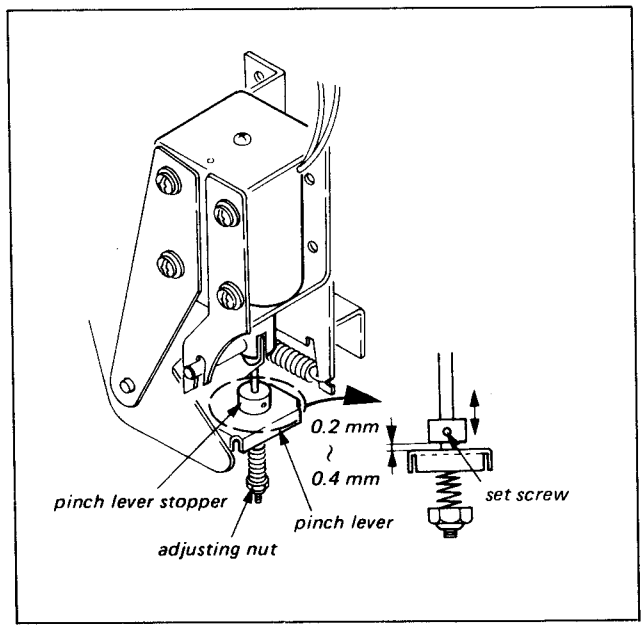

Fig. 8-6. Tape advancing power adj. (PLAY mode without tape)

"S" side Pinch Roller Pressure Adjustment

3. Make up a jig-string as shown in Fig. 8-7.

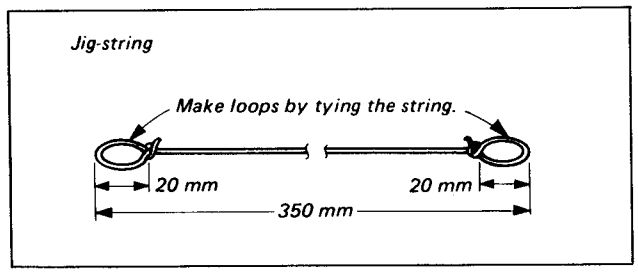

Fig. 8-7. Jig-string for measurement

4. Attach one end of the jig-string to the "S" side Pinch Lever Shaft and attach a tension scale (5 kg full scale) to the other end. Pull the tension scale in the direction shown in Fig. 8-8. so that the Pinch Roller is slightly apart from the Capstan. After Pinch Roller has stopped turning, move the tension scale closer to the Capstan and take a reading at the moment the Pinch Roller starts turning. The scale reading should be 3 kg to 3.4 kg. If not, adjust it by the adjusting nut shown in Fig. 8-8.

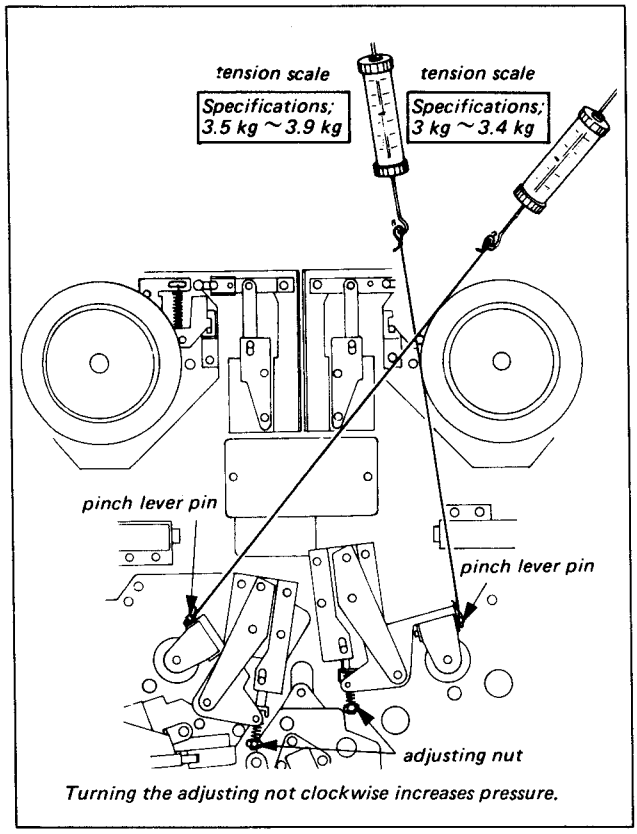

Fig. 8-8. Tape advance power adj.

"T" side Pinch Roller Pressure Adjustment

5. Attach one end of the jig-string to the "T" side Pinch Lever shaft and attach a tension scale (5 kg full scale) to the other end.

6. Perform the measurment as in step 4, and confirm that the scale reading is 3.5 kg to 3.9 kg. If not, adjust it by the adjusting nut shown in Fig. 8-8.

8-4. PINCH LEVER STOPPER POSITION ADJUSTMENT

The adjustment is required only when the pinch roller solenoid is replaced or Pinch Roller pressure is adjusted.

1. Without threading tape, place the machine in PLAY mode to energize the Pinch Solenoid.

2. Check that the Pinch plunger is being energized.

3. Check to see that clearance in Fig. 8-9. (between the Pinch Lever Stopper and the Pinch Lever) is between 0.2 mm to 0.4 mm. If not, loosen the set screw and adjust the Pinch Lever Stopper position.

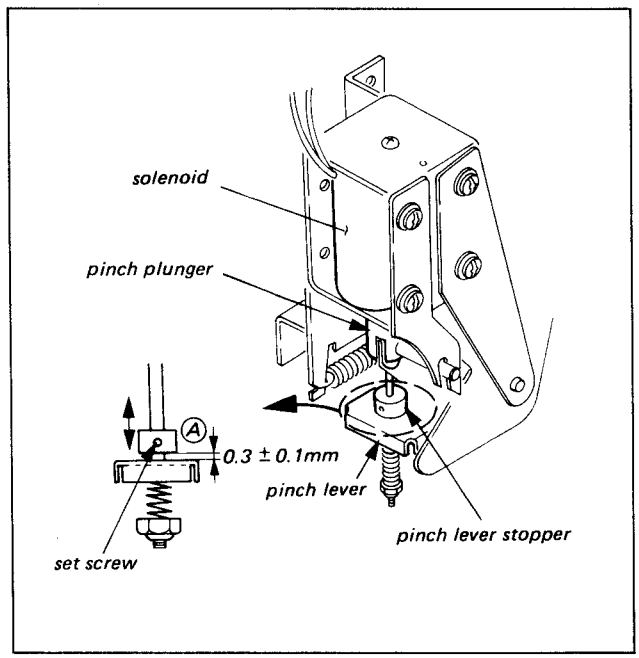

Fig. 8-9. Pinch lever stopper adj.

SECTION 9
DRUM SYSTEM ALIGNMENT

9-1. UPPER DRUM ECCENTRICITY ADJUSTMENT

- If the Upper Drum is not accurately centered in the head drum assembly, jitter and other adverse effect can be caused.
- This adjustment should be made when the upper drum is replaced. For replacement of the upper drum, refer to Sec. 5-1.
- Prepare the following measurement tools.

	SONY Part No.
• upper drum eccentricity	J-6040-750-B
• tapered screw	J-6040-460-A

- Before the following eccentricity adjustment, properly place the upper drum on the lower drum using the jig (tapered screws), and temporarily tighten it with two cap screws.

1. Check to see that the upper drum is temporality tighten with two cap screws with M4 spring washers and flat washers as shown in Fig. 9-1.

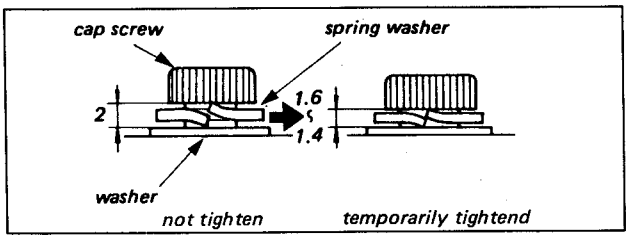

Fig. 9-1. Temporary tightening of cap screw

2. Check to see that the tip of the probe of the jig is at the center of the white plastic pin inserted in the measurement arm. If not, bend the probe in the direction shown by the arrows in Fig. 9-2.

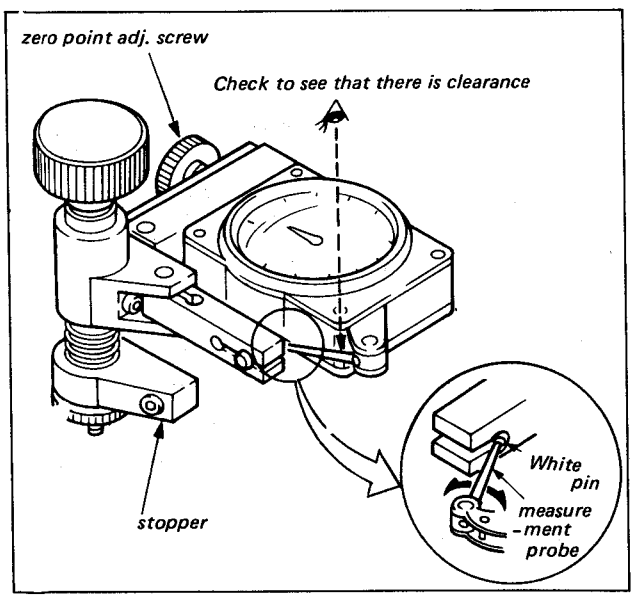

Fig. 9-2. Adjustment of the jig

3. Turn the zero point adjusting screw of the jig fully counter-clockwise. Attach the jig to the lower drum while holding the stopper (shown in Fig. 9-2.) to the lower side of the lower drum.

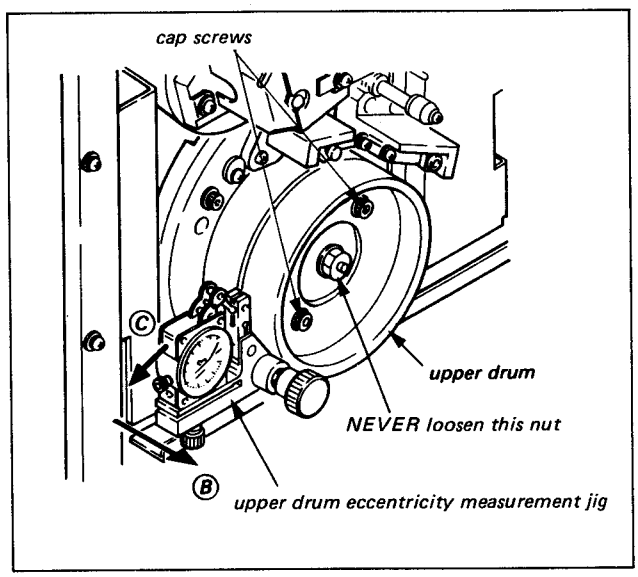

Fig. 9-3. Upper drum eccentricity adj.

4. Turn the gauge in the Ⓒ direction and then pull the gauge in Ⓑ direction.
5. Adjust the zero point adjusting screw of the jig so that the needle of the dial gauge points to zero.
6. Turn the Upper Drum slowly with the finger clockwise while reading the gauge. The gauge reading should be nearly constant with a deviation of no more than 3 μm. If the deviation exceeds 3 μm, adjust as follows.

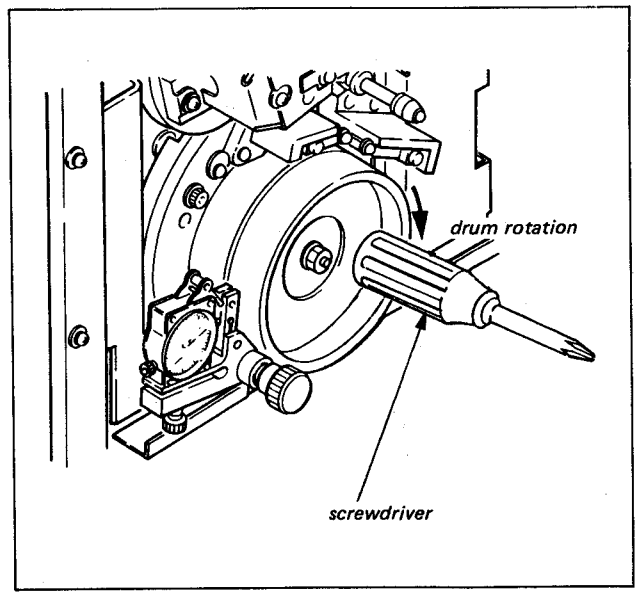

Fig. 9-4. Upper drum eccentricity adj.

7. Turn the upper drum until the gauge indicates maximum value. With a nylon hammer or screwdriver handle, lightly tap the inside of the upper drum opposite to the jig until the gauge reading is about 1/3 of the maximum value.

8. Turn the upper drum again by hand to find the position where the gauge now indicates the maximum value, and repeat step 7. Repeat steps 7 and 8 until the gauge reading is within 3 μm.

9. Alternately tighten the two cap screws in small increments.

10. Check eccentricity. Turn the zero point screw of the jig fully counterclockwise, then remove the jig.

11. Perform the following adjustments in this order.

    10-3 Tracking Check
    10-4 Audio Head Height Adj.
    10-5 Audio Head Phase Adj.
    10-7 Audio/CTL Head Position Adj.
    9-2 PG Coil Position Adj.
    Electrical Alignment

9-2. PULSE GENERATOR PHASE ADJUSTMENT

- This adjustment is precisely set at the factory. Adjustment is normally required only when the Upper Drum (rotary head ass'y) is replaced or the Audio/CTL Head is replaced or adjusted its position.
- If the Upper Drum or the Drum Assembly is replaced the following adjustments should be completed prior to performing the Pulse Generator Phase Adjustment.
  - (i) Upper Drum Eccentricity Adjustment (sec. 9-1.)
  - (ii) Audio Head Height Adjustment (sec. 10-4.)
  - (iii) Audio Phase Adjustment (sec. 10-5.)
  - (iv) Audio/CTL Head Position Adjustment (sec. 10-7.)
- This adjustment consists of following adjustments perform these adjustments in this order.
  - A. PG Phase Adjustment in Play-back mode by R/P head
  - B. PG Phase Adjustment in Play-back mode by PLAY head

A. PG Phase Adjustment in play-back mode by R/P head.

1. Set the following switches.
   - PB HEAD SELECT SW (on Sub-Control Panel): 1 (R/P)
   - INT, ADV. SW (on SYNC PULSE board): OFF
2. Short the following points on the DRUM board as shown in Fig. 9-5. (Auto PG : OFF)
   - TP-10 ◄——► E-4

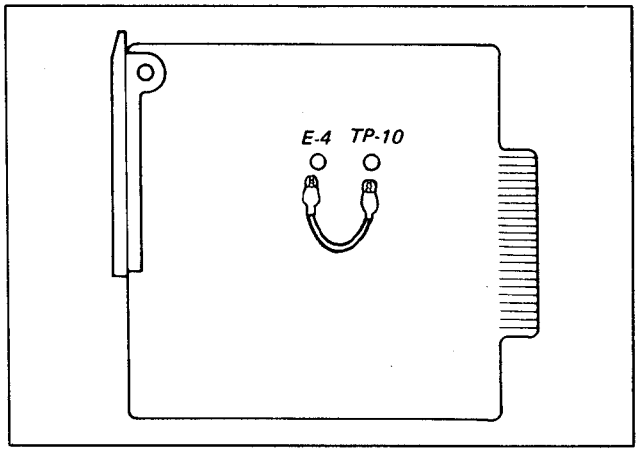

Fig. 9-5. DRUM printed board setting for PG position Adj.

3. Connect scope as follows.
   CH-1: to VIDEO IN on the Video Connector Panel
   CH-2: to VIDEO OUT on the Video Connector Panel
   TRIG: to FRAME PULSE on the Video Connector Panel (Set the SW 3 on the SYNC PULSE board to REF FRAME position).
4. Play back a color bar segment of the alignment tape (BR5-2, /BR5-2PS/BR5-2PM).
5. Adjust phase difference between INPUT VIDEO and OUTPUT VIDEO by turning the following volume control. Refer to Fig. 9-6.
   ● : R129 (on SYNC PULSE board)
   Spec: ±1 μsec or less

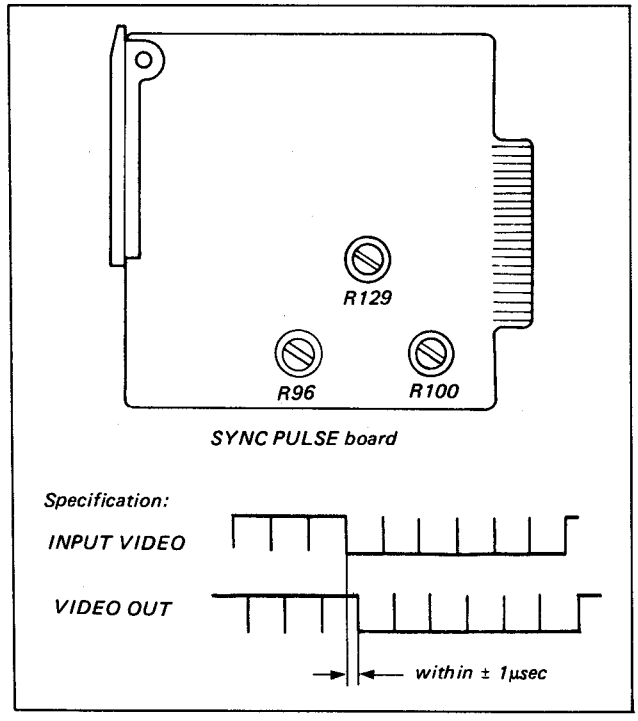

Fig. 9-6.

6. If the phase difference cannot be adjusted in the variable range of R129, the PG Bracket must be moved as follows.

   ① Set the R129 on the SYNC PULSE board to the mechanical center position.

   ② Turn power off. Loosen the two securing screws shown in Fig. 9-7., enough to shift the PG Bracket.

   ③ Turn power on again. Play pack the Alignment Tape (BR5-2/BR5-2PS/BR5-2PM), then move the PG Bracket toward "A" or "B", while pressing it toward the PG Wheel, until the phase difference is within the specification described in step 5. Refer to Fig. 9-7.

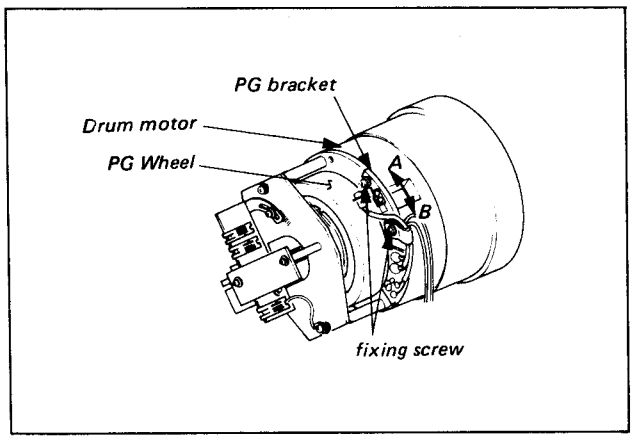

Fig. 9-7.

7. If the mechanical position of the PG coil has been moved, confirm that the phase difference between TP-8 and TP-9 is satisfied the following specification. If not, adjust it as following procedures.

   ① Remove the DT-2 board, if there is.

   ② Connect the oscilloscope as follows.
   CH-1: TP-8 (on the SYNC PULSE board)
   CH-2: TP-9 (on the SYNC PULSE board)
   TRIG: CH-1 (positive going edge of TP-8 pulse)

   ③ Specification and adjustment volume control are as follows.
   Specification: within t = ± 1/4 T

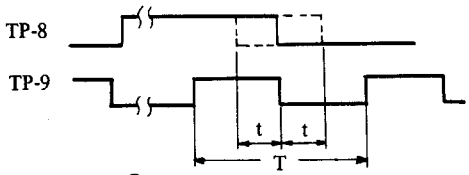

adjustment: ◐ R96

B. PG Phase Adjustment in play-back mode by the PLAY head.

1. Set the following switches as follows.
   - PB HEAD SELECT SW (on Sub Control Panel): 2(PLAY)
   - INT. ADV. SW (on SYNC PULSE board): OFF

2. Short the following points on the Drum board as shown in Fig. 9-5.
   - TP-10 ◄——► E-4

3. Connect scope as follows.
   CH-1: to VIDEO IN on the Video Connector Panel
   CH-2: to VIDEO OUT on the Video Connector Panel
   TRIG: to FRAME PULSE on the Video Connector Panel (Select the SW3 on the SYNC PULSE board to REF FRAME position)

4. Play back a color bar segment of an alignment tape.

5. Adjust the phase difference between VIDEO IN and OUTPUT VIDEO by turning the following volume control. Refer to Fig. 9-6.
   ◐ R100 (on SYNC PULSE board)
   Spec: ±1μ sec or less

6. If the phase difference can not be adjusted in the variable range of R100, readjust the phase between TP-8 and TP-9 on the SYNC PULSE board as follows.

   ① Connect a scope as follows.
   CH-1: TP-8 (on the SYNC PULSE board)
   CH-2: TP-9 (on the SYNC PULSE board)
   TRIG: CH-1 (positive going edge of TP-8)

   ② When the negative going edges of TP-8 and TP-9 coincide with each other, or are within ±1/4 period of FG pulse as shown in following figure, turn the volume control ◐ R96 on the SYNC PULSE board so that the negative going edge of TP-8 coincides with the adjacent edge "A" or "B" of TP-9.

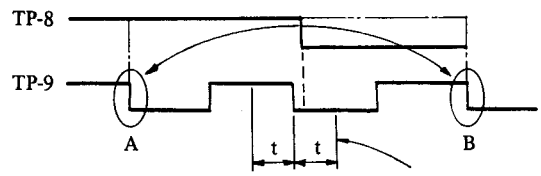

1/4 period of FG pulse

7. Repeat step 3 to 5 so that the phase of VIDEO IN signal coincides with that of VIDEO OUT signal.
   If it cannot be adjusted again, repeat step 6. However if you have attempted that the negative going edge of TP-8 coincided with "A" of TP-9 before, you should be tried that the negative going edge of TP-8 coincides with "B" of TP-9.

8. - Reset the INT. ADV switch (on the SYNC PULSE board) to ON.
   - Remove the shorting clip on the DRUM board.
   - Reset the SW 3 on the SYNC PULSE board to PB COLOR FRAME.

9-3. RECORD TEST

The video system is illustrated by the block diagram as below.

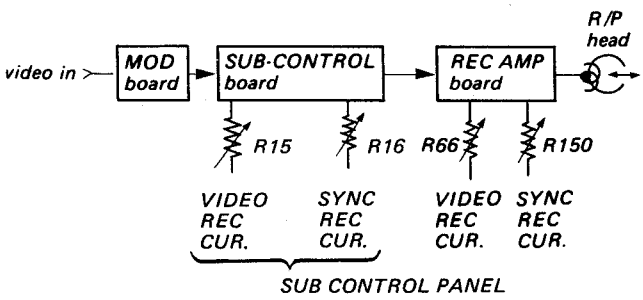

- The record current frequency response is adjusted by R66/R150 on the REC AMP board using the tape having magnetic characteristics of mean value at the factory. However, record current should be optimized in order to assure maximum S/N ratio from particular tape being used. The optimization is accomplished by means of volume controls on the Sub-Control panel. Refer to the electrical adjustment section for more exhaustive record current adjustment.
- The record test has following two methods.
  A. REC/PB Cycle Repetition Record Test: The machine automatically repeats the Record and the Playback with interval of 0.7 to 1 second in the STILL mode. The meter indicates the RF output in the Playback mode; accordingly the record current is easily optimized.
  B. Manual Record Test: The Record and the Playback can be manually changed by the EDIT button operation in the STILL mode. (The interval of the Playback mode can be arbitrarily changed by the EDIT button operation); accordingly the relation between the picture quality and the record current can be easily checked.

A. REC/PB Cycle Repetition Record Test:

1. Thread a blank tape and feed a color bar signal to the VIDEO IN connector. Set the REC CURRENT switch to SYNC.
2. Push the STANDBY button, then the INSERT VIDEO button, and finally the EDIT button. Check to see that the VH lamp is blinking with interval of 0.7 to 1 second.
3. Adjust the SYNC REC CURRENT volume control on the Sub-Control panel so that the RF meter indicates maximum deflection.
4. Set the REC CURRENT switch to VIDEO. Push the INSERT VIDEO button, then the EDIT button.
5. Adjust the VIDEO REC CURRENT volume control for maximum deflection on the RF meter.
6. Return the REC CURRENT switch on the Sub-Control panel to OFF position.

B. Manual Record Test.

1. Thread a blank tape and feed a color bar signal to the VIDEO IN connector. Set the REC CURRENT switch to SYNC.
2. Set the machine in the STANDBY mode. Push the ASSEMBLE button and the EDIT button in this sequence.
3. Push only the EDIT button. See the deflection on the RF meter. (Check the picture quality on the display, if required.)
4. Push the EDIT button (the machine is set in the REC mode.). Turn the REC CURRENT volume control on the Sub-Control panel. Push the EDIT button again and check that the deflection on the RF meter is incleased. Repeat step 3 and 4, until deflection of the RF meter is maximum.
5. Set the REC CURRENT switch to VIDEO. Optimize the video record current, performing as step 2, 3 and 4.
6. Return the REC CURRENT switch on the Sub-Control panel to OFF position.

SECTION 10
TAPE RUN ALIGNMENT

Tape run alignment should be adjusted as the following flow chart.

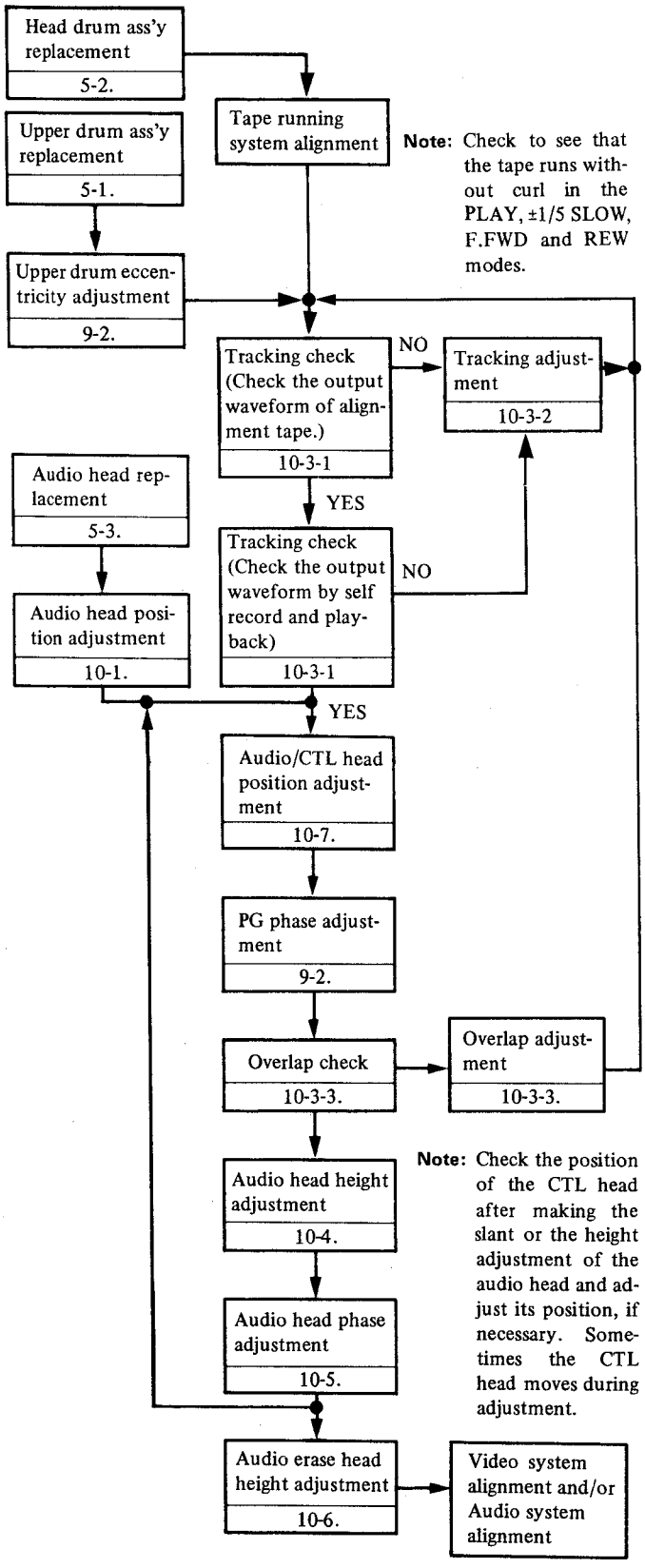

10-1. AUDIO HEAD POSITION ADJUSTMENT

a. The adjustment is necessary only after the audio head is replaced. After this adjustment perform checks and adjustments following the flowchart at the beginning of this chapter.

b. If the audio head and shield case lid are too close, tape cannot run smoothly between the audio head and the shield case lid.

c. If the audio head and shield case lid are too far apart, the audio signal to noise ratio may deteriorate.

1. Insert the replacement audio head into the shield case and install it on the head base plate with the head spacer by two screws.

2. Place the assembly on a flat plate as shown in Fig. 10-1. Insert a 0.6 mm thick spacer on the upper portion (Audio CH-1, CH-2 area), while pressing the audio head and the shield case downward, tighten the two screws.

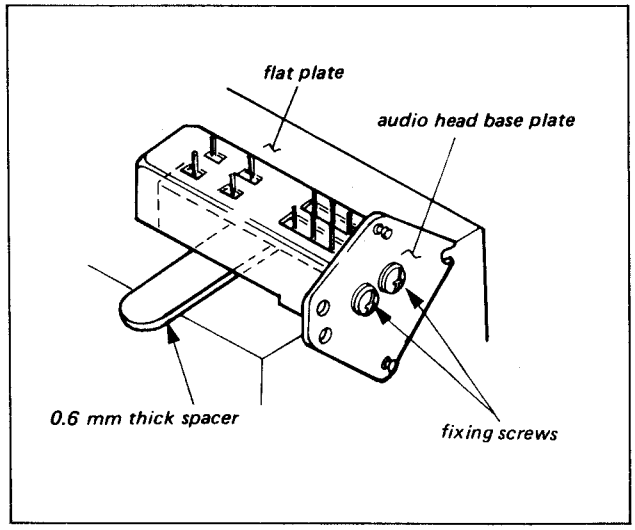

Fig. 10-1. Audio head position adjustment

3. After tightening the two screws, check to see that the clearance between the head face and the flat plate is 0.5 to 0.7 mm over all areas of the audio head.

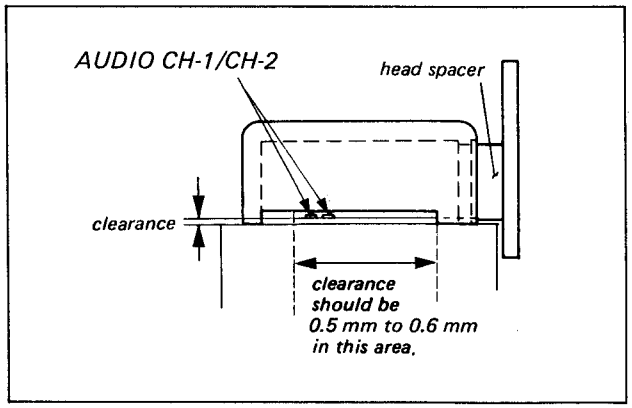

Fig. 10-2. Audio head position adjustment

10-2. END SENSOR POSITION ADJUSTMENT

Check Procedure

1. Turn power off, thread a tape. Check to see that the tape does not touch at the End Sensor unit, even if the Tension Detection Guide is moved to the arrow shown in the detail of Fig. 10-3 as far as it goes. If it is touching, perform the following adjustments.

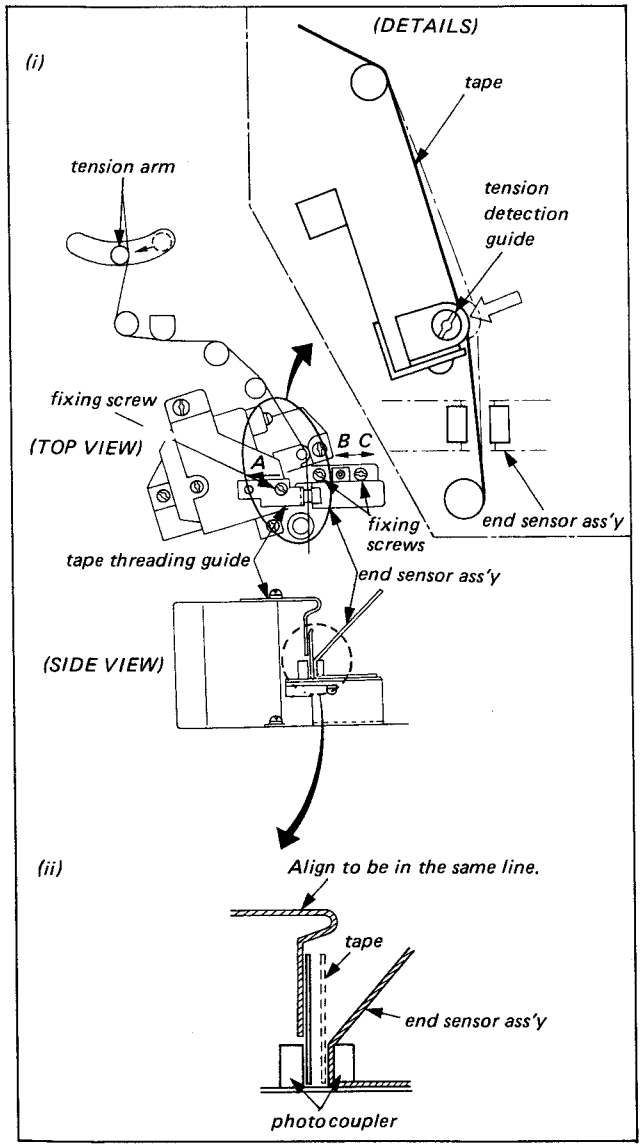

Fig. 10-3. End sensor adjustment

Adjustment Procedure

2. If the tape touches with the Tape Threading Guide, loosen the screw securing the guide, and move the guide to the arrow of "A" as far as it goes.

3. On the other hand, if the tape touches with the End Sensor Assembly, loosen the screws securing the assembly, then adjust its position (toward B or C) so that the tape is centered between photocoupler.

10-3. TRACKING ADJUSTMENT

Since this adjustment has a pronounced effect upon the interchangeability of tape, perform this adjustment when the components on the tape path is replaced, or when a tape curls along the tape guide and will be damaged, or when a recorded tape by other machine cannot be played back correctly.

10-3-1. Tracking Check

The Step 2 in the following check procedure is required only when Head Drum Assembly or Upper Drum Assembly is replaced.

1. Thread a tape, place machine in the following modes in sequence; PLAY, F.FWD and REV modes. Check to see that no tape curls along the tape guide flanges.

2. Record a video signal about 20 minutes.

   Note: The purpose of this recording is to have good head-to-tape contact. Therefore this procedure is necessary when Head Drum Assembly or Upper Drum Assembly is replaced.

3. Set the switch (SW-3) on the SYNC PULSE Board to REF FRAME, and connect scope as follows.
   CH-1 : TP-5 on the RF SW Board
   TRIG : FRAME PULSE Connector on the Connector Panel

4. Play back the "WHITE" segment of alignment tape. Turn the tracking volume control clockwise, and then turn count-clockwise. Check to see that the amplitude of RF waveform is changed, however the envelope is always flat.

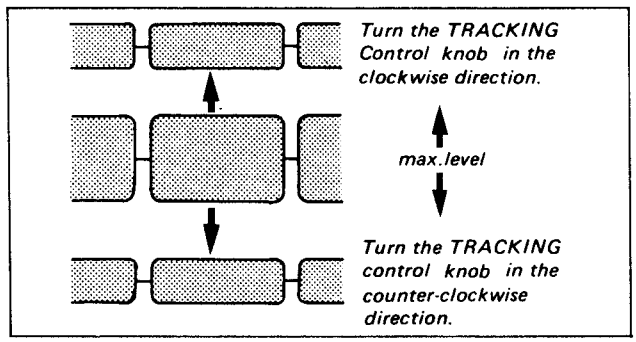

Fig. 10-4. TRACKING CHECK (Alignment tape (BR5-2) playback mode)

5. Adjust the tracking volume so that the amplitude of RF waveform is maximum. Check to see that the fluctuation of RF waveform satisfies the specification shown in Fig. 10-5.

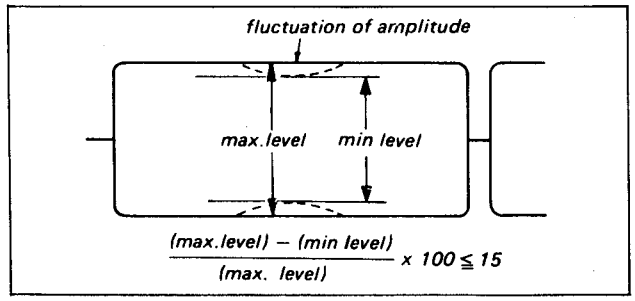

Fig. 10-5. TRACKING CHECK (fluctuation of amplitude) (Alignment tape (BR5-2) playback mode)

6. Thread a tape. Record a video signal and then play back the recorded portion. Check to see that the RF waveform satisfies the specification shown in Fig. 10-6.

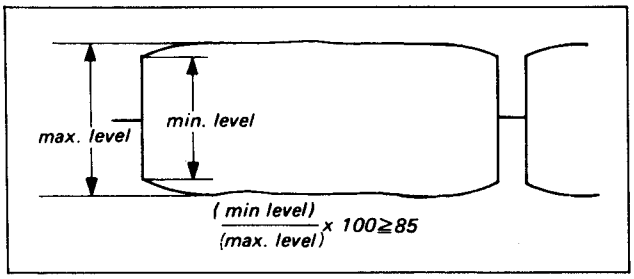

Fig. 10-6. TRACKING CHECK (tape-to-head contact) (Record and playback mode)

7. If not, proceed to following adjustment.

10-3-2. Tracking Adjustment

PRECAUTION

a. The inclination of the Slant Guide Assembly should not be adjusted ordinarily.

b. Before adjustment, mark the position of the screws shown in Fig. 10-7 with a felt pen so that they can return to their original position.

c. The height and slant adjustment screws should not be turned more than one turn.

d. The adjustment must be started from the "S" side slant guide (on the tape entrance side).

e. Finely to adjust the Fixed Guide (1), and Tapered Guide shown in Fig 10-8 is recommended during tracking adjustment, however the other guides should not be adjusted.

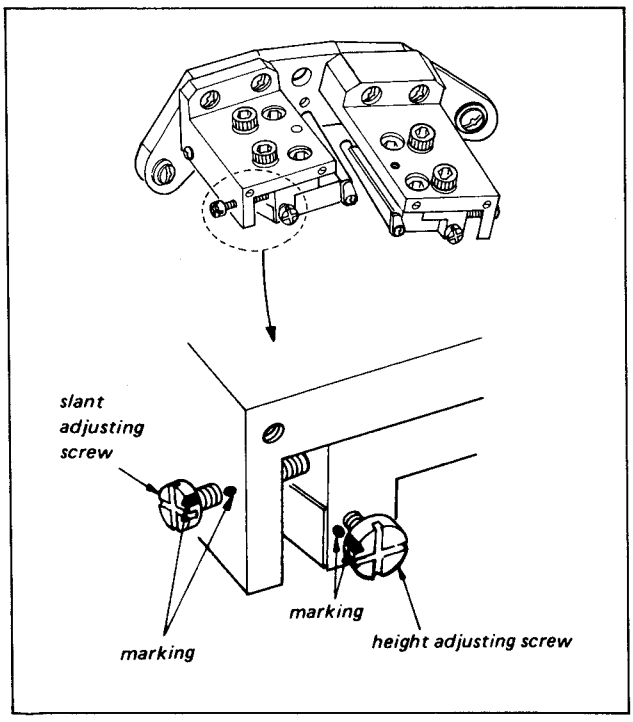

Fig. 10-7. TRACKING adjustment

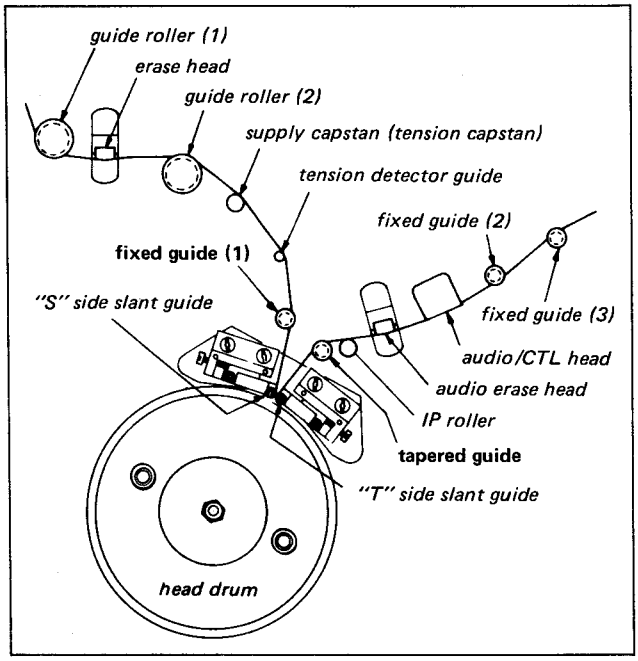

Fig. 10-8. Location of tape guide

"S" Side Slant Guide Adjustment

1. Set the switch on the printed circuit and connect scope as follows.
   - SW-3/SYNC PULSE Board: REF FRAME
   - oscilloscope
     CH-1 : TP-5/RF SW Board
     TRIG : FRAME PULSE out (connector panel)
2. Play back the "WHITE" segment of alignment tape BR5-2.
3. Turn the tracking volume control on the Sub-Control Panel clockwise or counterclockwise so that the amplitude of RF waveform is about 2/3 its maximum level.
4. Loosen the two "SL" screws shown in Fig. 10-9, 1/2 turn.

   Note: Do not loosen the screws too much.

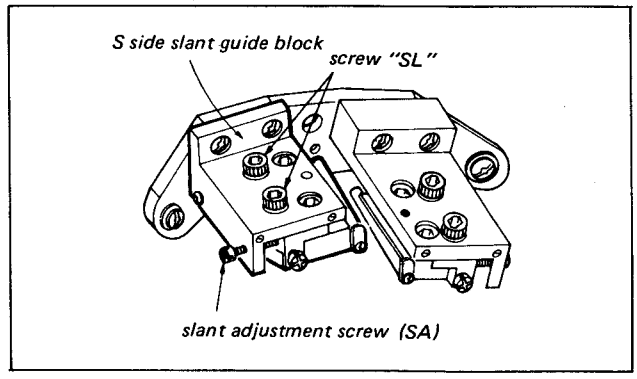

Fig. 10-9. Slant adjustment ("S" side guide block)

5. Turn the slant adjustment screw "SA" on the "S" side slant guide block counterclockwise so that the lower tension of the tape is a little stronger than the upper tension and the level of RF waveform at the tape entrance side lifts a little.

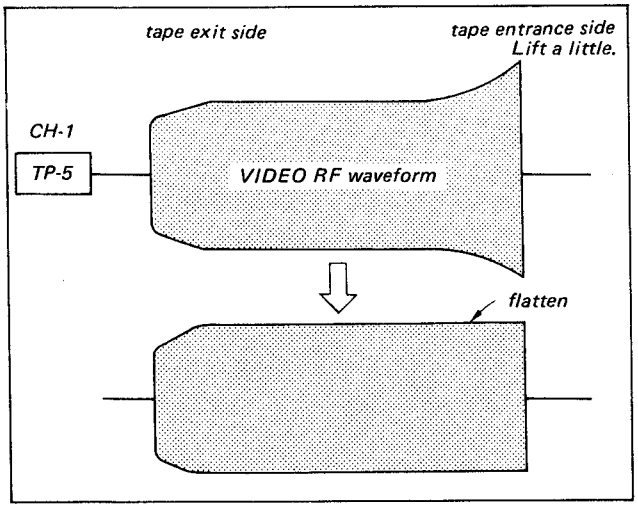

Fig. 10-10. Adjustment of "S" side guide block

6. Loosen the two "HL" screws shown in Fig. 10-11, 1/2 turn.

Note: Do not loosen the screws too much.

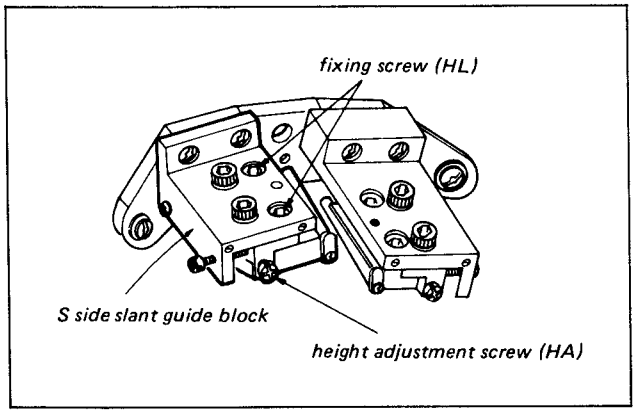

Fig. 10-11. Height adjustment ("S" side guide block)

7. Adjust the height adjustment screw "HA" so that the lifted part of the RF waveform lowers and becomes flat as possible, as shown in Fig. 10-10.
8. Check to see that there is no tape curl along the ceramic flange of the slant guide.
9. If the tape curls, turn the height adjustment screw "HA" clockwise a little.
10. Check to see that the video RF waveform is flatten.
11. If the RF waveform is not flatten, turn the slant adjustment screw clockwise so that the waveform is as flat as possible. Repeat steps 8 to 11 so that there is no tape curl along the ceramic flange and the RF waveform is flatten.
12. Tighten the two "SL" screws and then tighten the two "HL" screws. Check to see that the RF waveform is flatten. If the waveform is not flatten, repeat Steps 4 to 12.

"T" Side Slant Guide Adjustment

13. Loosen the two "SL" screws 1/2 turn. (Fig. 10-12)

Note: Do not loosen too much.

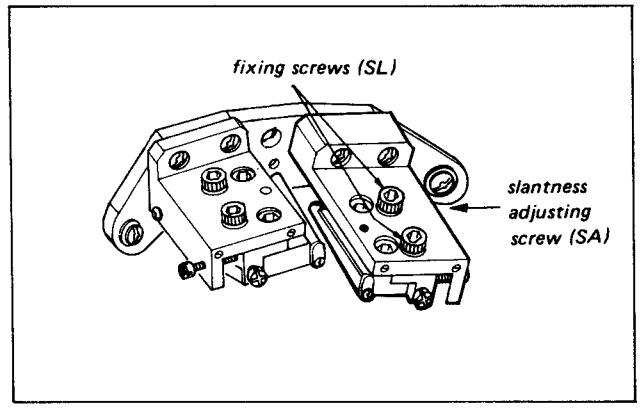

Fig. 10-12. Slant adjustment ("T" side guide block)

14. Turn the slant adjustment screw "SA" clockwise so that the lower tension of the tape is a little stronger than the upper tension and the level of RF waveform at the tape exit side lifts a little.

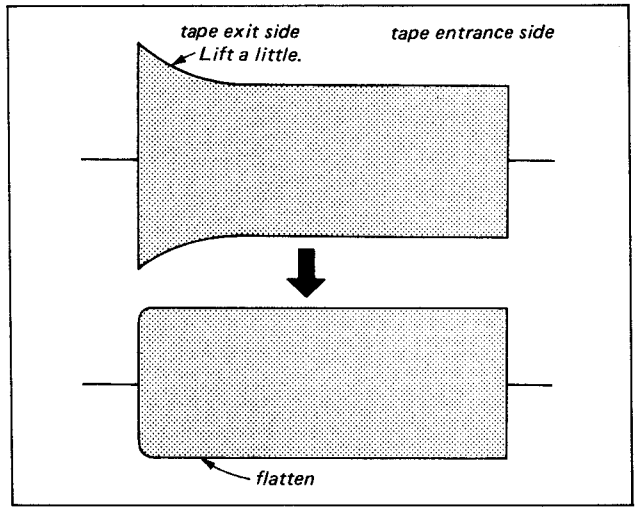

Fig. 10-13. Adjustment of "T" side guide block

15. Loosen the two "HL" screws 1/2 turn. (Fig. 10-14)

Note: Do not loosen too much.

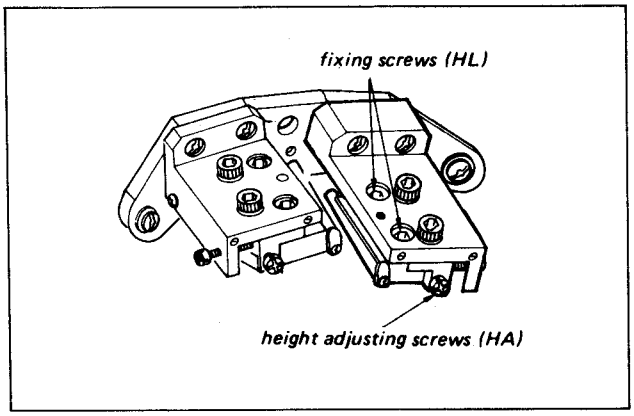

Fig. 10-14. Height adjustment ("T" side guide block)

16. Turn the height adjustment screw "HA" so that the lifted part of RF waveform at the tape exit side lowers and the RF waveform is flatten.
17. Check to see that there is no tape curl along the ceramic guide flange.
18. If the tape curls, turn the height adjustment screw "HA" clockwise a little.
19. Check to see that the RF waveform is flatten.
20. If the RF waveform is not flatten, turn the slant adjustment screws counterclockwise so that the RF waveform is as flat as possible. Repeat Step 17 to 20 until there is no tape curl along the ceramic flange and the RF waveform is flatten.
21. After adjustment, tighten the two screws "SL" and then tighten the two screws "HL". Check to see that the RF waveform is flatten. If not, repeat steps 13 to 21.
22. Reset the SW-3 on the SYNC PULSE Board and erase the mark on the Slant Guide Block.

10-3-3. Overlap Adjustment

PRECAUTION

a. Before this adjustment, Audio/CTL head position and PG phase must be adjusted.

b. If the "T" Side Slant Guide block or the Slant Guide Assembly has been moved, the Audio/CTL head position should be checked again, the PG phase adjustment should be also performed. Then adjust overlap again.

c. If the overlap "B" and "C" are adjusted, it is not necessary to adjust the overlap "D" and the dropout "A".

Check Procedure

1. Connect scope as follows.

   CH-1: TP-1/RF SW Board
   CH-2: VIDEO OUT/connecter panel

2. Thread a tape and record a color bar signal or other video signal.
3. Play back the recorded segment and confirm that the overlap satisfies the adjustment value shown in Fig. 10-15.

BVH-1100(NTSC)/-1100PM model

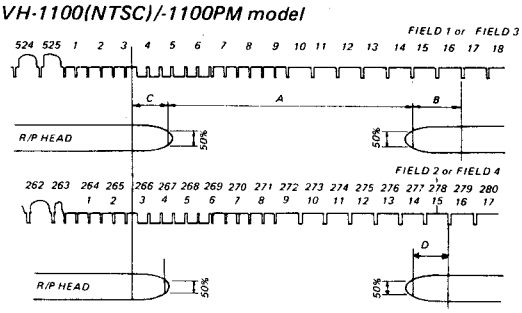

Adjustment value

$590\mu sec \leqq A \leqq 635\mu sec$
$115\mu sec \leqq B \leqq 150\mu sec$
$70\mu sec \leqq C \leqq 100\mu sec$
$85\mu sec \leqq D \leqq 120\mu sec$

BVH-1100 PS model

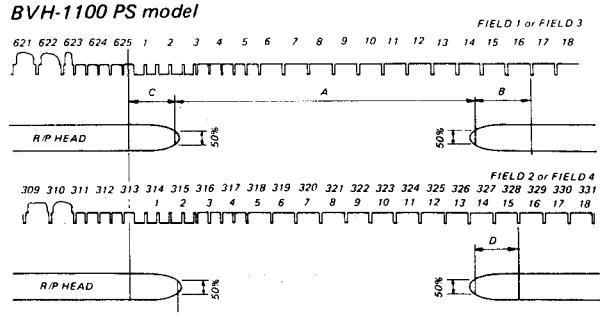

Adjustment value

$723\mu sec \leqq A \leqq 768\mu sec$
$135\mu sec \leqq B \leqq 170\mu sec$
$120\mu sec \leqq C \leqq 150\mu sec$
$105\mu sec \leqq D \leqq 140\mu sec$

Note : *Overlap value should be measured as an interval from switching point to the RF envelope 50% fall down point in the center of RF out.*

Fig. 10-15. Overlap adjustment value

4. If overlap does not satisfy the adjustment value, loosen the two screws securing the Slant Guide and move the Slant Guide assembly along the perimeter of the drum, while holding the assembly against the drum. See Fig. 10-16. Then check overlap again. If it is not satisfied, perform the adjustment procedures.

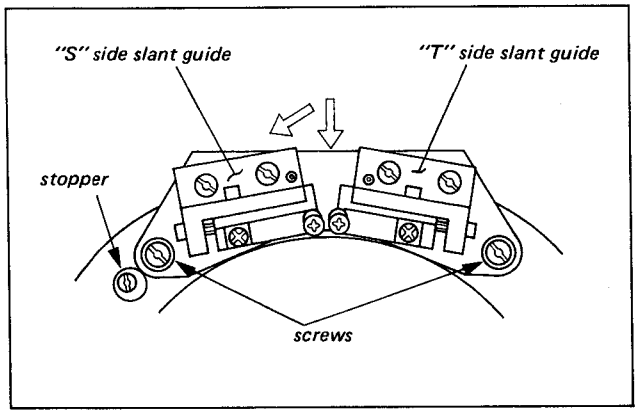

Fig. 10-16. Overlap check

Adjustment Procedure

5. If overlap "C" is shorter than the adjustment value, perform the following adjustments.
   a. Loosen the one screw "M" of the two screws securing the "S" Side Slant Guide 1/8 to 1/4 turn. (Fig. 10-17)
   b. Slightly turn the setscrew shown in Fig. 10-17 clockwise, and then check the overlap. Repeat the procedures until the adjustment value is satisfied.

   Note: If the setscrew turns 10 degrees clockwise, the clearance between the Guide Plate and the Upper Drum will narrow 15 μm and the overlap will increase 30 μsec.

   CAUTION: Never make the clearance between the Guide Plate and the Upper Drum less than 0.09 mm.

   c. After tightening the screws "M" and "N", check the overlap again.

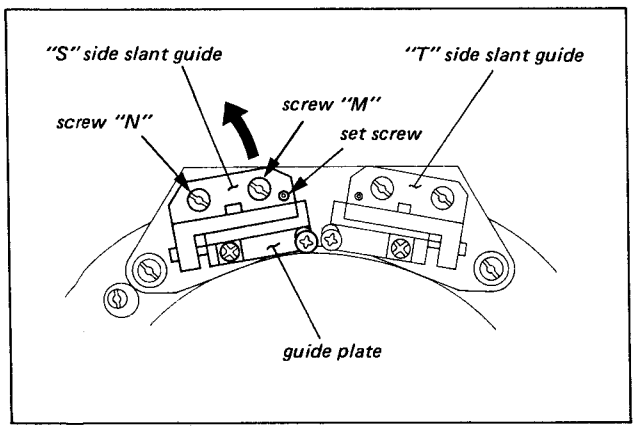

Fig. 10-17. Overlap "C" adjustment

6. If overlap "C" is longer than the adjustment value, perform the following adjustments.
   a. Loosen the one screw "M" of the two screws securing the "S" Side Slant Guide 1/8 to 1/4 turn.
   b. Turn the setscrew shown in Fig. 10-17 two or three turns counterclockwise.
   c. Rotate the "S" Side Slant Guide around the screw "Q" to the arrow shown in Fig. 10-17.
   d. Slightely turn the setscrew clockwise as Step 5-b. Then check the overlap. Repeat the procedure until the adjustment value is satisfied.

   CAUTION: Never make the clearance between the Guide Plate and the Upper Drum less than 0.09 mm.

   e. After tightening the screws "M" and "N", check the overlap again.

7. If overlap "B" and "D" are shorter than the adjustment value, perform the following adjustments.
   a. Loosen the one screw "P" of the two screws securing the "T" Side Slant Guide 1/8 to 1/4 turn.
   b. Slightly turn the setscrew shown in Fig. 10-18 clockwise and then check the overlap. Repeat the procedures until the adjustment value is satisfied.

   Note: If the setscrew turns 50 degrees clockwise the clearance between the Guide Post and the Upper Drum will narrow 75 μm and overlap will increase 30 μsec.

   CAUTION: Never make the clearance between the Guide Post and the Upper Drum less than 0.25 mm.

   c. After tightening the screws "P" and "Q", check the overlap again.

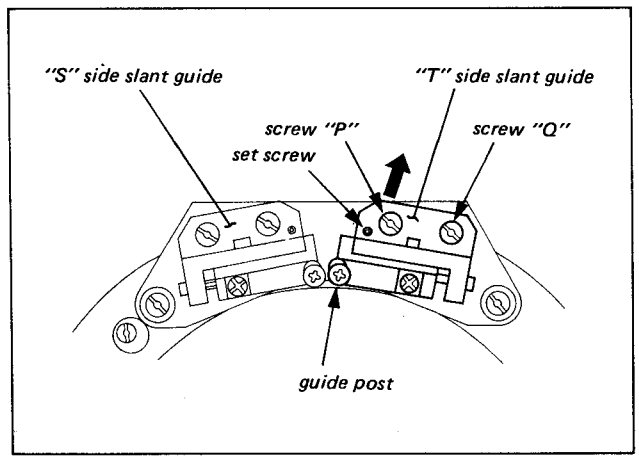

Fig. 10-18. Overlap "B" and "D" adjustment

8. If the overlap "B" and "D" are longer than the adjustment value, perform the following adjustments.
   a. Loosen the one screw "P" of the two screws securing the "T" Side Slant Guide 1/8 to 1/4 turn.
   b. Turn the setscrew shown in Fig. 10-18 two or three turns counterclockwise.
   c. Rotate the "T" Side Slant Guide to the arrow shown in Fig. 10-18 around the screw "Q".
   d. Slightly turn the setscrew clockwise as described in Step 7-b, then check the overlap. Repeat these steps until the adjustment value is satisfied.

   CAUTION: Never make the clearance between the Guide Post and the Upper Drum less than 0.25 mm.

   e. After tightening the screws "P" and "Q", check the overlap again.

10-4. AUDIO HEAD HEIGHT ADJUSTMENT

PRECAUTION

a. Audio head height must be adjusted when audio head is replaced or when the tape run alignment is performed. If this adjustment is poor, the audio signal to noise ratio may deteriorate.

b. Adjust the audio head height and the audio phase in Section 10-5, following the flowchart below.

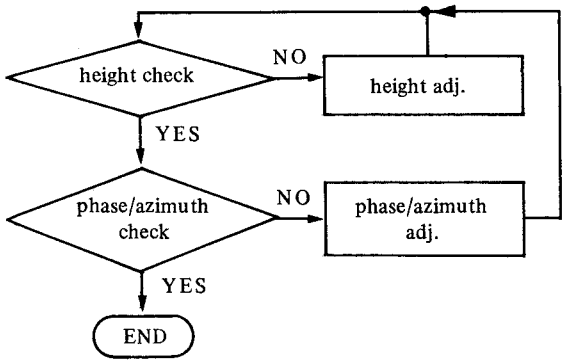

Height Check

1. Connect a VTVM to the AUDIO OUT CH-1 and CH-2 connectors of the AU connector panel.

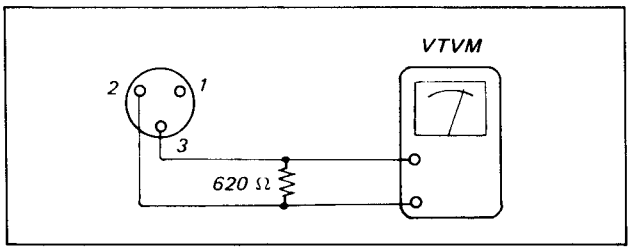

Fig. 10-19. Audio termination

2. Play back the 3 kHz audio segment of Alignment tape. Adjust the Audio PB Level control knob on the control panel for 4 dB output in both CH-1 and CH-2.

3. With the alignment tape playing back, lightly press on the top and bottom of the tape while observing the VTVM reading. Check that the VTVM reading always decrease. If the VTVM reading increase, following adjustment is required.

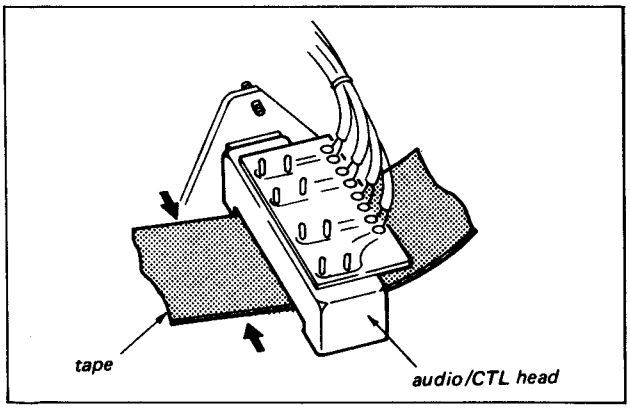

Fig. 10-20. Audio head height check

Height Adjustment

4. Loosen locking screw "L" shown in Fig. 10-21.

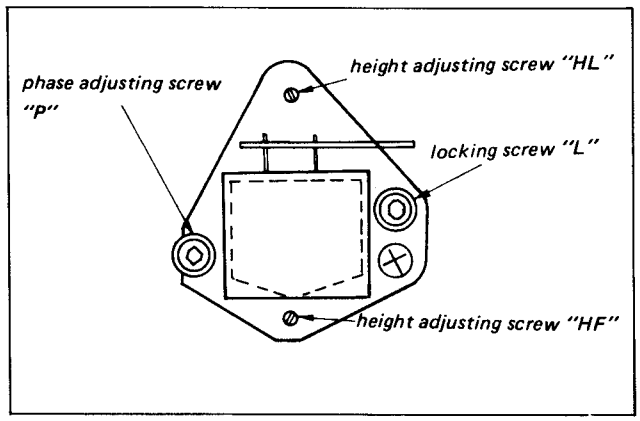

Fig. 10-21. Audio head height adjustment

5. Adjust as following procedure.
   a. If the reading increase when the top of the tape is pushed, raise the head by turning the height adjustment screws "HL" and "HF" clockwise equally.

   Note: If the turning of height adjusting screw becomes stiff, slightly loosen the locking screw "L".

   b. If the reading increases when the bottom of the tape is pushed, lower the head by turning the height adjustment screws "HL" and "HF" counterclockwise equally.

   Note: If the two adjustment screws are not turned an equal amount in the same direction, the inclination of head changes.

6. Play back the 3 kHz audio segment, and adjust the phase adjustment screw "P" so that the VTVM reading is maximum.

Inclination Adjustment

7. Remove the alignment tape. Put the flat plate (SONY Part No. J-6040-160-A) on the Audio Erase head and the Audio/CTL head, as shown in Fig. 10-22. Check that there is no clearance between the Audio/CTL head and the flat plate when the plate is put on the Audio Erase head without any clearance.

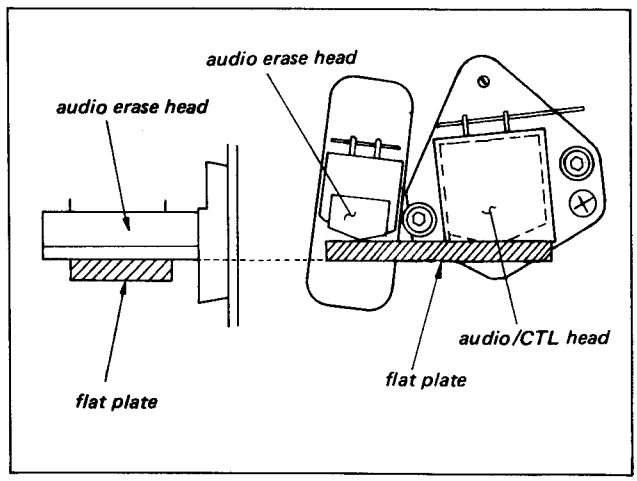

Fig. 10-22. Audio head inclination check

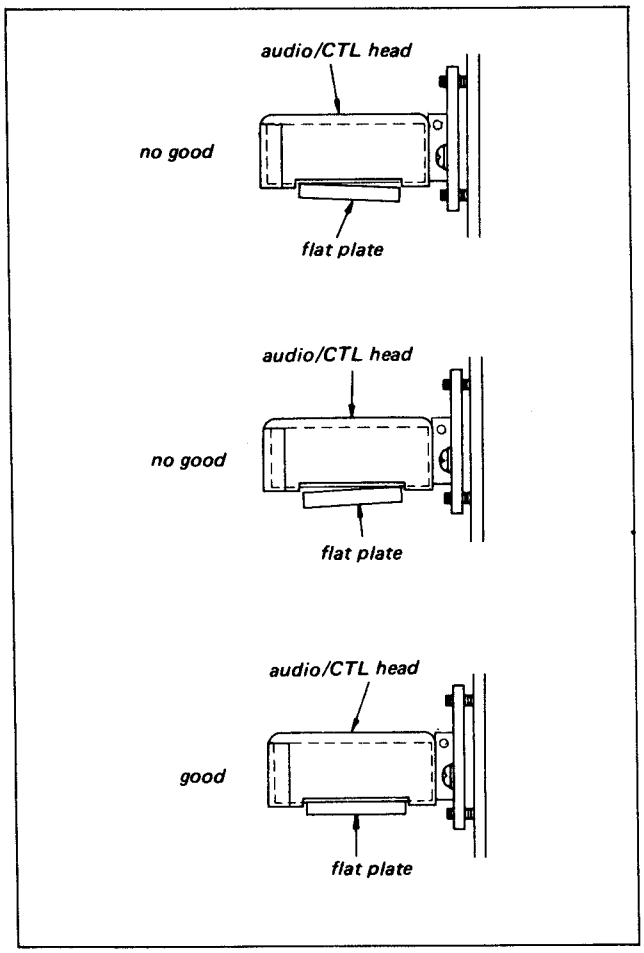

Fig. 10-23. Audio head inclination specification

8. Play back alignment tape. Tighten the locking screw "L" completely while confirming that the VTVM reading is maximum. Then adjust the phase adjustment screw "P", if required.

9. Check the audio head height by performing Step 3.

   Note: When Audio Head height is measured by developing the recorded tape, check to see that the specification shown in Fig. 10-24 is satisfied.

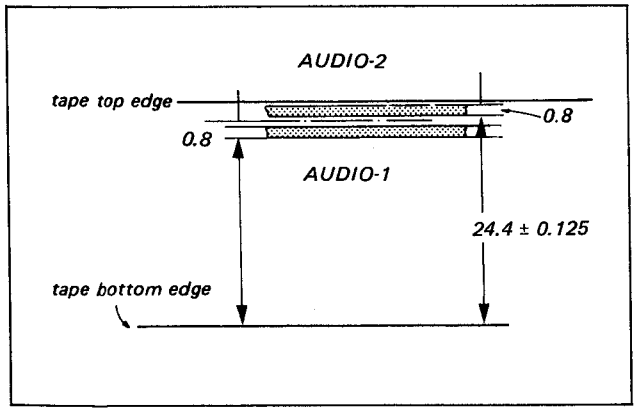

Fig. 10-24. Audio head height specification

10-5. AUDIO PHASE ADJUSTMENT

PRECAUTION

a. The audio head height adjustment should be complete before making this adjustment.

b. After completing this adjustment, check the audio head height again.

c. Since the Audio/CTL head sometimes moves during this adjustment, check the position of Audio/CTL head following Section 10-7 after making the height and phase adjustment of the audio head.

1. Connect scope's CH-1 input and EXT. HORIZONTAL input to the AU connector panel's AUDIO CH-1 and CH-2 outputs.

2. Play back the 3 kHz audio signal segment. Set up the scope controls to display the Lissajous waveform. Adjust the AUDIO PB LEVEL volume control on the Control Panel so that the output level for CH-1 and CH-2 are equal.

3. Check that the phase difference between the audio CH-1 and CH-2 is within 5 degrees as shown in Fig. 10-25. If this specification is not satisfied, proceed to Step 5.

   Note: Ideally adjust so that the phase difference is zero.

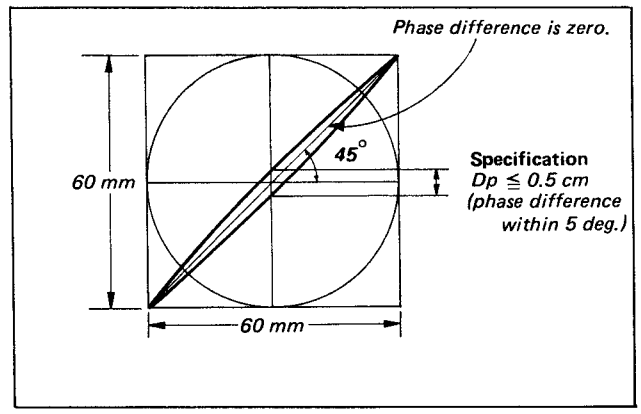

Fig. 10-25. Audio phase adjustment

4. Play back the 15 kHz audio segment. Check that the phase difference is within 30 degrees as shown in Fig. 10-26.

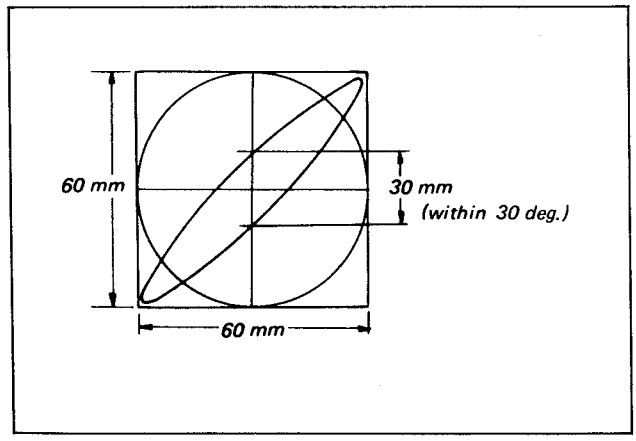

Fig. 10-26. Audio phase adjustment

5. Loosen the locking screw "L" shown in Fig. 10-27. With observing the Lissajous waveform, adjust the phase adjustment screw "P" so that the specification is satisfied. Tighten the locking screw "L" and phase adjustment screw alternately, observing the waveform. The specification must be satisfied when the two screws are tightened securely.

6. Check that the audio head height referring to Section 10-4.

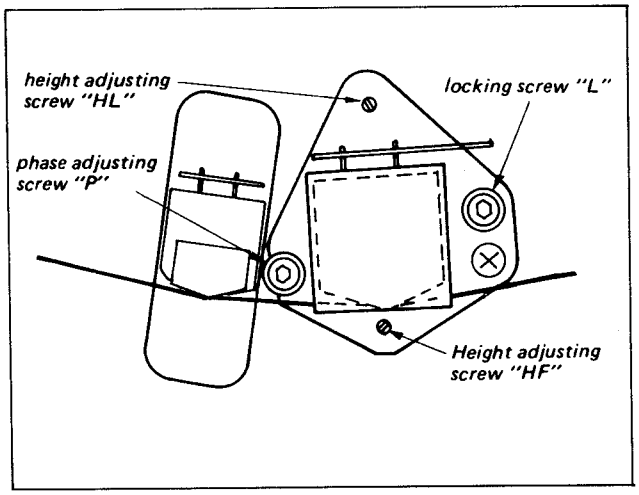

Fig. 10-27. Audio phase adjustment

10-6. AUDIO ERASE HEAD HEIGHT ADJUSTMENT

PRECAUTION

a. This adjustment is precisely set at the factory, and the adjustment is required only after the audio erase head is replaced or tracking is adjusted.

b. Never replace a part in the Audio Erase Head Assembly with a part in the taken out from an assembly for service use, since the head height is correctly adjusted at the factory.

c. The audio head height, audio phase adjustment must be complete before making this adjustment.

Check

1. Thread a blank tape and record about 3 minutes of a 1 kHz signal on the audio CH-1 and CH-2.

2. Insert the edit audio with no audio signal input on either chanel over the audio recorded in Step 1.

3. Connect headphones to the machine, play back the insert portion in Step 2. Check that the 1 kHz audio signal cannot be heard when the audio playback level controls are turned to maximum level. If the 1 kHz tone can be heard, adjust the audio erase head height as follows.

Adjustment

4. Loosen the two screws securing the Audio Erase Head, adjust the thickness of the Erase Head Spacer under the assembly as shown in Fig. 10-28.

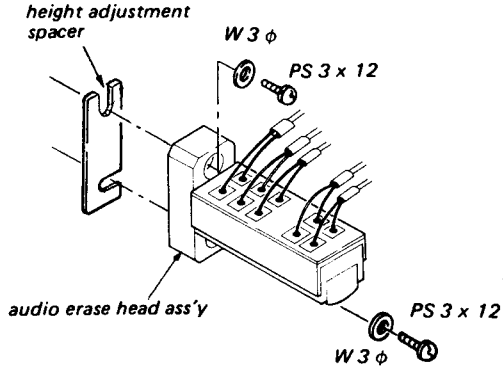

Height Adjustment Spacer:

Description and	Thickness [mm]	Part No.
erase head spacer	*0.02*	*3-651-413-01*
erase head spacer	*0.05*	*3-651-413-11*
erase head spacer	*0.1*	*3-651-413-21*
erase head spacer	*0.2*	*3-651-413-31*

Fig. 10-28. Audio erase head height adjustment

10-7. AUDIO/CTL HEAD POSITION ADJUSTMENT

PRECAUTION

a. If the CTL head has been mounted incorrectly, the tape recorded on a different machine cannot be played back correctly.

b. This adjustment is required when Upper Drum Assembly or Head Drum Assembly or Audio/CTL Head is replaced.

c. Since the PG phase deviates a great deal when the Audio/CTL head is moved, the PG phase must always be adjusted after the adjustment of the Audio/CTL head.

1. Turn power off. Put the FRAMING Board on the EXTENSION Board.

2. Turn power on. Connect scope CH-1 to the test point 12B on the EXTENSION Board and connect CH-2 to the test point 10A. Check to see that the phase difference between CH-1 and CH-2 meets the specification shown in Fig. 10-30. If it is not satisfied, proceed to the Servo alignment.

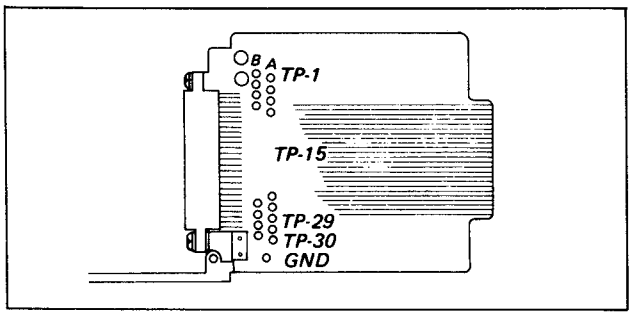

Fig. 10-29. Extension board TP

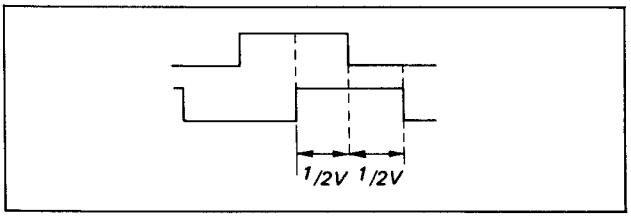

Fig. 10-30. Servo lock

3. Thread a tape. Record a video signal. Play back the recorded segment and check that the Capstan lamp on the Function panel lights. If the lamp does not light, proceed to the Servo alignment.

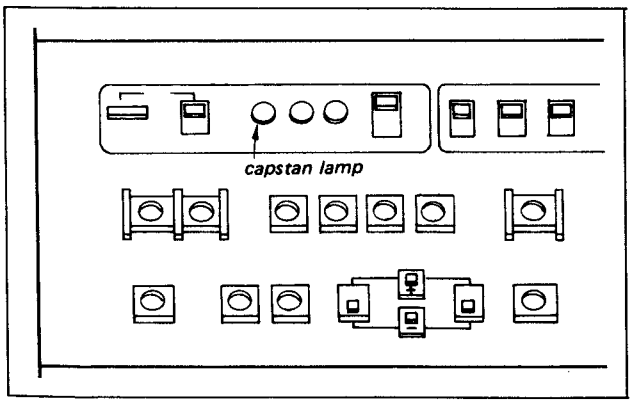

Fig. 10-31. CTL head position adjustment

4. Connect scope to the RF SW Board TP-5. Play back the "WHITE" segment of alignment tape.

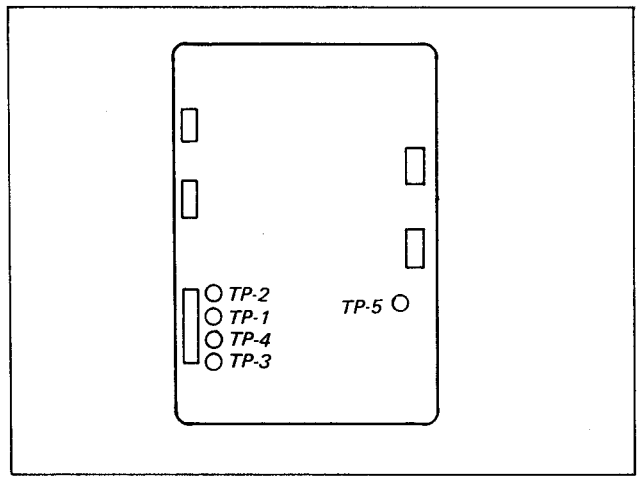

Fig. 10-32. RF SW board

5. Pull the Tracking Control on the TENSION-A board and adjust the Tracking control for maximum RF waveform. Check to see that the RF waveform does not change when the tracking control is pushed. If the RF waveform changed, adjust the Audio/CTL head position as following procedure.

6. Push the Tracking control. Loosen the three screws and insert the eccentric driver (SONY Part No. J-6040-070-A) in the adjustment hole shown in Fig. 10-33, turn the eccentric driver so that the amplitude of RF waveform is maximum.

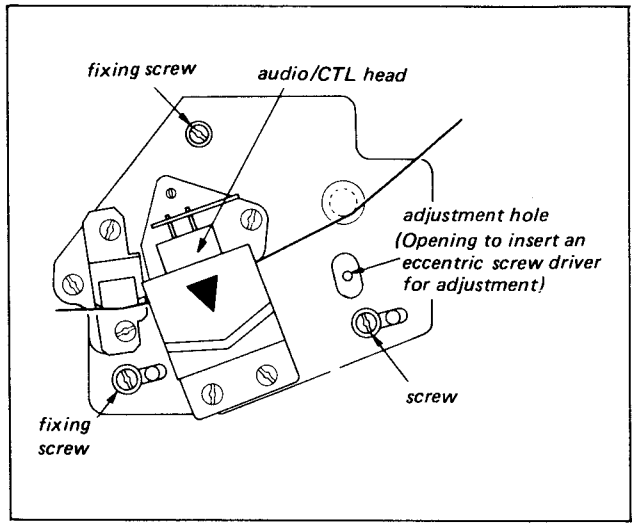

Fig. 10-33. Audio/CTL head position adjustment

7. Tighten the three screws.

SECTION 19
DT SYSTEM ALIGNMENT

19-1. PREPARATION FOR ALIGNMENT

Step 1-1.
Check to see that the machine's Servo System and Video System are correctly aligned.

Step 1-2.
Presetting of Switches

11 SYNC PULSE Board
- SW1 (INT ADVANCE Switch) : ON
- SW2 (ADVANCE Switch) : 8H (NTSC, PM) / 12H (PAL/SECAM)
- SW3 (FRAME PULSE Switch) : REF FRAME

12 DRUM SERVO Board
- SW1 (DRUM LOCK Switch) : PG

15 TENSION SERVO Board
- SKEW Control : PUSH (AUTO mode)
- PB HEAD SELECT Switch (SUB-CONTROL PANEL) : Position 3

Step 1-3.
Oscilloscope Setting
- CH-1 Probe : Connect as indicated in each step.
- CH-2 Probe : RF EQUALIZER-1 Board : TP-3 (RF OUT)
- TRIGGER : EXT from FRAME PULSE OUT Connector
- CAUTION : The following step 1-4 and step 1-5 are only for check of factory-preset position DO NOT TOUCH, IF NOT NECESSORY.

Step 1-4.
Check to see that the switches and controls presetting positions, as shown below Figure.

DT-2 BOARD

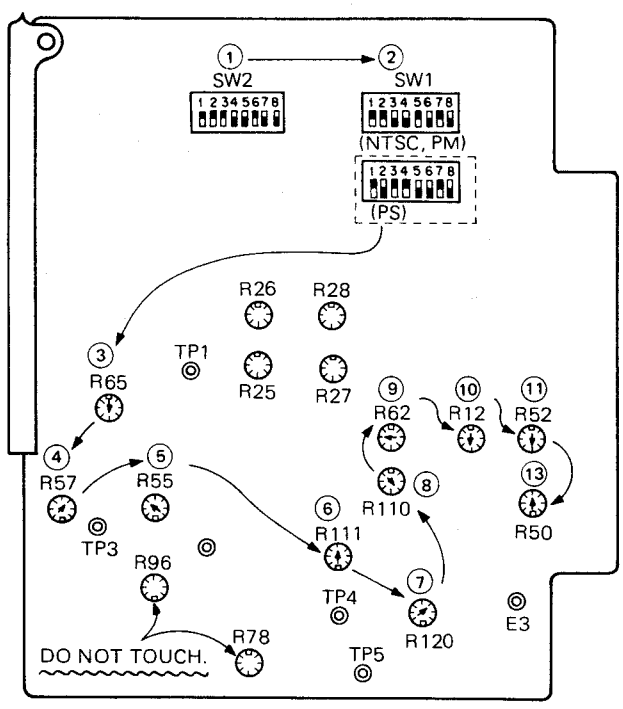

DT-1 BOARD

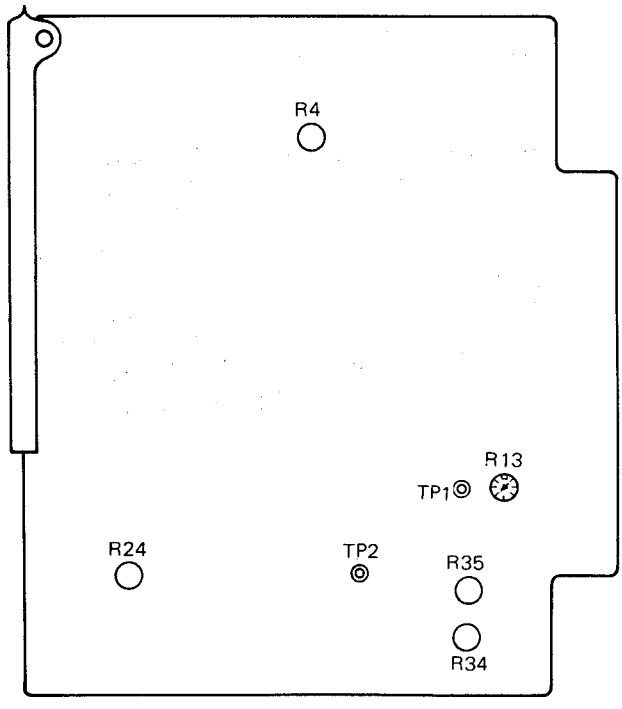

Step 1-5.
Set the machine in the RECORD mode, so that check the followings with oscilloscope.

TEST POINT DT-2 BOARD	SPECIFICATIONS	SWITCH/CONTROL
2A	0 ± 0.2V dc	SW1
TP1	0 ± 0.2V dc	SW2
IC23 PIN-1	0.7 ± 0.05V dc	⊘R27
IC23 PIN-7	2.1 ± 0.05V dc	⊘R28
IC24 PIN-1	−0.7 ± 0.05V dc	⊘R25
IC24 PIN-7	−2.1 ± 0.05V dc	⊘R26
22B	3 ± 0.7V dc	Replace the Upper Drum

19-2. DT-2 BOARD ALIGNMENT

Step 2-1.
VTR Mode : REC mode
EE/PB Switch : PB position
Oscilloscope : 5msec/DIV
DC mode

20B/DT-2

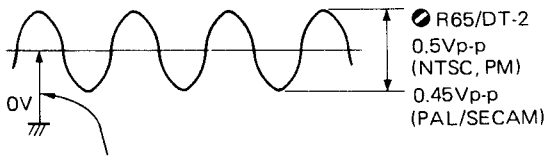

Perform Upper Drum replacement, if the center voltage varies more than ± 1V.

Step 2-2.
VTR Mode : REC mode
EE/PB Switch : PB position
Oscilloscope : AC mode

TP4/DT-2

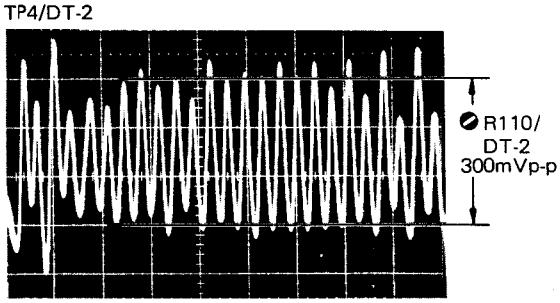

Step 2-3.
VTR Mode : REC mode
EE/PB Switch : PB position
Oscilloscope : AC mode

24B/DT-2

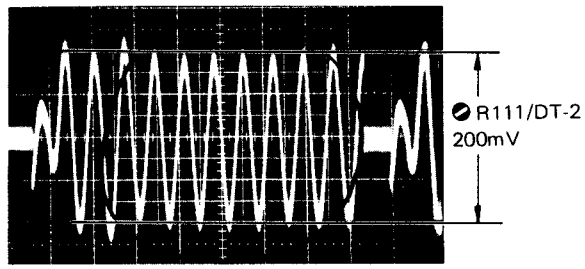

Step 2-4.
VTR Mode : REC→REW→PB→STILL
EE/PB Switch : PB position
Oscilloscope : AC mode

1. Play back the beginning of the recorded portion, then set the machine in the STILL mode.

TP3/RF EQ-1
⊘R62/DT-2

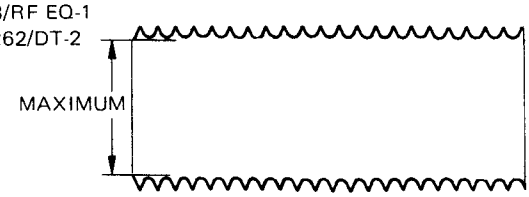

2. Confirmation
Oscilloscope : DC mode

20B/DT-2

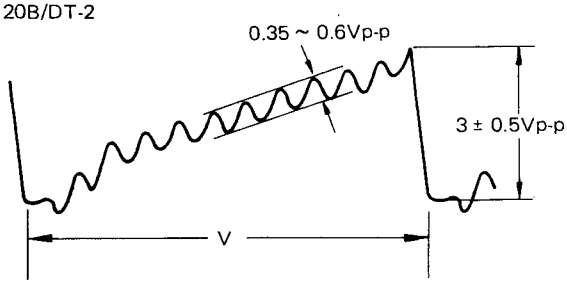

Step 2-5.
VTR Mode : REC→REW→PB→STILL
EE/PB Switch : PB position
Oscilloscope : AC mode

INCORRECT

IC34 PIN-1
DT-2

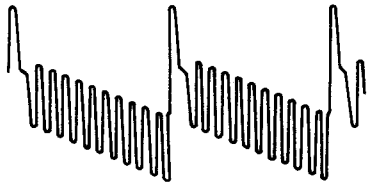

CORRECT

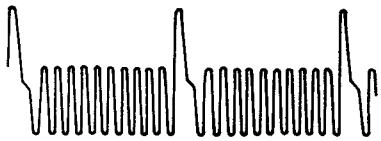

⊘R120/DT-2

Step 2-7.
VTR Mode : PROGRAM JOG + 1/5 SLOW mode
Oscilloscope : DC mode

1. Confirmation
Spec : peak-to-peak amplitude < ± 5V

TP2/DT-2

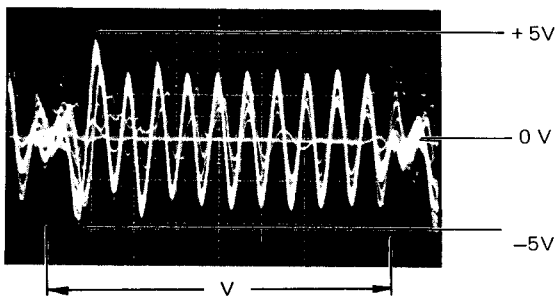

2. Adjustment

TP3/DT-2

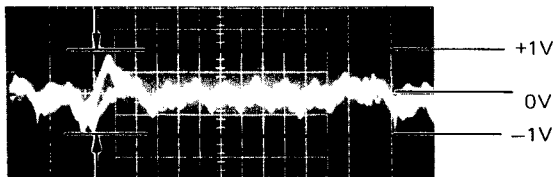

⊘R55
⊘R57 > minimum (< ± 1V)

Step 2-8.
VTR Mode : PROGRAM JOG –1/5 SLOW mode
Oscilloscope : DC mode

TP3/DT-2

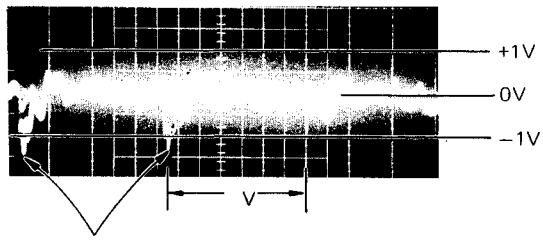

⊘R50 : minimum (< ± 1V)

Step 2-9.
VTR Mode : PROGRAM JOG X 2 (actual X 2.1) mode
Oscilloscope : DC mode

TP3/DT-2

⊘R52 : minimum (< ± 1V)

⊘R12 : minimum (< ± 1V)

19-3. DT-1 BOARD ALIGNMENT

Step 3-1.
A. When the board engraved No. 1-600-181-11 is used.

VTR Mode : PLAY mode
Oscilloscope : DC mode

⊘R24 : TP2 = –2 ± 0.2V dc
⊘R35 : IC1 PIN-10 = –5 ± 0.2V dc
⊘R34 : IC1 PIN-6 = 1 ± 0.2V dc

B. When the board engraved No. 1-600-181-12/-13/-14 is used.

VTR Mode : DT (see below table)
Oscilloscope : DC mode

ADJ	VTR MODE	TEST POINT 29AB/DT-1
⊘R50	–1 SHUTTLE	"H"
	–1/5 JOG	"L"
⊘R54	+3 SHUTTLE	"H"
	+2 JOG	"L"

Step 3-2.
VTR Mode : STOP mode
EE/PB Switch : EE position

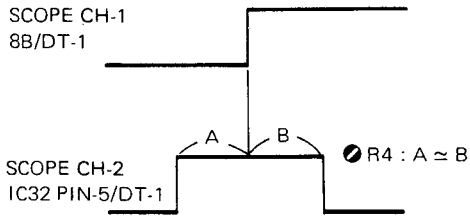

Step 3-3.
VTR Mode : SLOW mode
Oscilloscope : DC mode

TP1/DT-1

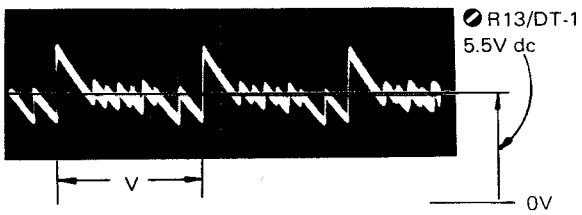

SECTION 20
BLOCK DIAGRAMS

20-1. VIDEO SYSTEM OVERALL

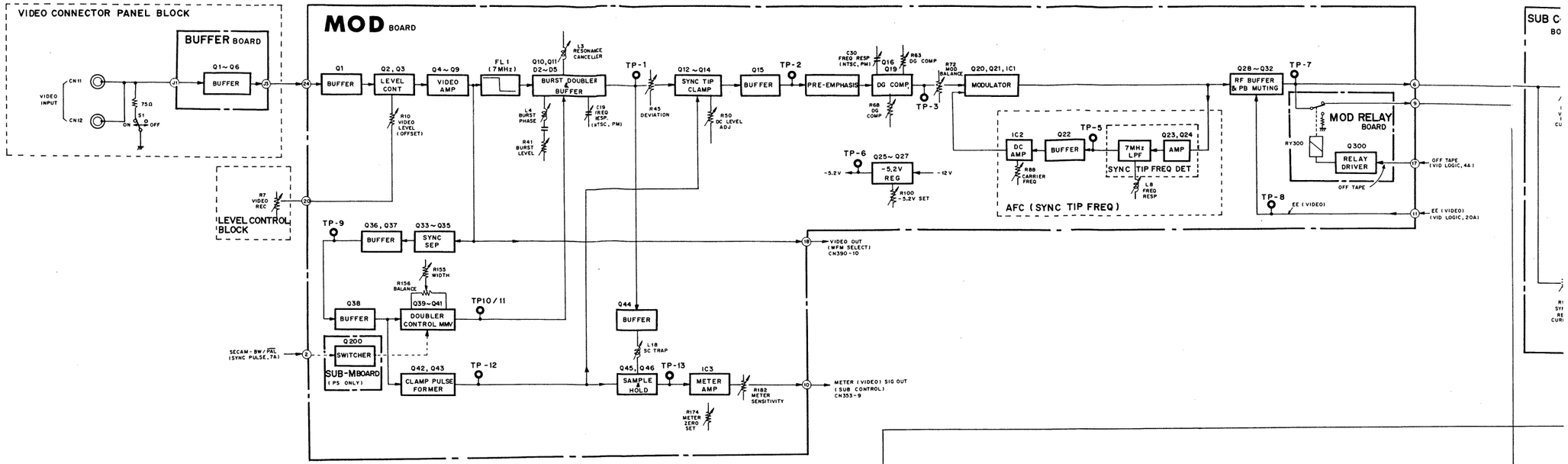

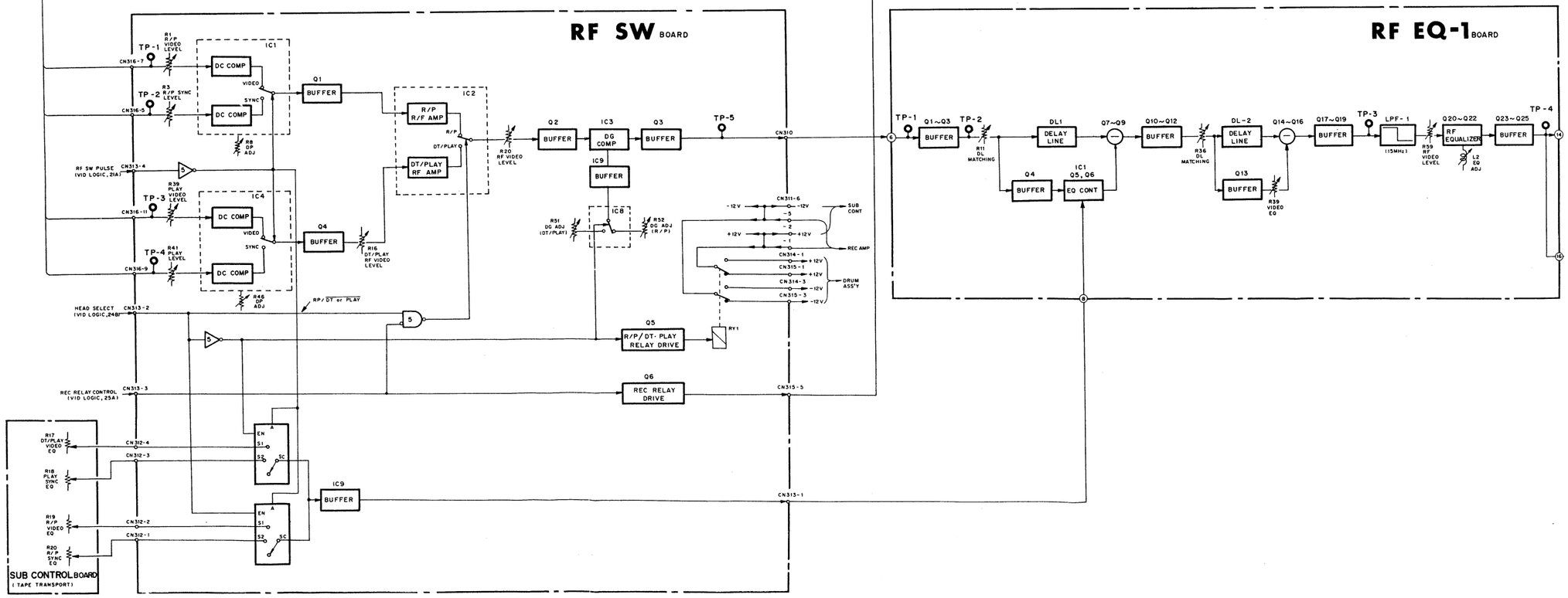

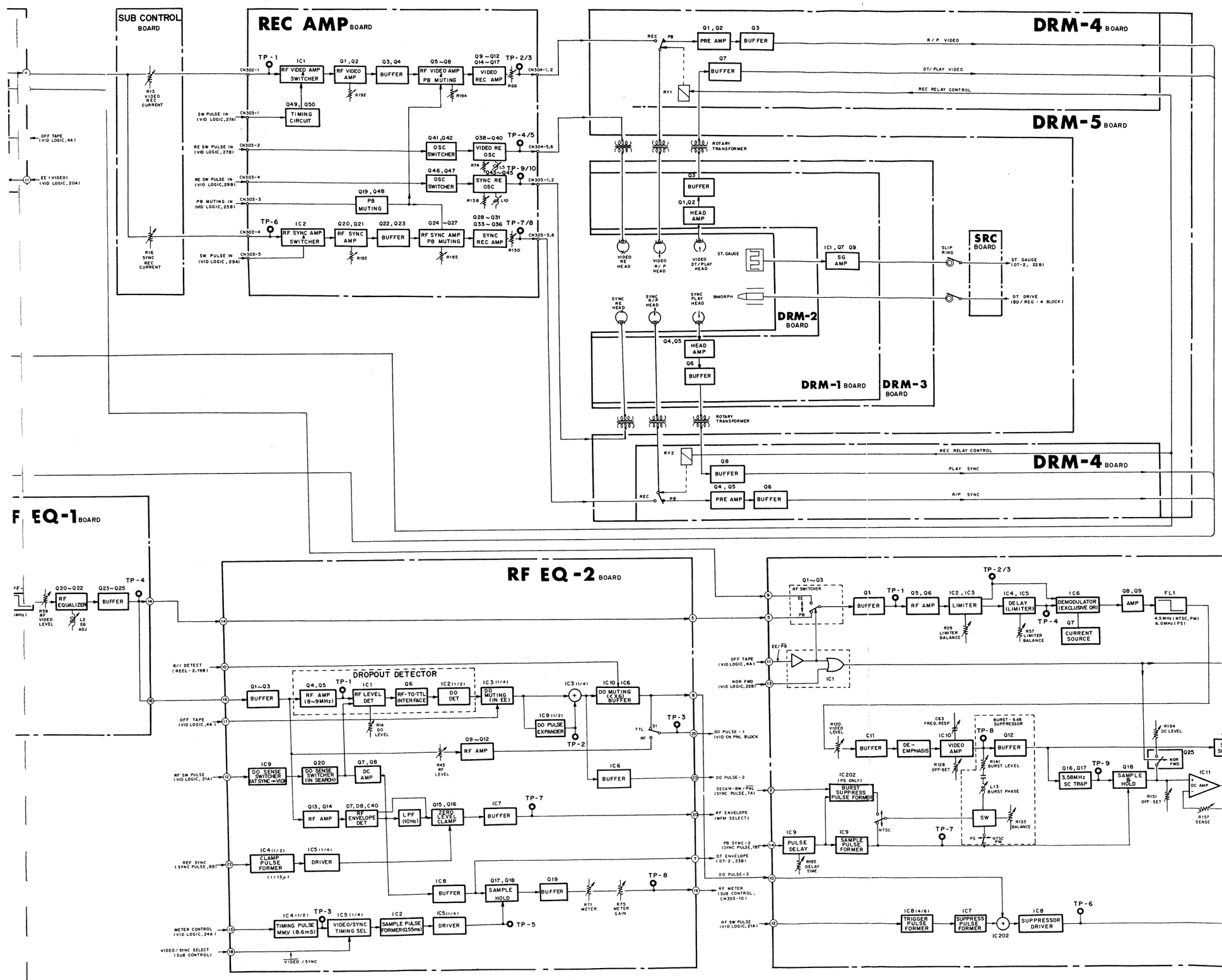
SUB CONTROL BOARD
REC AMP BOARD
R15 VIDEO REC CURRENT
R16 SYNC REC CURRENT
OFF TAPE (VID LOGIC, 4A)
EE (VIDEO) (VID LOGIC, 20A)
SW PULSE IN (VID LOGIC, 27A)
RE SW PULSE IN (VID LOGIC, 27B)
RE SW PULSE IN (VID LOGIC, 29B)
PB MUTING IN (VID LOGIC, 25B)
SW PULSE IN (VID LOGIC, 29A)
TP-1
IC1
RF VIDEO AMP & SWITCHER
Q1, Q2
RF VIDEO AMP
Q3, Q4
BUFFER
Q5~Q8
RF VIDEO AMP PB MUTING
Q9~Q12 Q14~Q17
VIDEO REC AMP
TP-2/3
R66
R192
R194
Q49, Q50
TIMING CIRCUIT
Q41, Q42
OSC SWITCHER
Q38~Q40
VIDEO RE OSC
TP-4/5
Q46, Q47
Q43~Q45
SYNC RE OSC
TP-9/10
R74
L9
L10
R158
Q19, Q48
PB MUTING
TP-6
IC2
RF SYNC AMP & SWITCHER
Q20, Q21
RF SYNC AMP
Q22, Q23
Q24~Q27
RF SYNC AMP PB MUTING
Q28~Q31 Q33~Q36
SYNC REC AMP
TP-7/8
R193
R195
R150
DRM-4 BOARD
Q1, Q2
PRE AMP
Q3
BUFFER
R/P VIDEO
Q7
DT/ PLAY VIDEO
REC RELAY CONTROL
RY1
DRM-5 BOARD
ROTARY TRANSFORMER
HEAD AMP
VIDEO RE HEAD
VIDEO R/P HEAD
VIDEO DT/PLAY HEAD
ST. GAUGE
IC1, Q7 Q9
SG AMP
SLIP RING
SRC BOARD
ST GAUGE (DT-2, 22B)
SYNC RE HEAD
SYNC R/P HEAD
SYNC PLAY HEAD
BIMORPH
DT DRIVE (BD/REG-4 BLOCK)
DRM-2 BOARD
Q4, Q5
Q6
DRM-1 BOARD
DRM-3 BOARD
RY2
Q8
REC RELAY CONTROL
PLAY SYNC
R/P SYNC
DRM-4 BOARD
REC
PB
VIDEO SYSTEM (NTSC, PS, PM)
BVH-1100A(NTSC) : # 20001-
BVH-1100APS : # 20001-
BVH-1100APM : # 20001-
F EQ-1 BOARD
Q20~Q22
RF EQUALIZER
Q23~Q25
BUFFER
TP-4
R59 RF VIDEO LEVEL
L2 EQ ADJ
RF EQ-2 BOARD
G/I DETECT (REEL-2, 19B)
OFF TAPE (VID LOGIC, 4A)
RF SW PULSE (VID LOGIC, 21A)
REF SYNC (SYNC PULSE, 8B)
METER CONTROL (VID LOGIC, 24A)
VIDEO/SYNC SELECT (SUB CONTROL)
VIDEO / SYNC
DROPOUT DETECTOR
Q4, Q5
RF AMP (8~9MHz)
IC1
RF LEVEL DET
Q6
RF-TO-TTL INTERFACE
IC2(1/2)
DO DET
IC3(1/4)
DO MUTING (IN EE)
IC9(1/2)
DO PULSE EXPANDER
IC3(1/4)
IC10, IC6
DO MUTING (X16) BUFFER
TP-1
TP-2
TP-3
R14 DO LEVEL
S1
TTL
RF
Q1~Q3
BUFFER
Q9~Q12
RF AMP
R43 RF LEVEL
IC6
BUFFER
IC9
DO SENSE SWITCHER (ATSYNC→VID)
Q20
DO SENSE SWITCHER (IN SEARCH)
Q7, Q8
DC AMP
Q13, Q14
RF AMP
D7, D8, C40
RF ENVELOPE DET
LPF (10Hz)
Q15, Q16
ZERO LEVEL CLAMP
IC7
BUFFER
TP-7
IC4(1/2)
CLAMP PULSE FORMER
(11.13μs)
IC5(1/4)
DRIVER
IC8
BUFFER
Q17, Q18
SAMPLE HOLD
Q19
BUFFER
R71 METER
R75 METER GAIN
TP-8
IC4(1/2)
TIMING PULSE MMV (8.6mS)
TP-3
IC5(1/4)
VIDEO/SYNC TIMING SEL
IC2
SAMPLE PULSE FORMER(0.55mS)
IC5(1/4)
DRIVER
TP-5
DO PULSE-1 (VID CN PNL BLOCK)
DO PULSE-2
SECAM-BW/PAL (SYNC PULSE, 7A)
RF ENVELOPE (WFM SELECT)
PB SYNC-2 (SYNC PULSE, 7B)
DT ENVELOPE (DT-2, 23B)
DO PULSE-3
RF METER (SUB CONTROL, CN353-10)
RF SW PULSE (VID LOGIC, 21A)
DEMOD BOARD
Q1~Q3
RF SWITCHER
EE
PB
Q1
BUFFER
TP-1
Q5, Q6
RF AMP
IC2, IC3
LIMITER
R29 LIMITER BALANCE
IC4, IC5
DELAY (LIMITER)
R57 LIMITER BALANCE
TP-4
IC6
DEMODULATOR (EXCLUSIVE OR)
Q7
CURRENT SOURCE
TP-2/3
Q8, Q9
AMP
FL1
4.5MHz (NTSC, PM) 6.0MHz (PS)
EE/PB
OFF TAPE (VID LOGIC, 4A)
NOR FWD (VID LOGIC, 22B)
IC1
NORMAL FWD+OFF TAPE (COLOR-1/2/3/4, 17)
R120 VIDEO LEVEL
C11
BUFFER
DE-EMPHASIS
C63 FREQ. RESP
IC10
VIDEO AMP
R128 OFF-SET
TP-8
Q12
BUFFER
BURST-6dB SUPPRESSOR
R141 BURST LEVEL
L13 BURST PHASE
R194 DC LEVEL
NOR FWD
Q25
Q13, Q14
SW NOISE SUPPRESSOR
Q15
BUFFER
TP-10
FL2
(7MHz)
Q19~Q24
VIDEO OUTPUT AMP
TP-11
VIDEO CN PNL BLOCK
CN21
VIDEO-1
CN22
VIDEO-2
CN39
TO TBC
IC202 (PS ONLY)
BURST SUPPRESS PULSE FORMER
NTSC
PS
NTSC P/C
SW
R133 BALANCE
TP-7
IC9
PULSE DELAY
R195 DELAY TIME
IC9
SAMPLE PULSE FORMER
Q16, Q17
3.58MHz SC TRAP
TP-9
Q18
SAMPLE & HOLD
IC11
DC AMP
R151 OFF-SET
R157 SENSE
IC8(4/6)
TRIGGER PULSE FORMER
IC7
SUPPRESS PULSE FORMER
IC202
IC8
SUPPRESSOR DRIVER
TP-6
VIDEO OUT-3 (WFM SELECT, CN390-8)
VIDEO OUT-5 (SYNC PULSE, 29A)

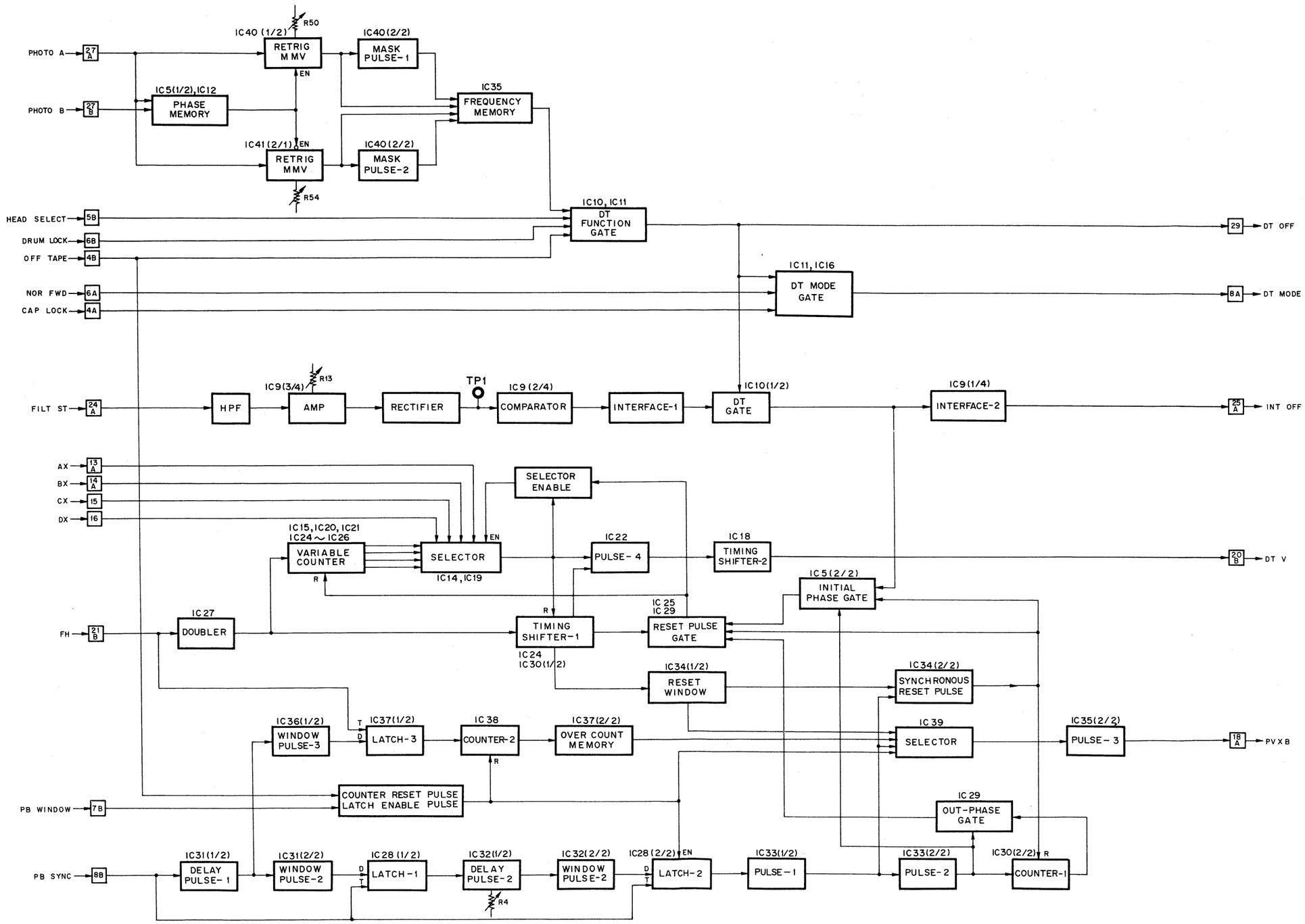
PHOTO A
27 A
PHOTO B
27 B
IC40 (1/2)
R50
RETRIG MMV
EN
IC40(2/2)
MASK PULSE-1
IC5(1/2),IC12
PHASE MEMORY
IC35
FREQUENCY MEMORY
IC41(2/1)
EN
RETRIG MMV
IC40(2/2)
MASK PULSE-2
R54
HEAD SELECT
5B
DRUM LOCK
6B
OFF TAPE
4B
IC10, IC11
DT FUNCTION GATE
29
DT OFF
NOR FWD
6A
CAP LOCK
4A
IC11, IC16
DT MODE GATE
8A
DT MODE
FILT ST
24 A
HPF
IC9(3/4)
R13
AMP
RECTIFIER
TP1
IC9(2/4)
COMPARATOR
INTERFACE-1
IC10(1/2)
DT GATE
IC9(1/4)
INTERFACE-2
25 A
INT OFF
AX
13 A
BX
14 A
CX
15
DX
16
SELECTOR ENABLE
IC15,IC20,IC21
IC24 ~ IC26
VARIABLE COUNTER
R
EN
SELECTOR
IC14,IC19
IC22
PULSE-4
IC18
TIMING SHIFTER-2
20 B
DT V
IC5(2/2)
INITIAL PHASE GATE
FH
21 B
IC27
DOUBLER
R
TIMING SHIFTER-1
IC24
IC30(1/2)
IC25
IC29
RESET PULSE GATE
IC34(1/2)
RESET WINDOW
IC34(2/2)
SYNCHRONOUS RESET PULSE
IC36(1/2)
WINDOW PULSE-3
T
D
IC37(1/2)
LATCH-3
IC38
COUNTER-2
R
IC37(2/2)
OVER COUNT MEMORY
IC39
SELECTOR
IC35(2/2)
PULSE-3
18 A
PVXB
PB WINDOW
7B
COUNTER RESET PULSE
LATCH ENABLE PULSE
IC29
OUT-PHASE GATE
PB SYNC
8B
IC31(1/2)
DELAY PULSE-1
IC31(2/2)
WINDOW PULSE-2
IC28(1/2)
LATCH-1
IC32(1/2)
DELAY PULSE-2
R4
IC32(2/2)
WINDOW PULSE-2
IC28(2/2)
EN
LATCH-2
IC33(1/2)
PULSE-1
IC33(2/2)
PULSE-2
IC30(2/2)
R
COUNTER-1

20-3. DT-2 BOARD

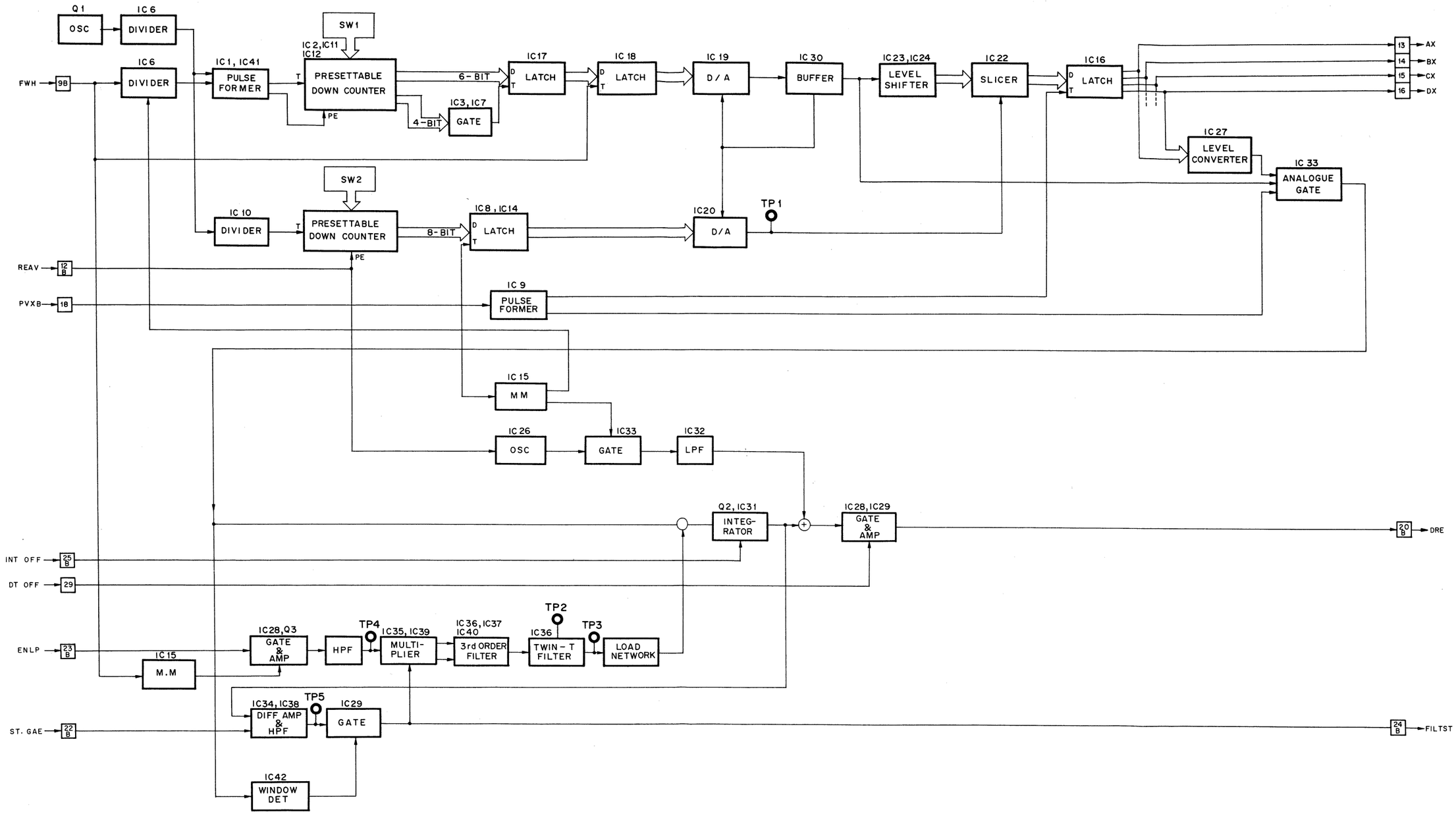

SECTION 21
SCHEMATIC DIAGRAM AND BOARD LAYOUT

SCHEMATIC DIAGRAM AND BOARD LAYOUT

AUDIO LOGIC BOARD — *COMPONENT SIDE* —

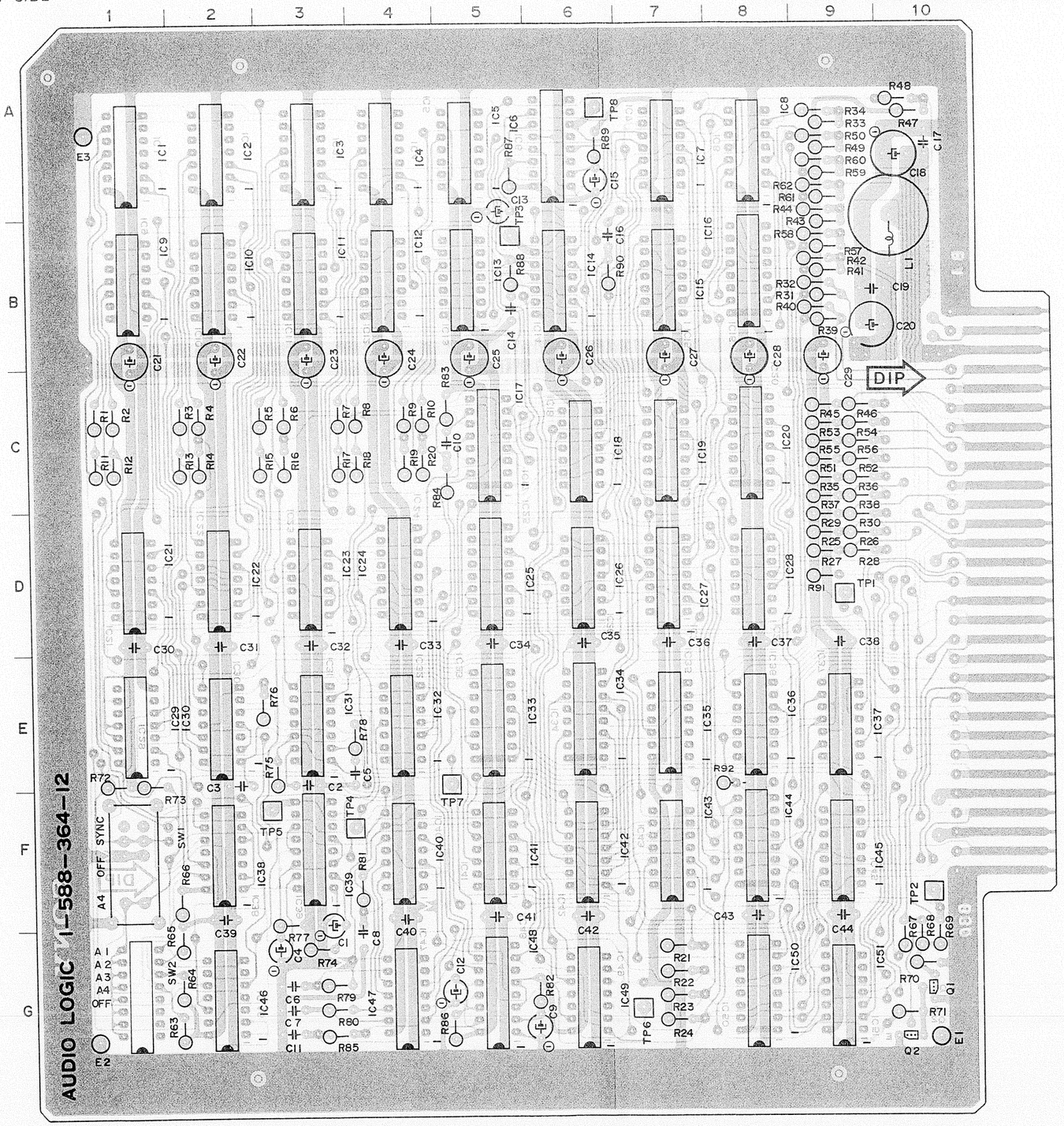

BVH-1100APS AUDIO LOGIC BOARD 1-585-364-12		BVH-1100A (NTSC) BVH-1100APM AUDIO LOGIC BOARD 1-585-364-12	
E1	G - 10	E1	G - 10
E2	G - 1	E2	G - 1
E3	A - 1	E3	A - 1
IC1	A - 1	IC1	A - 1
IC2	A - 2	IC2	A - 2
IC3	A - 3	IC3	A - 3
IC4	A - 4	IC4	A - 4
IC5	A - 5	IC5	A - 5
IC6	A - 6	IC6	A - 6
IC7	A - 7	IC7	A - 7
IC8	A - 8	IC8	A - 8
IC9	B - 1	IC10	B - 2
IC10	B - 2	IC12	B - 4
IC11	B - 3	IC13	B - 5
IC12	B - 4	IC14	B - 6
IC13	B - 5	IC15	B - 7
IC14	B - 6	IC16	B - 8
IC15	B - 7	IC17	C - 5
IC16	B - 8	IC18	C - 6
IC17	C - 5	IC19	C - 7
IC18	C - 6	IC20	C - 8
IC19	C - 7	IC22	D - 2
IC20	C - 8	IC23	D - 3
IC21	D - 1	IC24	D - 4
IC22	D - 2	IC25	D - 5
IC23	D - 3	IC26	D - 6
IC24	D - 4	IC27	D - 7
IC25	D - 5	IC28	D - 8
IC26	D - 6	IC30	E - 2
IC27	D - 7	IC31	E - 3
IC28	D - 8	IC32	E - 4
IC29	E - 1	IC33	E - 5
IC30	E - 2	IC34	E - 6
IC31	E - 3	IC35	E - 7
IC32	E - 4	IC36	E - 8
IC33	E - 5	IC37	E - 9
IC34	E - 6	IC38	F - 2
IC35	E - 7	IC39	F - 3
IC36	E - 8	IC41	F - 5
IC37	E - 9	IC42	F - 6
IC38	F - 2	IC43	F - 7
IC39	F - 3	IC44	F - 8
IC40	F - 4	IC45	F - 9
IC41	F - 5	IC46	G - 2
IC42	F - 6	IC47	G - 4
IC43	F - 7	IC48	G - 5
IC44	F - 8	IC50	G - 8
IC45	F - 9	IC51	G - 9
IC46	G - 2		
IC47	G - 4	Q1	G - 10
IC48	G - 5	Q2	G - 10
IC49	G - 6		
IC50	G - 8	TP1	D - 9
IC51	G - 9	TP2	F - 10
		TP3	B - 5
Q1	G - 10	TP4	F - 3
Q2	G - 10	TP5	F - 3
		TP6	G - 7
SW1	F - 1	TP7	F - 4
SW2	G - 1	TP8	A - 6
TP1	D - 9		
TP2	F - 10		
TP3	B - 5		
TP4	F - 3		
TP5	F - 3		
TP6	G - 7		
TP7	F - 4		
TP8	A - 6		

AUDIO LOGIC BOARD

Audio System Control

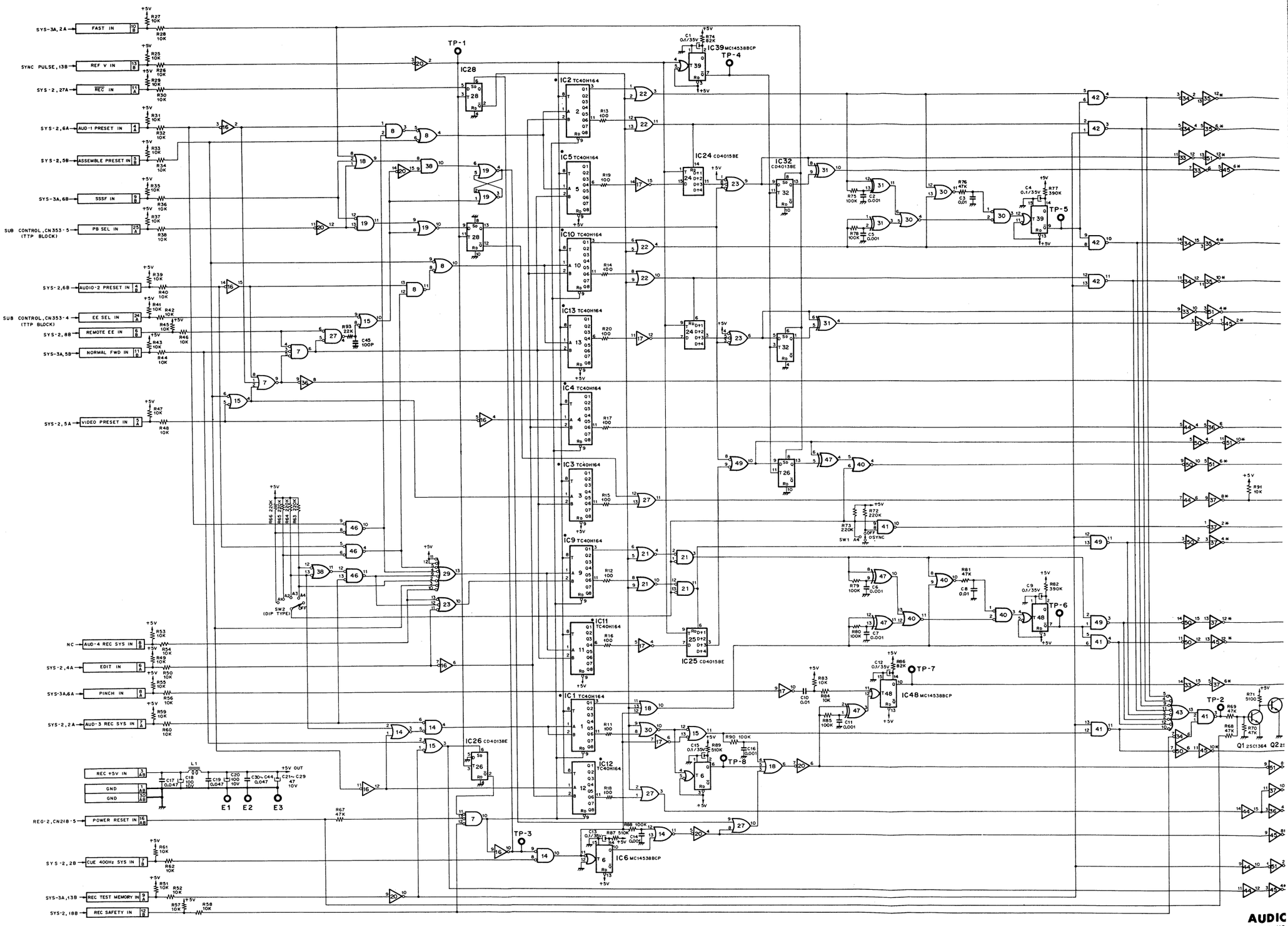

AUDIO
BOARD NO.
BVH-1100

AUDIO LOGIC

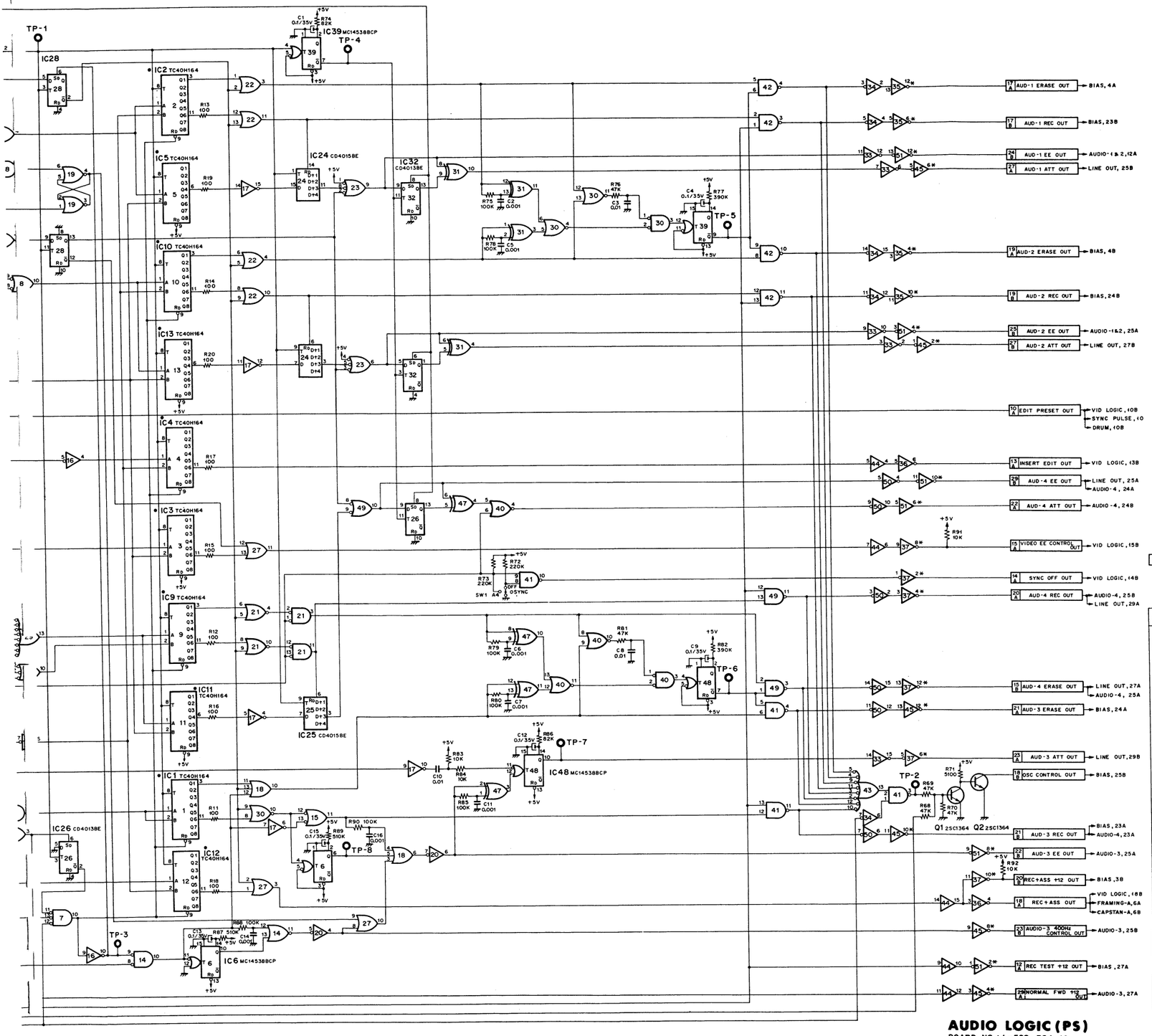

• CHANGED

	UP TO # 20399	# 20401 & UP
IC1~5, 9~13	MM74C164N	TC40H164

REF. NO.	TYPE	PIN NO. +5V	PIN NO. GND
IC1	TC40H164	14	7
2	TC40H164	14	7
3	TC40H164	14	7
4	TC40H164	14	7
5	TC40H164	14	7
6	MC14538BCP	16	8
7	CD4025BE, TC4025BP	14	7
8	CD4011BE, TC4011BP	14	7
9	TC40H164	14	7
10	TC40H164	14	7
11	TC40H164	14	7
12	TC40H164	14	7
13	TC40H164	14	7
14	CD4001BE, TC4001BP	14	7
15	CD4011BE, TC4011BP	14	7
16	CD4049BE, TC4049BP	16	8
17	CD4049BE, TC4049BP	16	8
18	CD4075BE, TC4075BP	14	7
19	CE4001BE, TC4001BP	14	7
20	CD4049BE, TC4049BP	16	8
21	CD4001BE, TC4001BP	14	7
22	CD4071BE, TC4071BP	14	7
23	CD4023BE, TC4023BP	14	7
24	CD4015BE, TC4015BP	16	8
25	CD4015BE, TC4015BP	16	8
26	CD4013BE, TC4013BP	14	7
27	CD4071BE, TC4071BP	14	7
28	CD4013BE, TC4013BP	14	7
29	CD4068BE, TC4068BP	14	7
30	CD4001BE, TC4001BP	14	7
31	CD4070BE, MC14070BCP	14	7
32	CD4013BE, TC4013BP	14	7
33	CD4049BE, TC4049BP	16	8
34	CD4049BE, TC4049BP	16	8
35	SN7406N	14	7
36	SN74LS04N	14	7
37	SN7406N	14	7
38	CD4081BE, TC4081BP	14	7
39	MC14538BCP	16	8
40	CD4001BE, TC4001BP	14	7
41	CD4011BE, TC4011BP	14	7
42	CE4011BE, TC4011BP	14	7
43	CD4068BE, TC4068BP	14	7
44	CD4050BE, TC4050BP	16	8
45	SN7406N	14	7
46	CD4071BE, TC4071BP	14	7
47	CD4070BE, MC14070BCP	14	7
48	MC14538BCP	16	8
49	CD4011BE, TC4011BP	14	7
50	CD4049BE, TC4049BP	16	8
51	SN7407N	14	7

AUDIO LOGIC (PS)
BOARD NO. : 1-588-364-12
BVH-1100APS : #20001-

AUDIO-1 & 2 BOARD – *COMPONENT SIDE* –

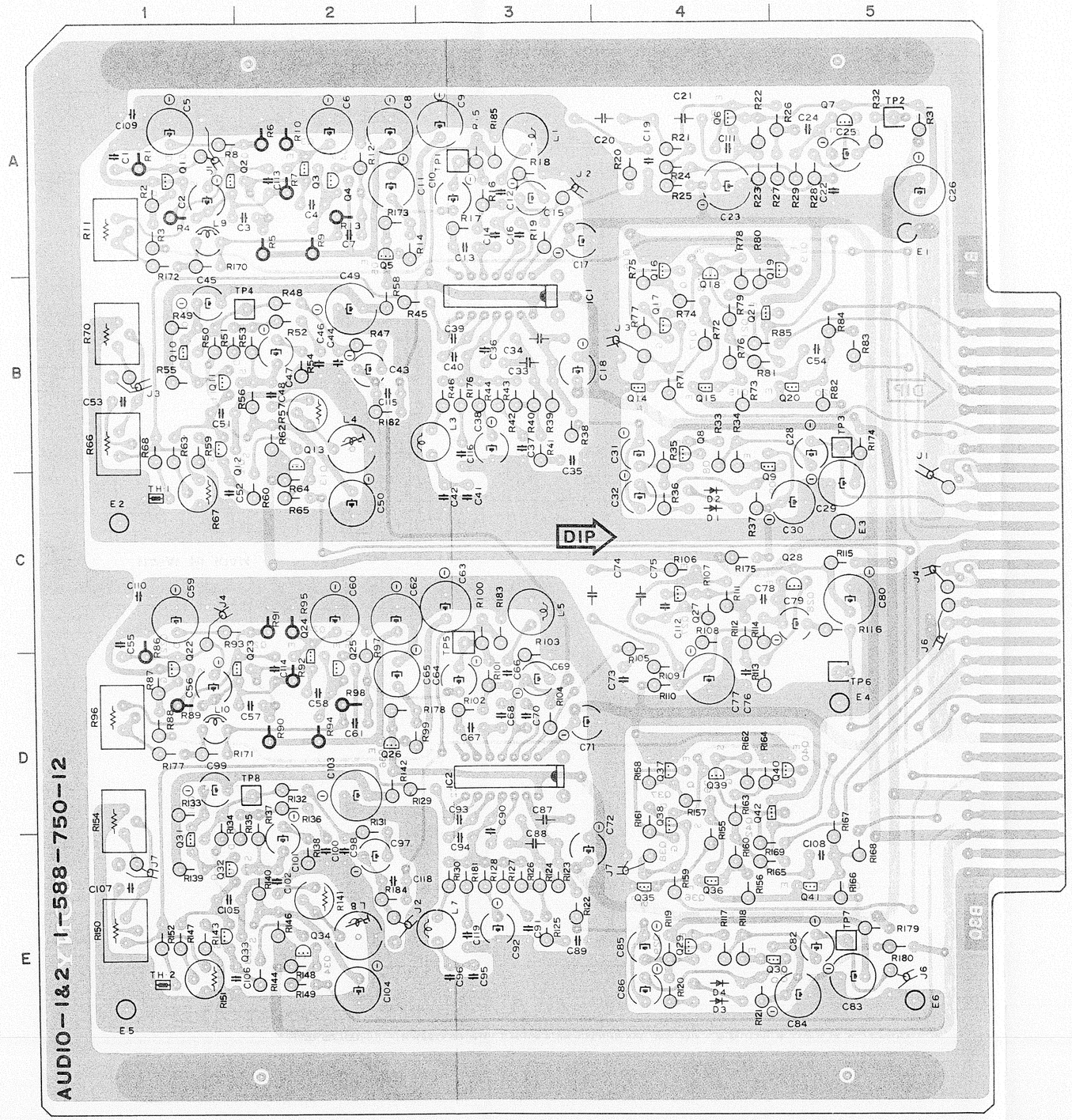

BVH-1100A (NTSC)
BVH-1100APS
BVH-1100APM
AUDIO-1 & 2 BOARD
1-588-750-12

D1 C - 4
D2 C - 4
D3 E - 4
D4 E - 4

E1 A - 5
E2 C - 1
E3 C - 5
E4 D - 5
E5 E - 1
E6 E - 5

IC1 B - 3
IC2 D - 3

L4 B - 2
L8 E - 2

Q1 A - 1
Q2 A - 1
Q3 A - 2
Q4 A - 2
Q5 A - 2
Q6 A - 4
Q7 A - 5
Q8 B - 4
Q9 B - 4
Q10 B - 1
Q11 B - 1
Q12 B - 1
Q13 B - 2
Q14 B - 4
Q15 B - 4
Q16 A - 4
Q17 B - 4
Q18 A - 4
Q19 A - 5
Q20 B - 5
Q21 B - 4
Q22 D - 1
Q23 D - 1
Q24 D - 2
Q25 D - 2
Q26 D - 2
Q27 C - 4
Q28 C - 5
Q29 E - 4
Q30 E - 4
Q31 E - 1
Q32 E - 1
Q33 E - 1
Q34 E - 2
Q35 E - 4
Q36 E - 4
Q37 D - 4
Q38 D - 4
Q39 D - 4
Q40 D - 5
Q41 D - 4
Q42 C - 5

R11 A - 1
R57 B - 2
R66 B - 1
R67 C - 1
R70 B - 1
R96 D - 1
R141 E - 5
R150 E - 1
R151 E - 1
R154 D - 1

TP1 A - 3
TP2 A - 5
TP3 B - 5
TP4 B - 2
TP5 C - 3
TP6 D - 5
TP7 E - 5
TP8 D - 2

AUDIO-1 & 2 BOARD

Audio REC/PB Amplifier

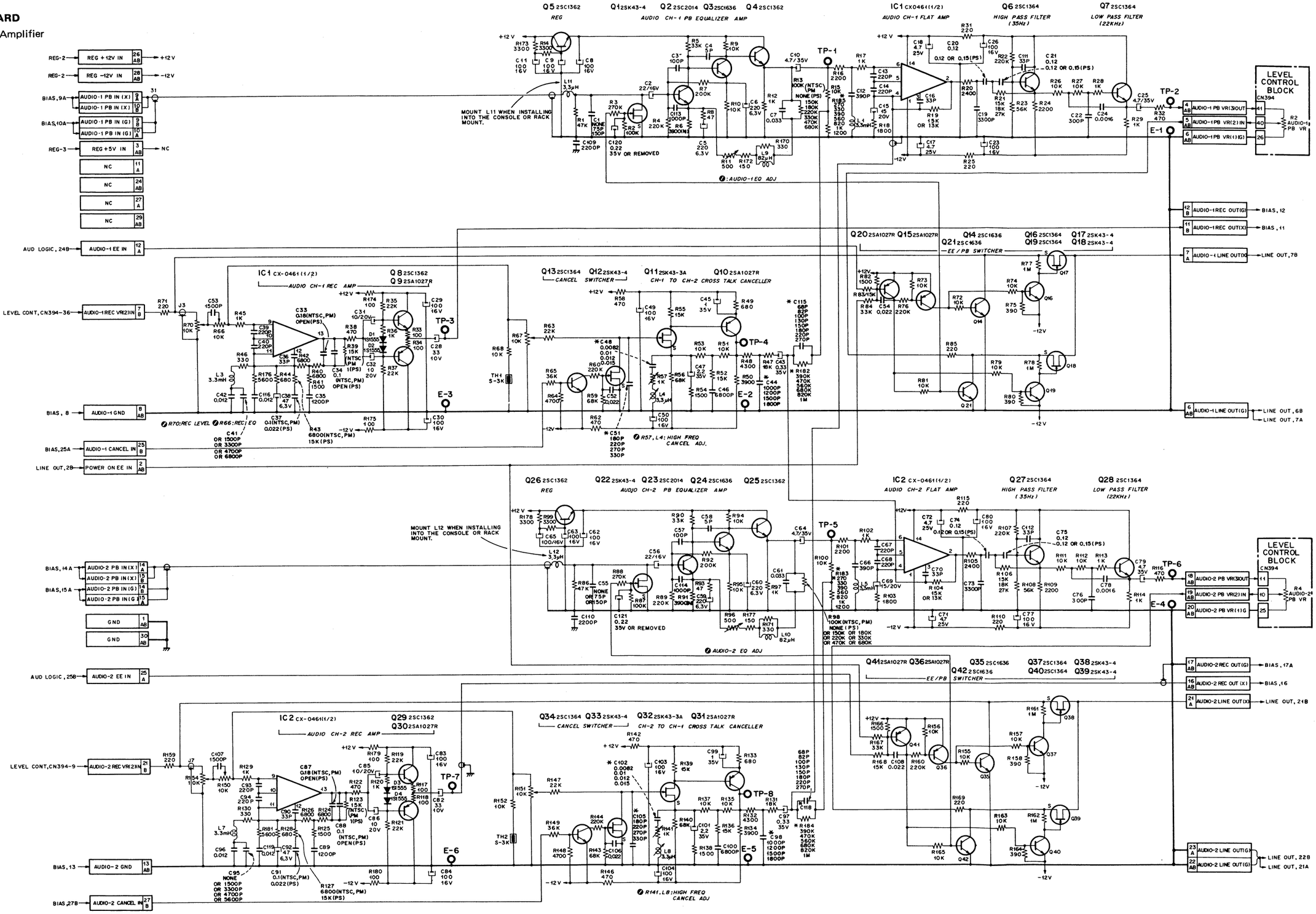

AUDIO

BOARD NO

BVH-1100

BVH-1100

BVH-1100

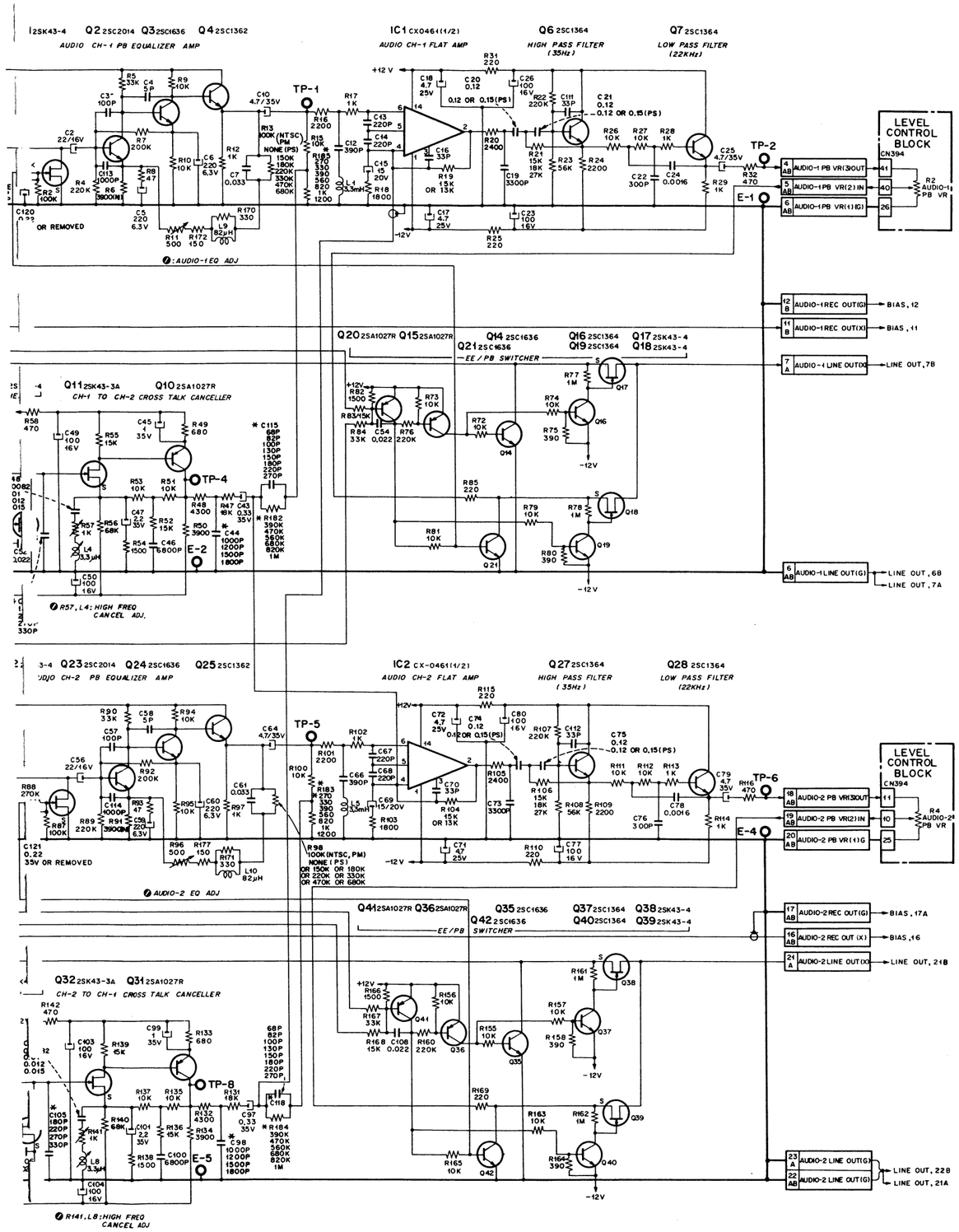

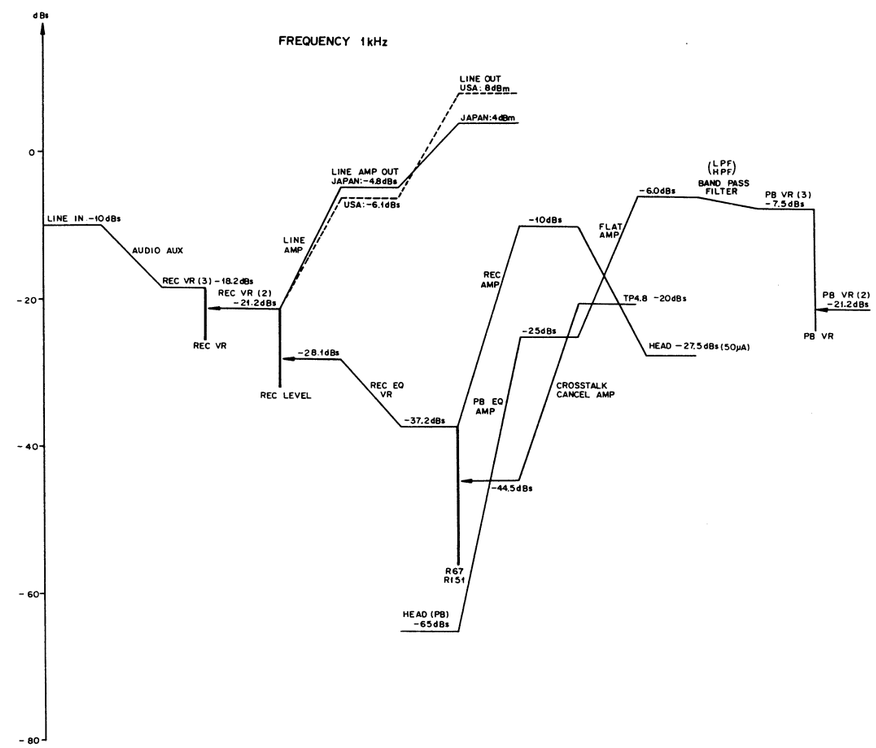

AUDIO-1 & 2 (NTSC, PS, PM)

BOARD NO : 1-588-750-12
BVH-1100A (NTSC) : # 20001-
BVH-1100APS : # 20001-
BVH-1100APM : # 20001-

AUDIO-3 BOARD — *COMPONENT SIDE* —

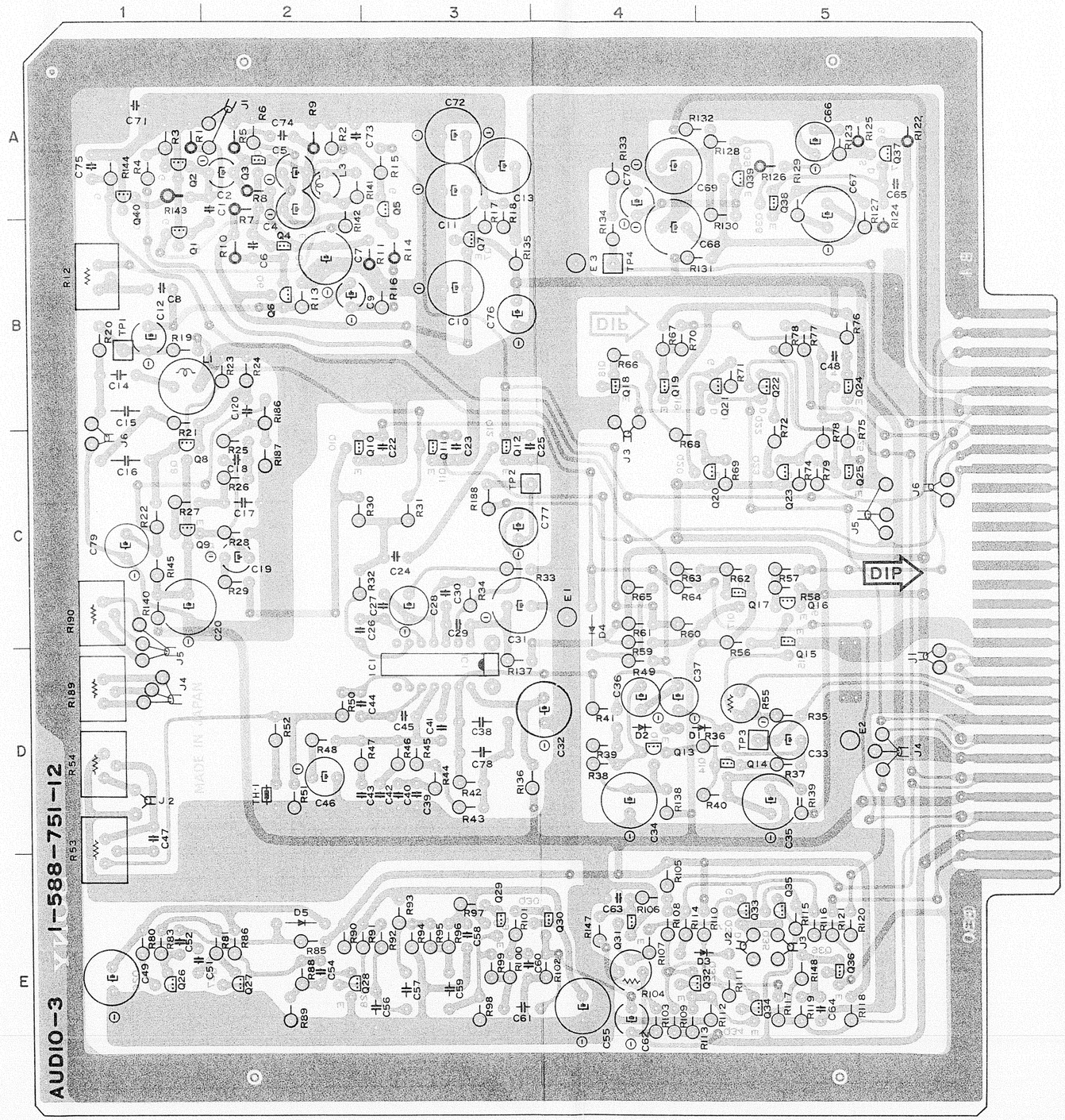

BVH-1100A
BVH-1100APS
BVH-1100APM
AUDIO-3 BOARD
1-588-751-12

D1 D - 4
D2 D - 4
D3 E - 4
D4 C - 4
D5 E - 2

E1 C - 4
E2 D - 5
E3 B - 4

IC1 D - 3

Q1 B - 1
Q2 A - 1
Q3 A - 2
Q4 B - 2
Q5 A - 3
Q6 B - 2
Q7 B - 3
Q8 C - 1
Q9 C - 1
Q10 C - 2
Q11 C - 3
Q12 C - 3
Q13 D - 4
Q14 D - 5
Q15 C - 5
Q16 C - 5
Q17 C - 5
Q18 B - 4
Q19 B - 4
Q20 C - 5
Q21 B - 5
Q22 B - 5
Q23 C - 5
Q24 B - 5
Q25 C - 5
Q26 E - 1
Q27 E - 2
Q28 E - 2
Q29 E - 3
Q30 E - 4
Q31 E - 4
Q32 E - 4
Q33 E - 5
Q34 E - 5
Q35 E - 5
Q36 E - 5
Q37 A - 5
Q38 A - 5
Q39 A - 5
Q40 A - 1

R12 B - 1
R53 D - 1
R54 D - 1
R55 D - 5
R104 E - 4
R189 D - 1
R190 C - 1

TP1 B - 1
TP2 C - 3
TP3 D - 5
TP4 B - 4

AUDIO-3 BOARD

Audio REC/PB Amplifier

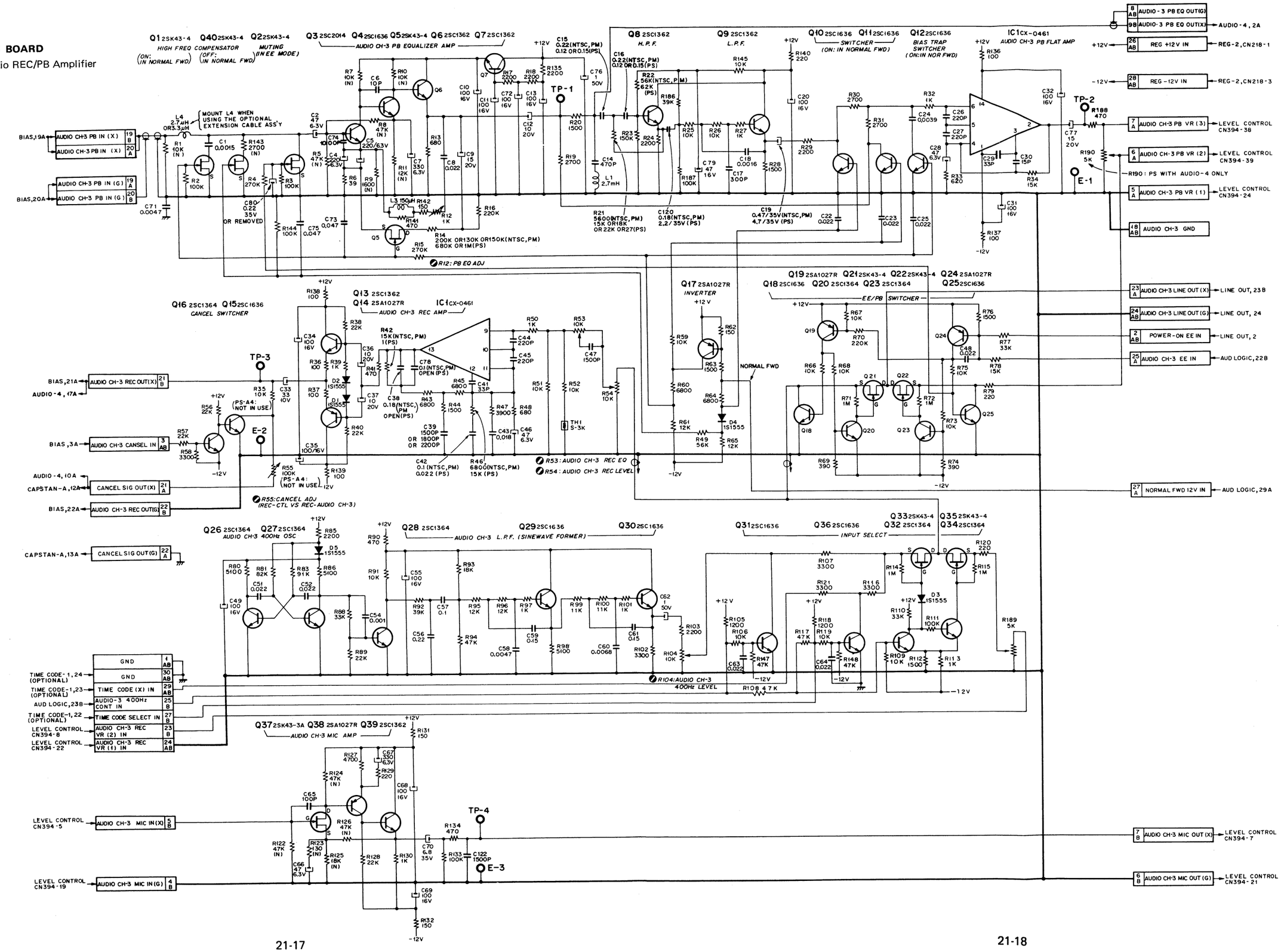

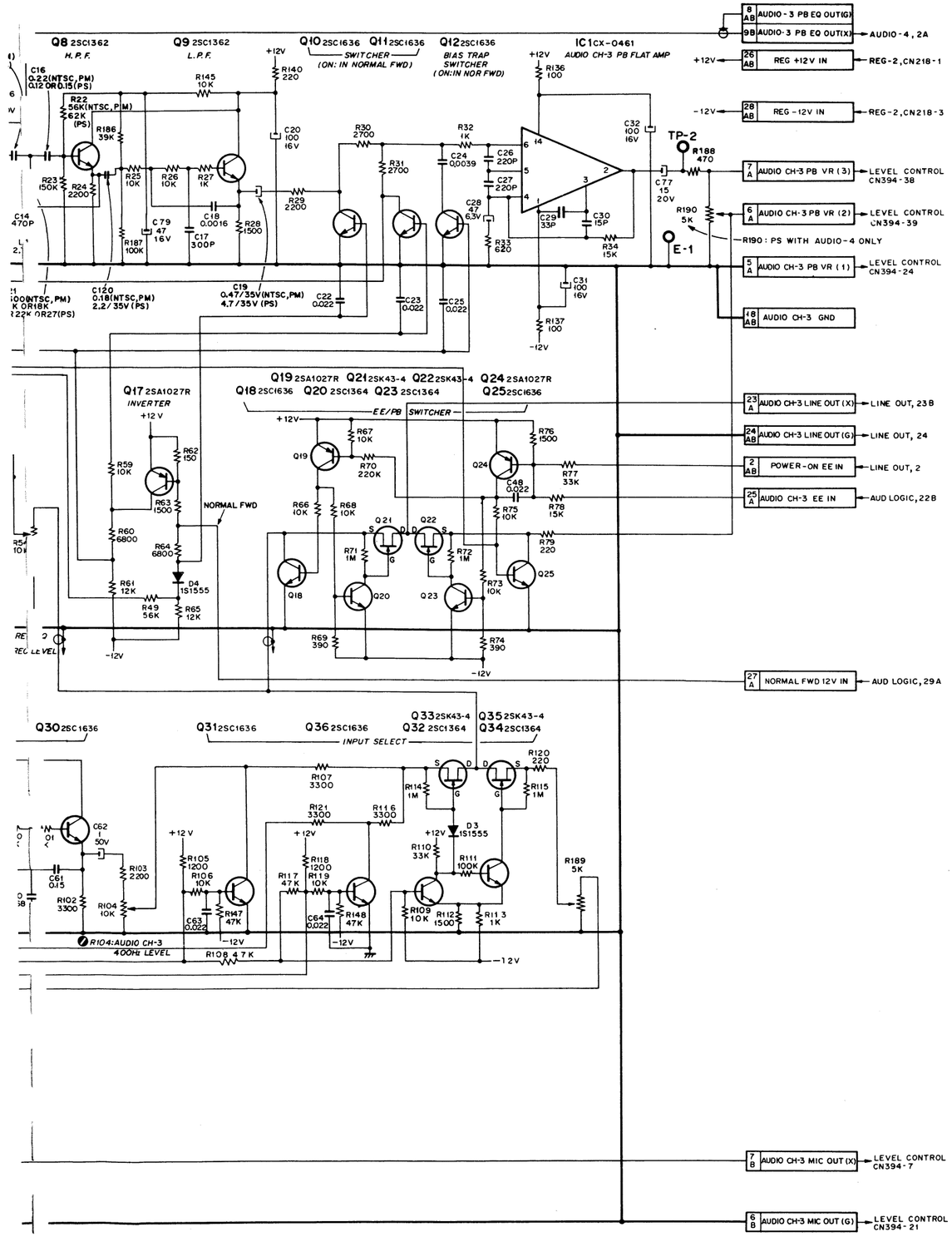

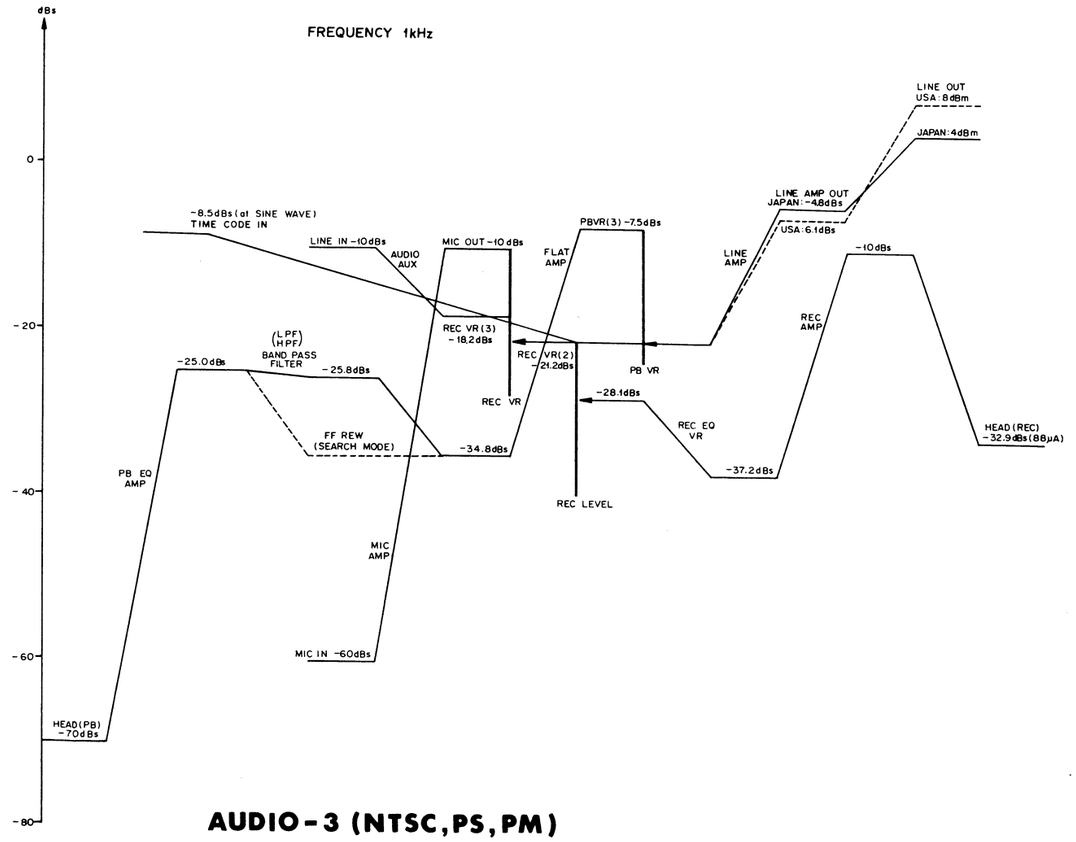

AUDIO-3 (NTSC,PS,PM)

BOARD NO. : 1-588-751-12
BVH-1100A(NTSC) : #20001-
BVH-1100APS : #20001-
BVH-1100APM : #20001-

AUDIO-4 BOARD — *COMPONENT SIDE* —

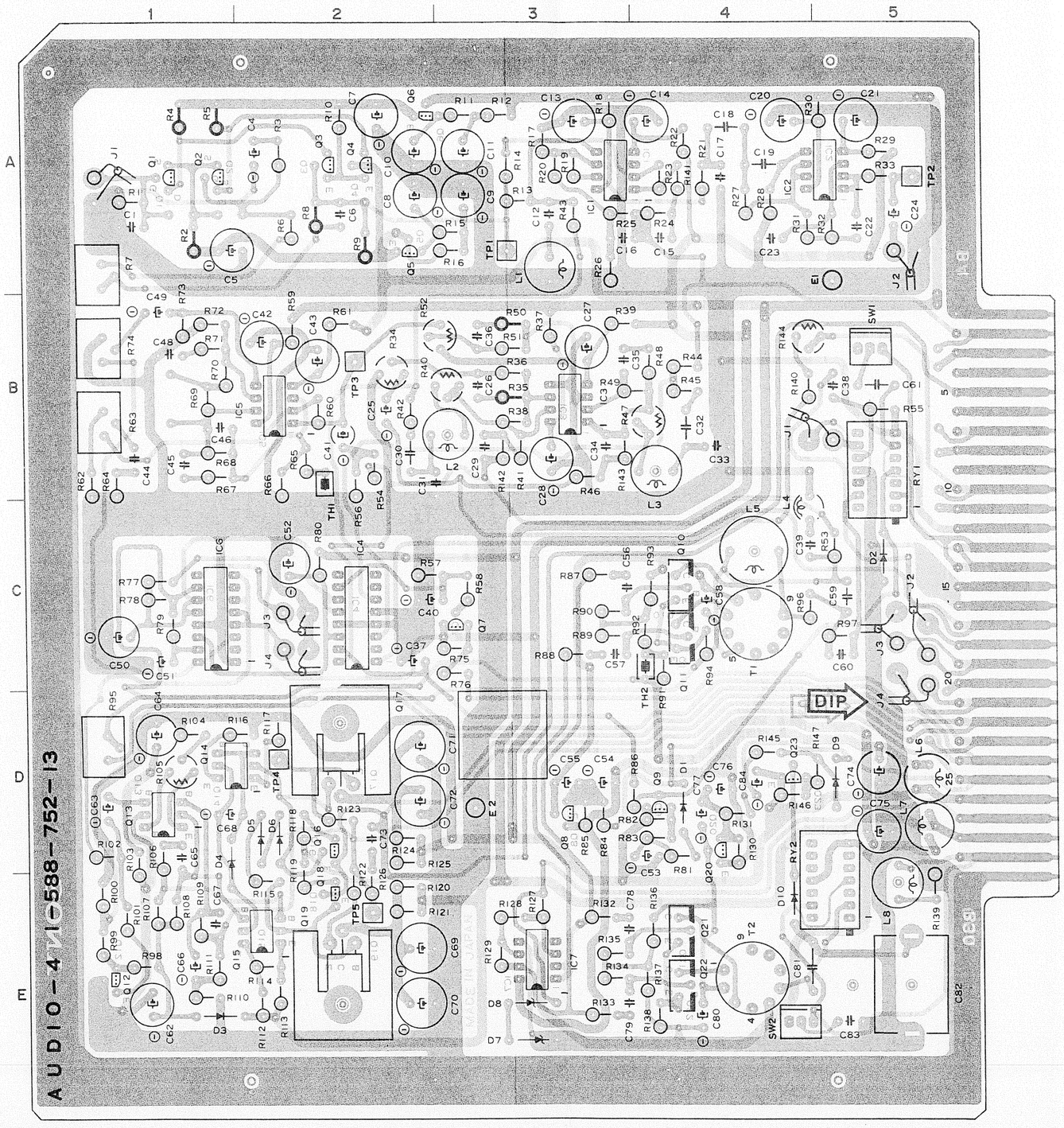

A4-M BOARD
— COMPONENT SIDE —

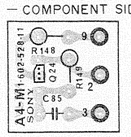

BVH-1100PS with A4
AUDIO-4 BOARD
1-588-752-13

C82 E - 5

D1 D - 4
D2 C - 5
D3 E - 1
D4 D - 1
D5 D - 2
D6 C - 2
D7 E - 3
D8 E - 3
D9 D - 5
D10 E - 4

E1 A - 5
E2 D - 3

IC1 A - 3
IC2 A - 5
IC3 C - 3
IC4 C - 2
IC5 B - 2
IC6 C - 1
IC7 E - 3

L2 B - 3
L3 B - 4
L5 C - 4
L8 E - 5

Q1 A - 1
Q2 A - 1
Q3 A - 2
Q4 A - 2
Q5 A - 2
Q6 A - 2
Q7 C - 3
Q8 D - 3
Q9 D - 4
Q10 C - 4
Q11 C - 4
Q12 E - 1
Q13 D - 1
Q14 D - 1
Q15 E - 2
Q16 D - 2
Q17 D - 2
Q18 D - 3
Q19 D - 3
Q20 D - 4
Q21 E - 4
Q22 E - 4
Q23 D - 4

R7 A - 1
R34 B - 2
R40 B - 3
R47 B - 4
R52 B - 3
R63 B - 1
R74 B - 1
R95 D - 1
R105 D - 1
R144 B - 4

SW1 B - 5
SW2 E - 4

TP1 A - 3
TP2 A - 5
TP3 B - 2
TP4 D - 2
TP5 E - 2

AUDIO-4 BOARD

Audio REC/PB LINE Amplifier

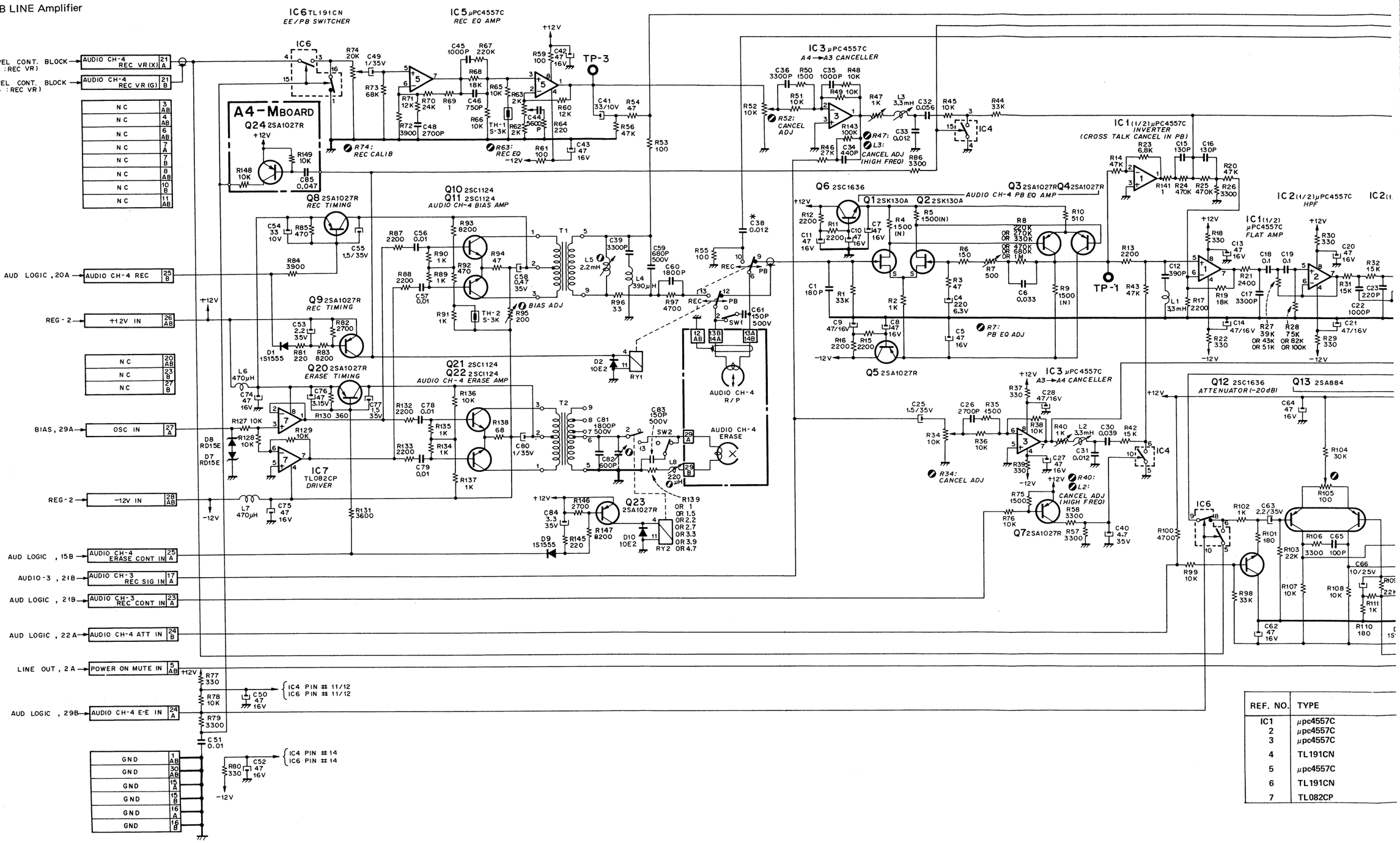

REF. NO.	TYPE
IC1	µpc4557C
2	µpc4557C
3	µpc4557C
4	TL191CN
5	µpc4557C
6	TL191CN
7	TL082CP

AUDIO-4

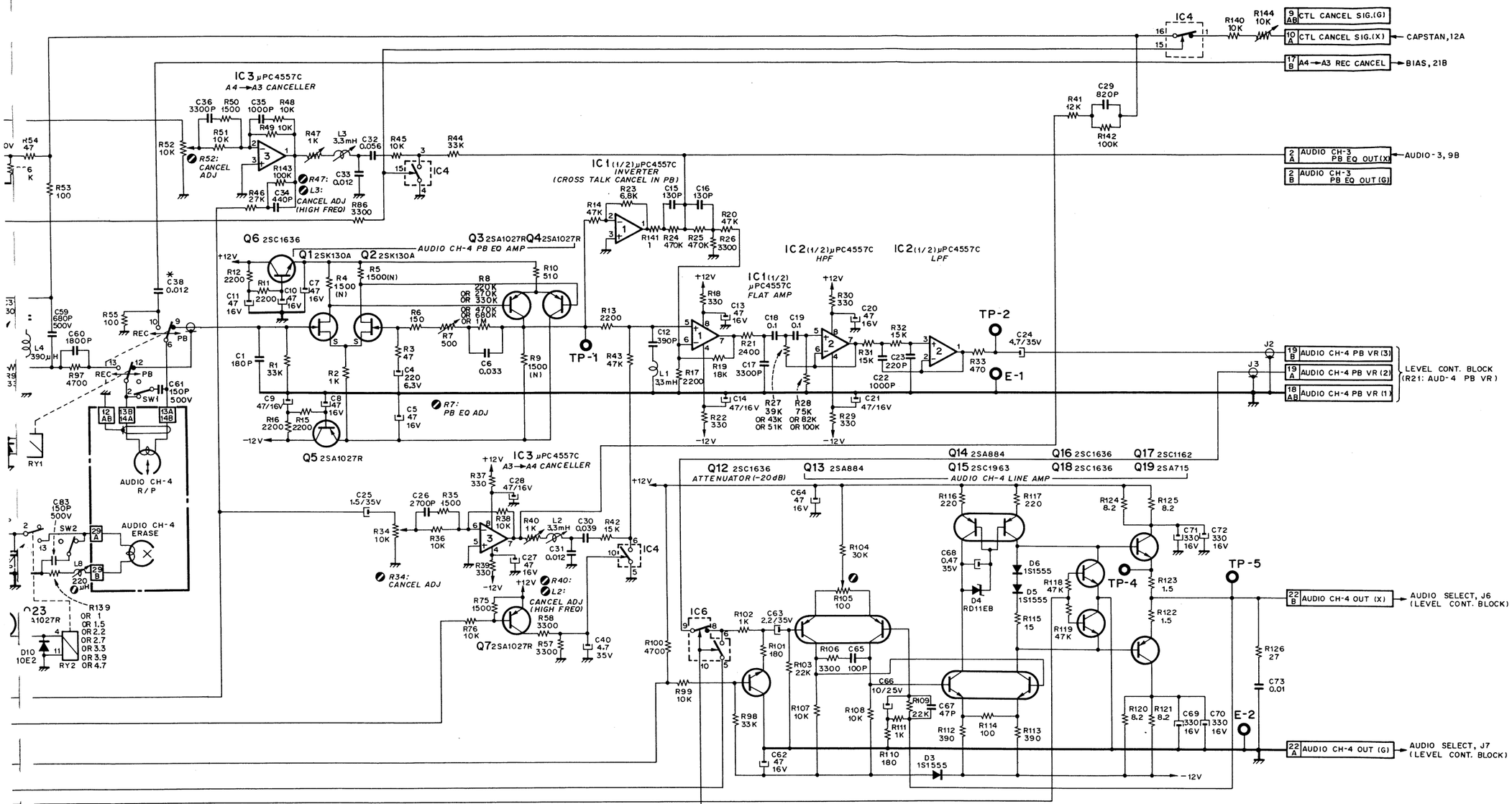

REF. NO.	TYPE	PIN NO.			
		+12V	−12V	+5V	GND
IC1	μpc4557C	8	4		
2	μpc4557C	8	4		
3	μpc4557C	8	4		
4	TL191CN	11,12 (VIA R77)	14 (VIA R80)		13
5	μpc4557C	8	4		
6	TL191CN	11,12 (VIA R77)	14 (VIA R80)		13
7	TL082CP	8	4		

AUDIO-4 (PS WITH-A4)

BOARD NO.: 1-588-752-13
BVH-1100APS : #20001-

REG-4 BOARD — *COMPONENT SIDE* —

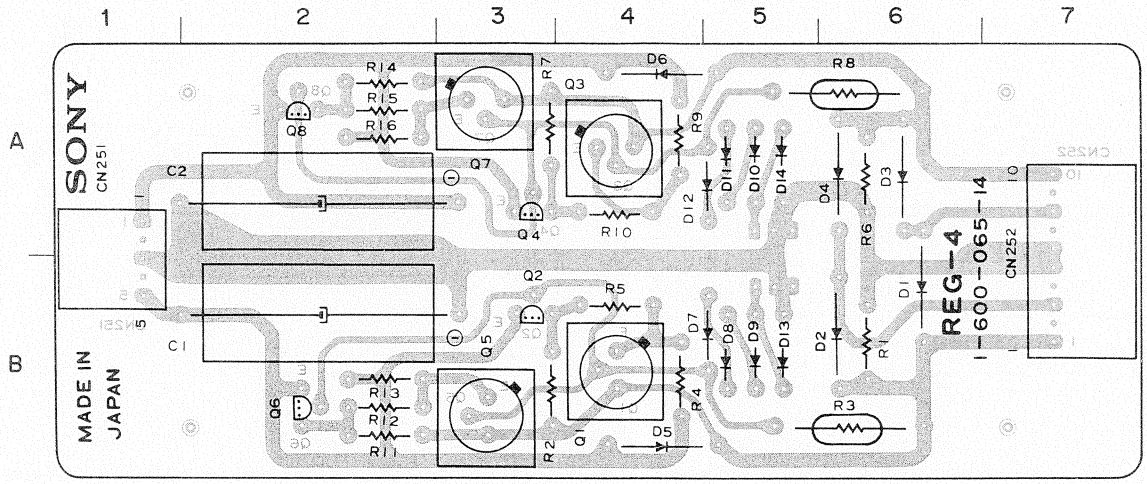

BVH-1100A (NTSC)
BVH-1100APS
BVH-1100APM
REG-4 BOARD
1-603-065-14

D1	B - 6
D2	B - 6
D3	A - 6
D4	A - 6
D5	B - 4
D6	A - 4
D7	B - 5
D8	B - 5
D9	B - 5
D10	A - 5
D11	A - 5
D12	A - 5
D13	B - 5
D14	A - 5

Q1	B - 4
Q2	B - 3
Q3	A - 4
Q4	A - 3
Q5	B - 3
Q6	B - 2
Q7	A - 3
Q8	A - 2

BD BOARD — *COMPONENT SIDE* —

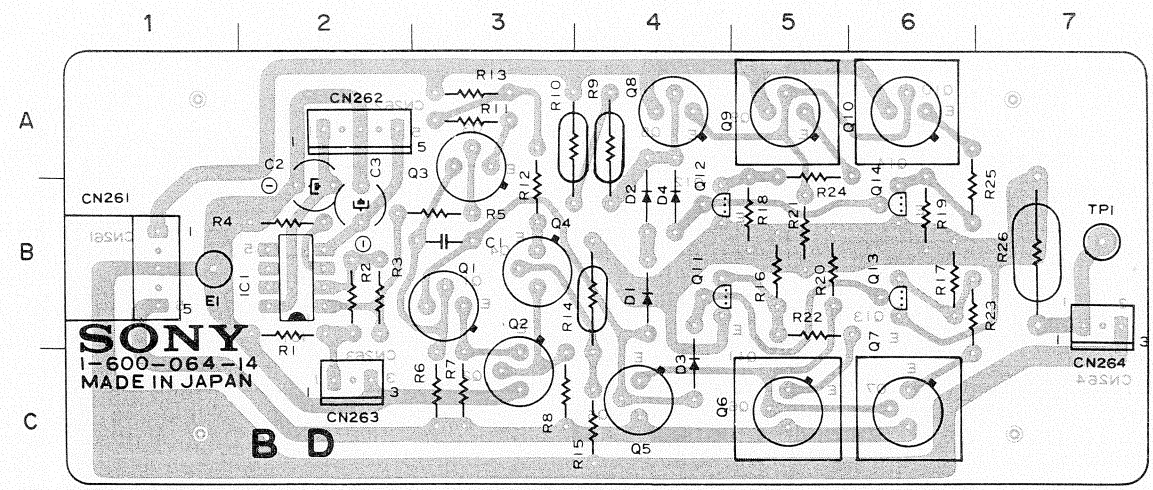

BVH-1100A (NTSC)
BVH-1100APS
BVH-1100APM
BD BOARD
1-600-064-14

D1	B - 4
D2	B - 4
D3	C - 4
D4	B - 4
E1	B - 1
IC1	B - 2

Q1	B - 3
Q2	C - 3
Q3	A - 3
Q4	B - 3
Q5	C - 4
Q6	C - 5
Q7	C - 6
Q8	A - 4
Q9	A - 5
Q10	A - 6
Q11	B - 4
Q12	B - 4
Q13	B - 6
Q14	B - 6
TP1	B - 7

BD & REG-4 BOARDS

DT Driver/Regulator

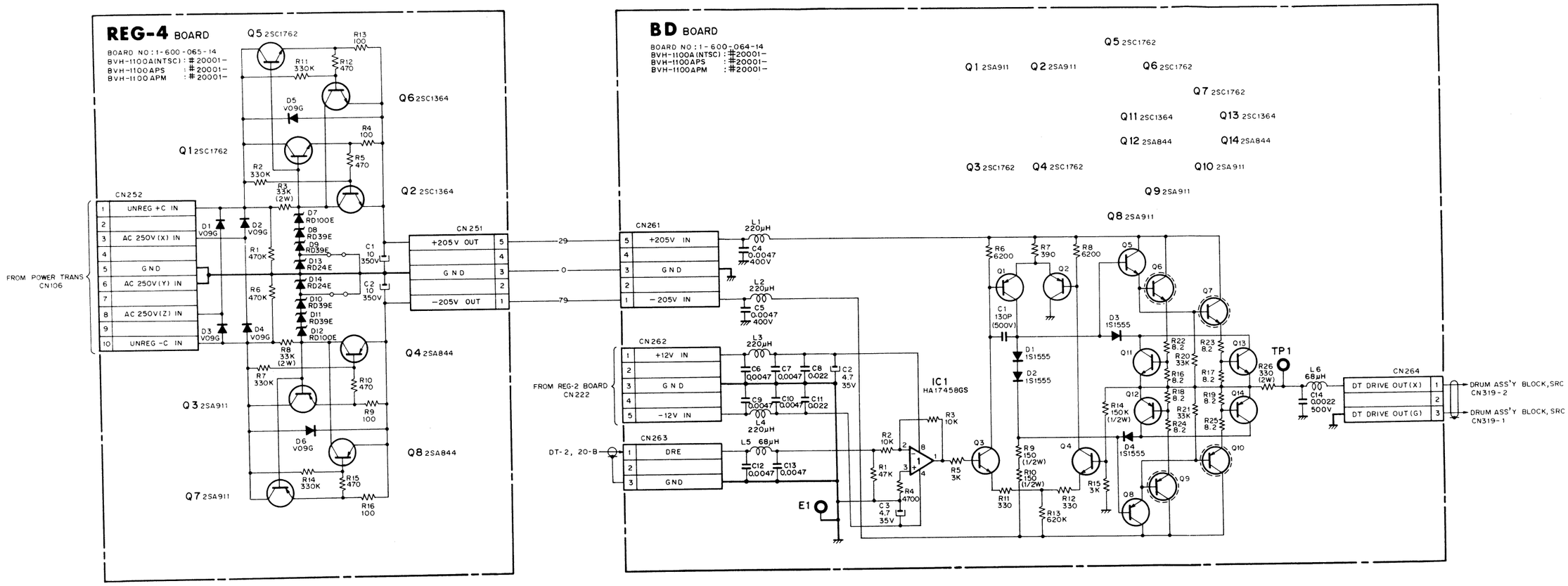

BIAS BIAS

BIAS BOARD — *COMPONENT SIDE* —

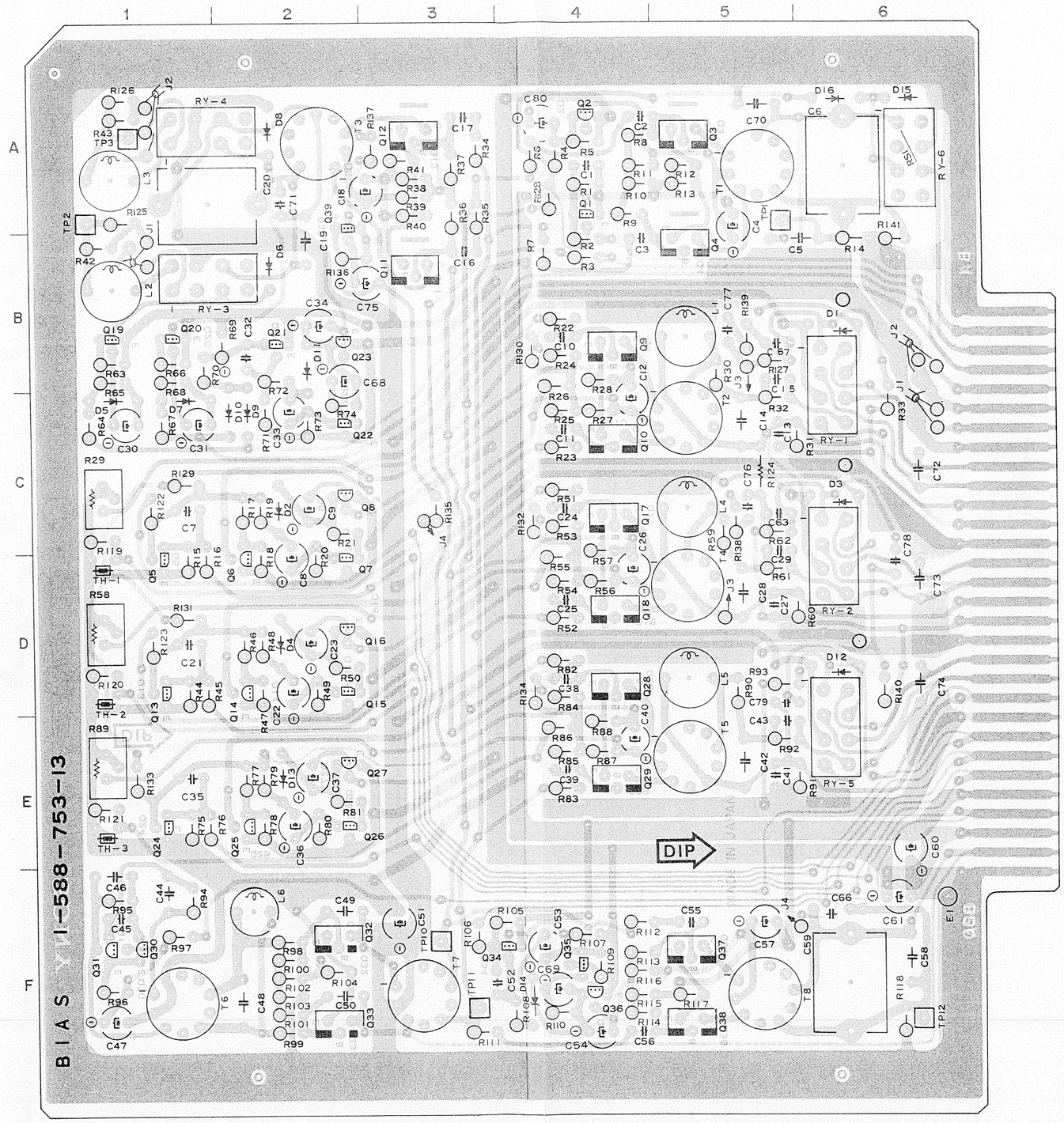

BVH-1100A (NTSC)
BVH-1100APS
BVH-1100APM
BIAS BOARD
1-588-753-13

C6 A - 6
C20 A - 2
C59 F - 6

D1 B - 6
D2 B - 4
D3 C - 6
D4 D - 2
D5 C - 1
D6 B - 2
D7 C - 1
D8 A - 2
D9 C - 2
D10 C - 2
D11 B - 2
D12 D - 6
D13 E - 2
D14 F - 4
D15 A - 6
D16 A - 6

E1 F - 6

L1 B - 5
L2 B - 1
L3 A - 1
L4 C - 5
L5 D - 5
L6 F - 2

Q1 A - 4
Q2 A - 4
Q3 A - 1
Q4 B - 1
Q5 D - 1
Q6 D - 2
Q7 D - 2
Q8 C - 2
Q9 B - 4
Q10 C - 4
Q11 E - 4
Q12 A - 3
Q13 D - 1
Q14 D - 2
Q15 D - 2
Q16 D - 2
Q17 C - 4
Q18 D - 4
Q19 B - 1
Q20 B - 1
Q21 B - 2
Q22 C - 2
Q23 B - 2
Q24 E - 1
Q25 E - 2
Q26 E - 2
Q27 E - 2
Q28 D - 4
Q29 E - 4
Q30 F - 1
Q31 F - 1
Q32 E - 2
Q33 E - 2
Q34 F - 3
Q35 F - 4
Q36 F - 4
Q37 F - 6
Q38 F - 6
Q39 F - 2

R29 C - 1
R58 D - 1
R89 E - 1

TP1 A - 5
TP2 A - 1
TP3 A - 1
TP10 F - 3
TP11 F - 3
TP12 F - 6

BIAS BOARD

Audio Bias/Erase Oscillator

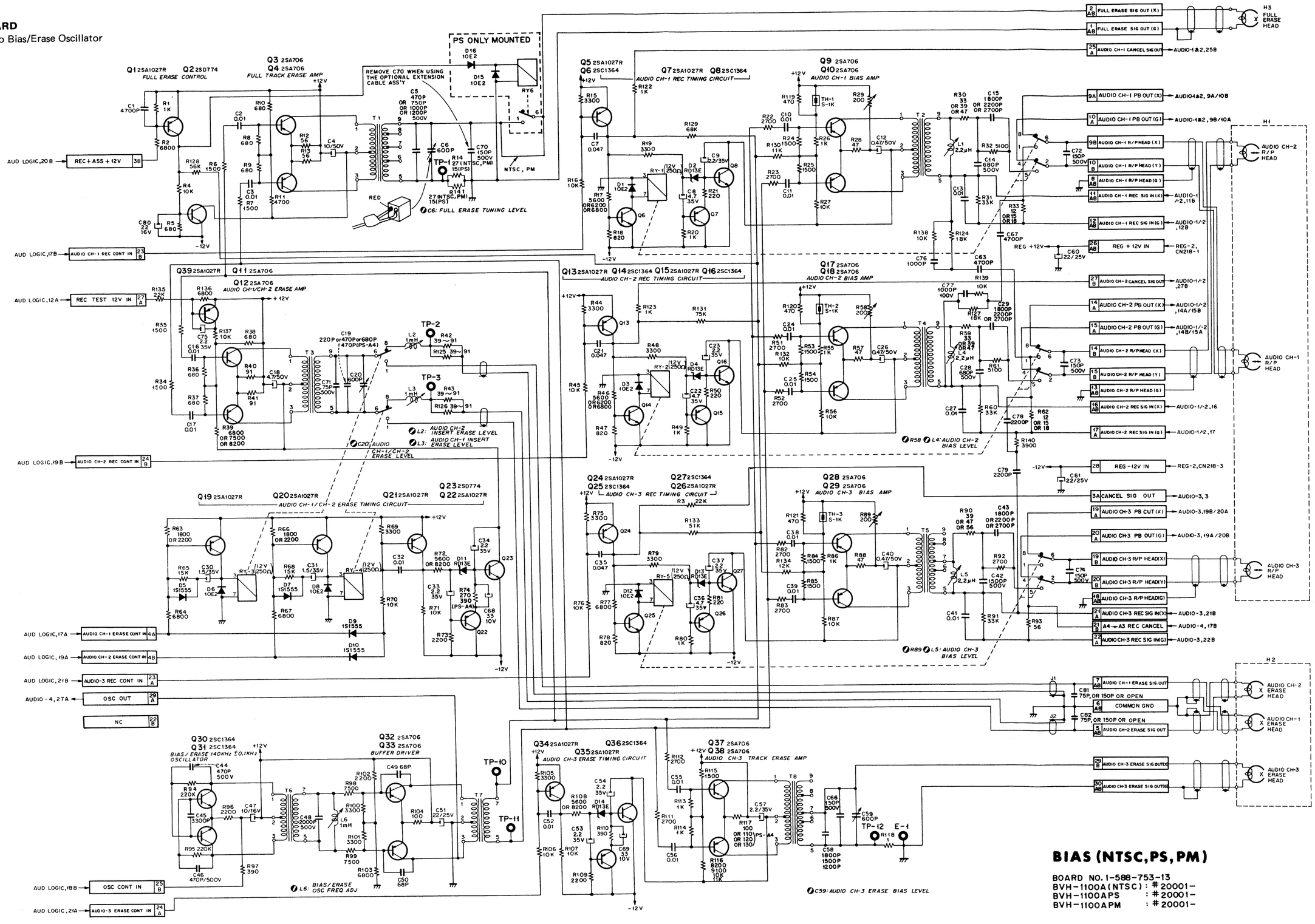

BIAS (NTSC,PS,PM)

BOARD NO. 1-588-753-13
BVH-1100A(NTSC) : #20001-
BVH-1100APS : #20001-
BVH-1100APM : #20001-

CAPSTAN-A CAPSTAN-A

CAPSTAN-A BOARD — *COMPONENT SIDE* —

FORMER
NTSC; # 20001 – 20499
PS ; # 20001 – 20399

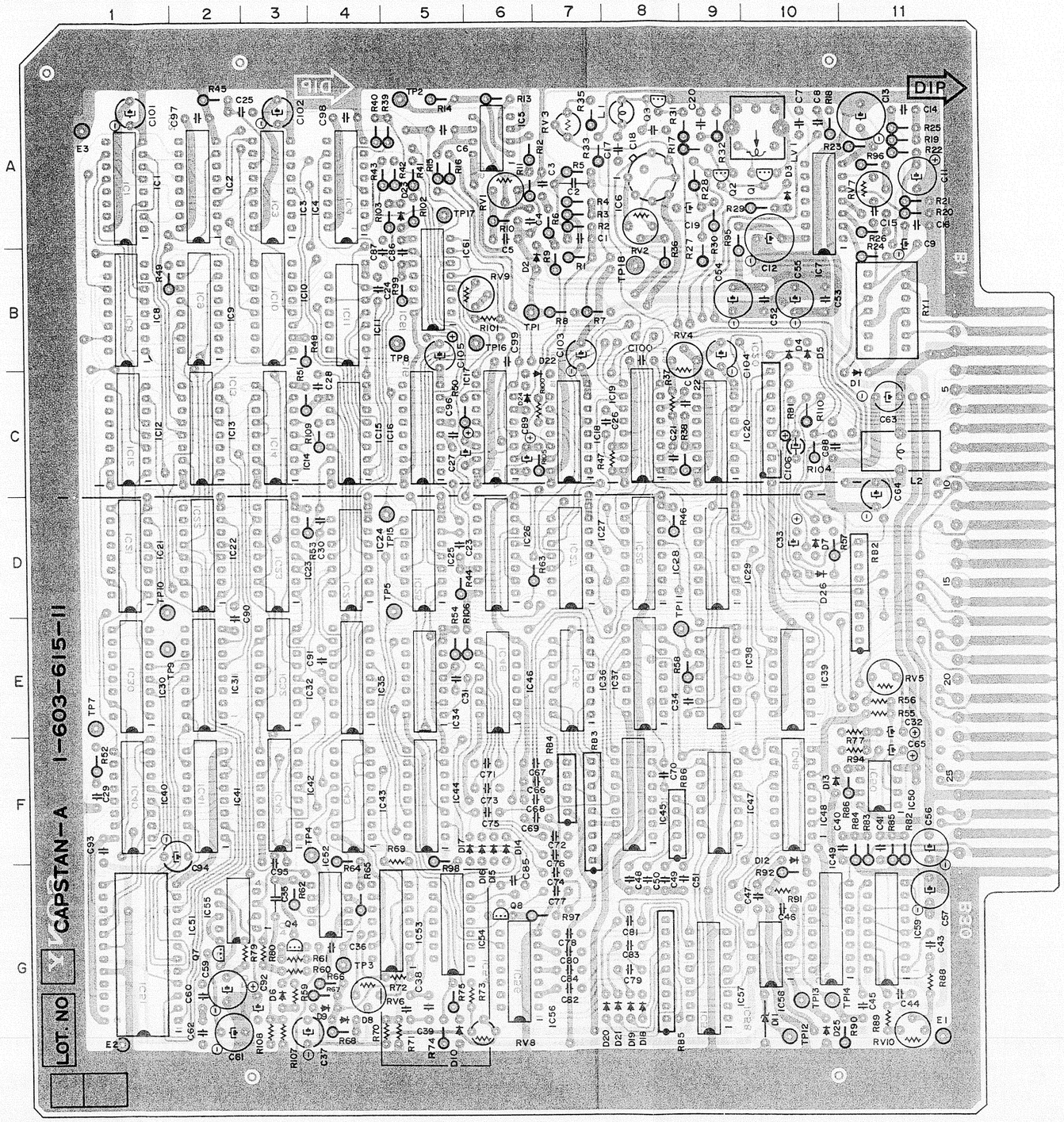

NC BOARD
— CONPONENT SIDE —

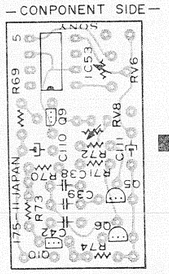

BVH-1100A (NTSC)
BVH-1100APS
CAPSTAN-A BOARD
1-603-615-11

D1	C - 11	LV1	A - 10
D2	B - 6		
D3	A - 10	Q1	A - 10
D4	B - 10	Q2	A - 9
D5	B - 10	Q3	A - 8
D6	G - 3	Q4	G - 3
D7	D - 10	Q5	G - 5
D8	G - 4	Q6	G - 5
D9	G - 4	Q7	G - 2
D11	G - 10	Q8	G - 6
D12	F - 10	Q9	G - 4
D13	F - 10	Q10	G - 4
D14	F - 6		
D15	G - 6	RV1	A - 6
D16	G - 6	RV2	A - 8
D17	F - 5	RV3	A - 7
D18	G - 8	RV4	B - 8
D19	G - 8	RV5	E - 11
D20	G - 7	RV6	G - 5
D21	G - 8	RV7	A - 11
D22	B - 7	RV8	G - 6
D23	A - 5	RV9	B - 6
D25	G - 10	RV10	G - 11
D26	D - 10		
		TP1	B - 6
E1	G - 11	TP2	A - 5
E2	G - 1	TP3	G - 4
E3	A - 1	TP4	F - 3
		TP5	D - 5
IC1	A - 1	TP7	C - 1
IC2	A - 2	TP8	B - 5
IC3	A - 3	TP9	E - 1
IC4	A - 4	TP10	D - 1
IC5	A - 6	TP11	E - 8
IC6	A - 8	TP12	G - 10
IC7	A - 10	TP13	G - 10
IC8	B - 1	TP14	G - 10
IC9	B - 2	TP15	D - 5
IC10	B - 3	TP16	B - 6
IC11	B - 4	TP17	A - 5
IC12	C - 1	TP18	B - 8
IC13	C - 2		
IC14	C - 3		
IC15	C - 4		
IC16	C - 5		
IC17	C - 6		
IC18	C - 7		
IC19	C - 8		
IC20	C - 9		
IC21	D - 1		
IC22	D - 2		
IC23	D - 3		
IC24	D - 4		
IC25	D - 5		
IC26	D - 6		
IC27	D - 7		
IC28	D - 8		
IC29	D - 9		
IC30	E - 1		
IC31	E - 2		
IC32	E - 3		
IC34	E - 5		
IC35	E - 4		
IC36	E - 7		
IC37	E - 8		
IC38	E - 9		
IC39	E - 10		
IC40	F - 1		
IC41	F - 2		
IC42	F - 3		
IC43	F - 4		
IC44	F - 5		
IC45	E - 8		
IC46	E - 6		
IC47	F - 9		
IC48	F - 10		
IC49	G - 10		
IC50	F - 11		
IC51	G - 1		
IC52	G - 4		
IC53	G - 4		
IC55	G - 2		
IC56	G - 6		
IC57	G - 9		
IC58	G - 10		
IC59	G - 11		
IC61	B - 5		

FORMER
NTSC; # 20001 – 20499
PS ; # 20001 – 20399

CAPSTAN-A BOARD

Capstan Servo

FORMER
NTSC; # 20001 – 20499
PS ; # 20001 – 20399

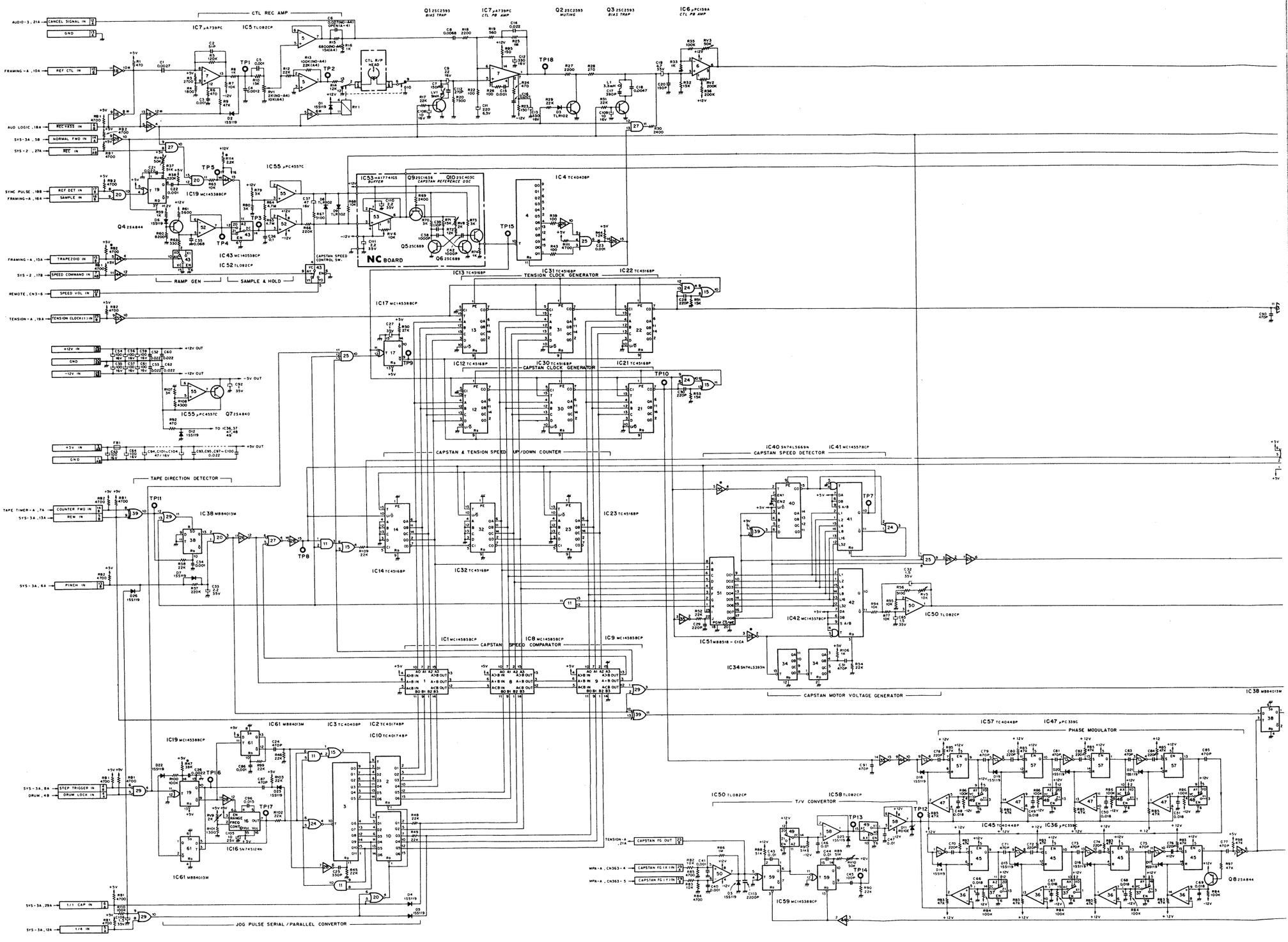

21-29 (5/7)

21-29 (6/7)

CAPSTAN-A

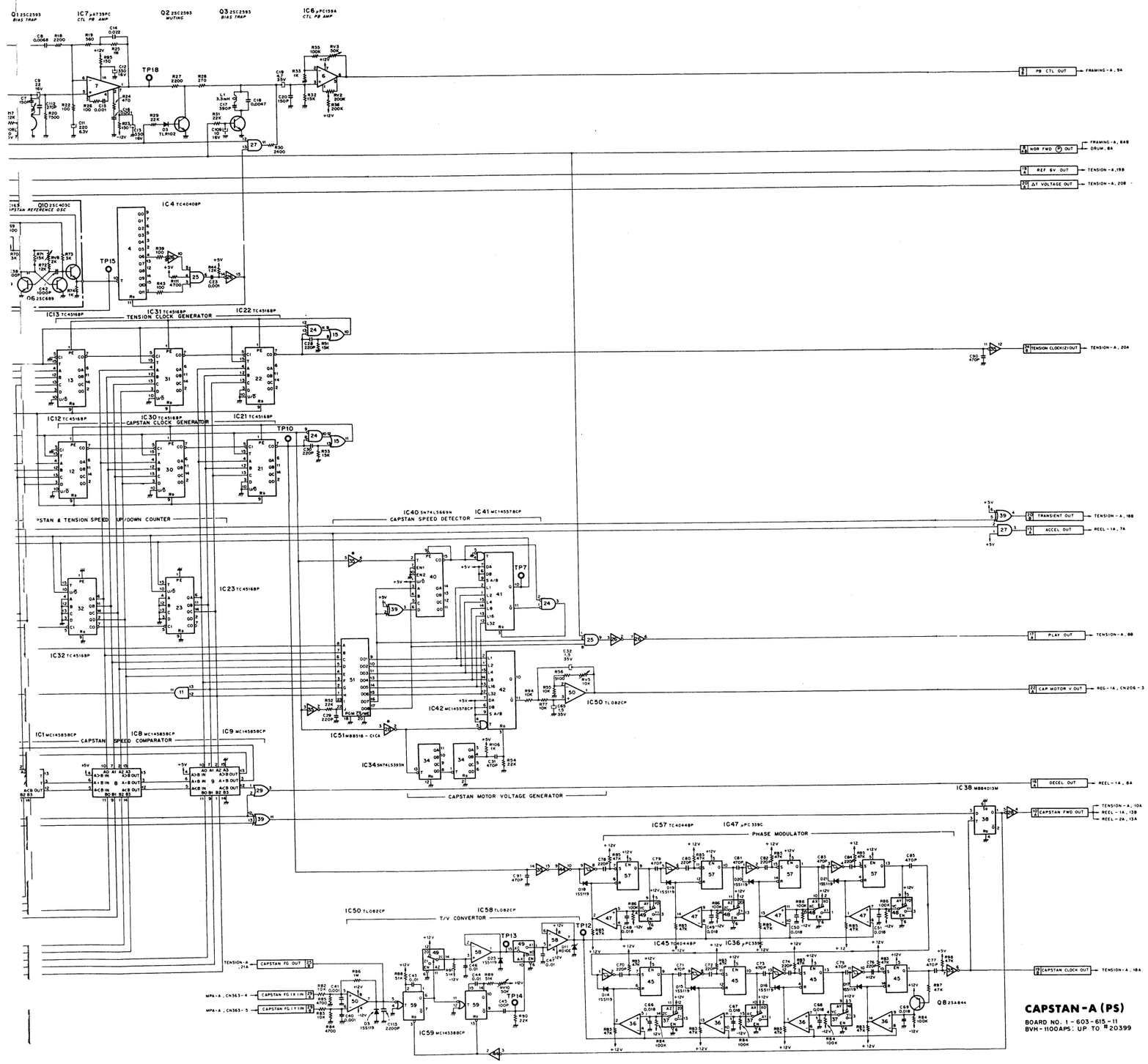

CAPSTAN-A (PS)

BOARD NO. 1-603-615-11
8VH-1100APS: UP TO #20399

REF. NO.	TYPE	+12V	-12V	+5V	GND
IC1	MC14585BCP			16	8
2	TC40174BP (MC14174BCP)			16	8
3	TC4040BP (CD4040BE)			16	8
4	TC4040BP (CD4040BE)			16	8
5	TL082CP	8	4		
6	μPC158A	7	4		
7	μA739PC	14	7		
8	MC14585BCP			16	8
9	MC14585BCP			16	8
10	TC40174BP (MC14174BCP)			16	8
11	TC4081BP (CD4081BE)			14	7
12	TC4516BP (MC14516BCP)			16	8
13	TC4516BP (MC14516BCP)			16	8
14	TC4516BP (MC14516BCP)			16	8
15	TC4071BP (CD4071BE)			14	7
16	SN74S124N			15, 16	8, 9
17	HD14538BP (MC14538BCP)			16	8
18	M53206P (SN7406N)			14	7
19	HD14538BP (MC14538BCP)			16	8
20	TC4001BP (CD4001BE)			14	7
21	TC4516BP (MC14516BCP)			16	8
22	TC4516BP (MC14516BCP)			16	8
23	TC4516BP (MC14516BCP)			16	8
24	TC4001BP (CD4001BE)			14	7
25	TC4073BP (CD4073BE)			14	7
26	TC4049BP (CD4049BE)			16	8
27	TC4081BP (CD4081BE)			14	7
28	TC4049BP (CD4049BE)			16	8
29	TC4071BP (CD4071BE)			14	7
30	TC4516BP (MC14516BCP)			16	8
31	TC4516BP (MC14516BCP)			16	8
32	TC4516BP (MC14516BCP)			16	8
34	SN74LS393N			14	7
35	TC4049BP (CD4049BE)			16	8
36	μPC339C			3	12
37	μPD4053BC (CD4053BE)			16	8
38	MB84013M (CD4013BE)			14	7
39	MC14070BCP			14	7
40	SN74LS669N			16	8
41	MC14557BCP			16	8
42	MC14557BCP			16	8
43	μPD4053BC (CD4053BE)			16	8
44	TC5020BP			16	8
45	TC4044BP (CD4044BE)			16	8
46	MC14584BCP			14	7
47	μPC339C			3	12
48	μPD4053BC (CD4053BE)			16	8
49	μPD4053BC (CD4053BE)			16	8
50	TL082CP	8	4		
51	MB8518H-C1CA			24	12
52	TL082CP	8	4		
53	HA1774105	7	4		
55	μPC4557C	8	4		
56	MC14584BCP			14	7
57	TC4044BP (CD4044BE)			16	8
58	TL082CP	8	4		
59	HD14538BP (MC14538BCP)			16	8
61	MB84013M (CD4013BE)			14	7

FORMER
NTSC; #20001 – 20499
PS ; #20001 – 20399

*CHANGED

	UP TO #20099	#20101 & UP
R112 R113	+12V R112 200 TO R83,R85 R113 820	DELETED
IC46 IC56	TC4068BP	MC14584BCP
R114	NOT IN USE	2200
RB2		+5V RB2

	UP TO #20199	#20201 & UP
R47	33K	39K
IC28 IC35	Q10 (NC BOARD) TP18 R74 TO IC42-3, IC40-2	Q10 (NC BOARD) TP18 R74 TO IC42-2 TO IC40-3

IC 51
MB8518-C1CA
PROGRAMMED DATA

WORD (ADDRESS)	DATA OUTPUTS (IN HEXADECIMAL)
0 – 15	74, 74, 74, 74, 71, 6D, 69, E1, DF, E0, 20, 1F, 1E, 1D, 1C, 1B,
16 – 31	1A, 19, 19, 19, 18, 18, 18, 18, 17, 17, 17, 16, 16, 16, 15, 15, 15,
32 – 47	95, 95, 95, 95, 95, 95, 95, 95, 95, 95, 95, 95, 95, 95, 95, 95,
48 – 63	95, 95, 95, 9, 95, 95, 95, 95, 95, 95, 95, 95, 95, 95, 95, 95,
64 – 79	94, 94, 94, 94, 94, 94, 94, 94, 94, 94, 94, 94, 94, 94, 94, 94,
80 – 95	94, 94, 94, 94, 94, 94, 94, 94, 94, 94, 94, 94, 94, 94, 94, 94,
96 – 111	93, 93, 93, 93, 93, 93, 93, 93, 93, 93, 93, 93, 93, 93, 93, 93,
112 – 127	93, 93, 93, 93, 93, 93, 93, 93, 93, 93, 93, 93, 93, 93, 93, 93,
128 – 143	93, 93, 93, 93, 93, 93, 93, 93, 93, 93, 93, 93, 93, 93, 93, 93,
144 – 159	93, 93, 93, 93, 93, 93, 93, 93, 93, 93, 93, 93, 93, 93, 93, 93,
160 – 175	93, 93, 93, 93, 93, 93, 93, 93, 93, 93, 93, 93, 93, 93, 93, 93,
176 – 191	93, 93, 93, 93, 93, 93, 93, 93, 93, 93, 93, 93, 93, 93, 93, 93,
192 – 207	93, 93, 93, 93, 93, 93, 93, 93, 93, 93, 93, 93, 93, 93, 93, 93,
208 – 223	93, 93, 93, 93, 93, 93, 93, 93, 93, 93, 93, 93, 93, 93, 93, 93,
224 – 239	93, 93, 93, 93, 93, 93, 93, 93, 93, 93, 93, 93, 93, 93, 93, 93,
240 – 255	93, 93, 93, 93, 93, 93, 93, 93, 93, 93, 93, 93, 93, 93, 93, 93,
256 – 271	74, 74, 74, 74, 74, 71, 6D, 69, E1, DF, E0, 20, 1F, 1E, 1D, 1C, 1B,
272 – 287	1A, 19, 19, 19, 18, 18, 18, 18, 17, 17, 17, 16, 16, 16, 15, 15, 15,
288 – 303	95, 95, 95, 95, 95, 95, 95, 95, 95, 95, 95, 95, 95, 95, 95, 95,
304 – 319	95, 95, 95, 95, 95, 95, 95, 95, 95, 95, 95, 95, 95, 95, 95, 95,
320 – 335	94, 94, 94, 94, 94, 94, 94, 94, 94, 94, 94, 94, 94, 94, 94, 94,
336 – 351	94, 94, 94, 94, 94, 94, 94, 94, 94, 94, 94, 94, 94, 94, 94, 94,
352 – 367	93, 93, 93, 93, 93, 93, 93, 93, 93, 93, 93, 93, 93, 93, 93, 93,
368 – 383	93, 93, 93, 93, 93, 93, 93, 93, 93, 93, 93, 93, 93, 93, 93, 93,
384 – 399	93, 93, 93, 93, 93, 93, 93, 93, 93, 93, 93, 93, 93, 93, 93, 93,
400 – 415	93, 93, 93, 93, 93, 93, 93, 93, 93, 93, 93, 93, 93, 93, 93, 93,
416 – 431	93, 93, 93, 93, 93, 93, 93, 93, 93, 93, 93, 93, 93, 93, 93, 93,
432 – 447	93, 93, 93, 93, 93, 93, 93, 93, 93, 93, 93, 93, 93, 93, 93, 93,
448 – 463	93, 93, 93, 93, 93, 93, 93, 93, 93, 93, 93, 93, 93, 93, 93, 93,
464 – 479	93, 93, 93, 93, 93, 93, 93, 93, 93, 93, 93, 93, 93, 93, 93, 93,
480 – 496	93, 93, 93, 93, 93, 93, 93, 93, 93, 93, 93, 93, 93, 93, 93, 93,
496 – 511	93, 93, 93, 93, 93, 93, 93, 93, 93, 93, 93, 93, 93, 93, 93, 93,
512 – 527	7F, 7F, 7F, 7F, 7F, 7F, 78, 68, E6, D9, D1, 15, 15, 10, 10, 0A, 0A,
528 – 543	0A, 08, 07, 06, 05, 05, 05, 05, 05, 04, 04, 04, 04, 04, 04,
544 – 559	83, 83, 83, 83, 83, 83, 83, 83, 83, 83, 83, 83, 83, 83, 83, 83,
560 – 575	83, 83, 83, 83, 83, 83, 83, 83, 83, 83, 83, 83, 83, 83, 83, 83,
576 – 591	80, 80, 80, 80, 80, 80, 80, 80, 80, 80, 80, 80, 80, 80, 80, 80,
592 – 607	80, 80, 80, 80, 80, 80, 80, 80, 80, 80, 80, 80, 80, 80, 80, 80,
608 – 623	80, 80, 80, 80, 80, 80, 80, 80, 80, 80, 80, 80, 80, 80, 80, 80,
624 – 639	80, 80, 80, 80, 80, 80, 80, 80, 80, 80, 80, 80, 80, 80, 80, 80,
640 – 655	80, 80, 80, 80, 80, 80, 80, 80, 80, 80, 80, 80, 80, 80, 80, 80,
656 – 671	80, 80, 80, 80, 80, 80, 80, 80, 80, 80, 80, 80, 80, 80, 80, 80,
672 – 687	80, 80, 80, 80, 80, 80, 80, 80, 80, 80, 80, 80, 80, 80, 80, 80,
688 – 703	80, 80, 80, 80, 80, 80, 80, 80, 80, 80, 80, 80, 80, 80, 80, 80,
704 – 719	80, 80, 80, 80, 80, 80, 80, 80, 80, 80, 80, 80, 80, 80, 80, 80,
720 – 735	80, 80, 80, 80, 80, 80, 80, 80, 80, 80, 80, 80, 80, 80, 80, 80,
736 – 751	80, 80, 80, 80, 80, 80, 80, 80, 80, 80, 80, 80, 80, 80, 80, 80,
752 – 767	80, 80, 80, 80, 80, 80, 80, 80, 80, 80, 80, 80, 80, 80, 80, 80,
768 – 783	7F, 7F, 7F, 7F, 7D, 69, 5E, DE, D9, D1, 10, 10, 0A, 0A, 07, 07,
784 – 799	07, 05, 05, 05, 03, 03, 03, 03, 02, 02, 02, 02, 02, 02, 02, 02,
800 – 815	81, 81, 81, 81, 81, 81, 81, 81, 81, 81, 81, 81, 81, 81, 81, 81,
816 – 831	81, 81, 81, 81, 81, 81, 81, 81, 81, 81, 81, 81, 81, 81, 81, 81,
832 – 847	80, 80, 80, 80, 80, 80, 80, 80, 80, 80, 80, 80, 80, 80, 80, 80,
848 – 863	80, 80, 80, 80, 80, 80, 80, 80, 80, 80, 80, 80, 80, 80, 80, 80,
864 – 879	80, 80, 80, 80, 80, 80, 80, 80, 80, 80, 80, 80, 80, 80, 80, 80,
880 – 895	80, 80, 80, 80, 80, 80, 80, 80, 80, 80, 80, 80, 80, 80, 80, 80,
896 – 911	80, 80, 80, 80, 80, 80, 80, 80, 80, 80, 80, 80, 80, 80, 80, 80,
912 – 927	80, 80, 80, 80, 80, 80, 80, 80, 80, 80, 80, 80, 80, 80, 80, 80,
928 – 943	80, 80, 80, 80, 80, 80, 80, 80, 80, 80, 80, 80, 80, 80, 80, 80,
944 – 959	80, 80, 80, 80, 80, 80, 80, 80, 80, 80, 80, 80, 80, 80, 80, 80,
960 – 975	80, 80, 80, 80, 80, 80, 80, 80, 80, 80, 80, 80, 80, 80, 80, 80,
976 – 991	80, 80, 80, 80, 80, 80, 80, 80, 80, 80, 80, 80, 80, 80, 80, 80,
992 – 1007	80, 80, 80, 80, 80, 80, 80, 80, 80, 80, 80, 80, 80, 80, 80, 80,
1008 – 1023	80, 80, 80, 80, 80, 80, 80, 80, 80, 80, 80, 80, 80, 80, 80, 80,

CAPSTAN-A BOARD — *COMPONENT SIDE* —

NEW
NTSC; # 20501 –
PS ; # 20401 –

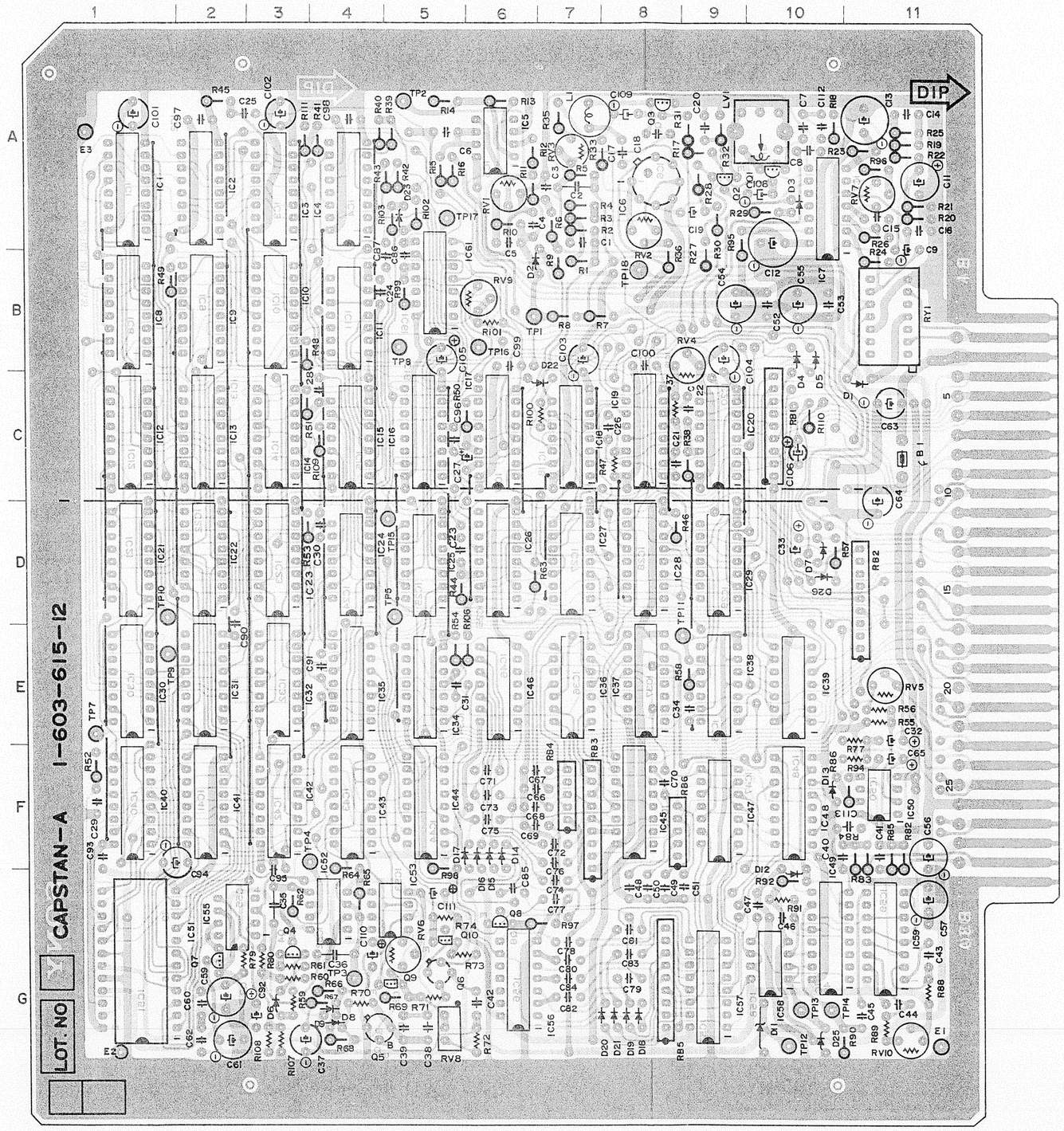

BVH-1100A (NTSC)
BVH-1100APS
BVH-1100APS
CAPSTAN-A BOARD
1-603-615-12

D1 C - 11
D2 B - 6
D3 A - 10
D4 B - 10
D5 B - 10
D6 G - 3
D7 D - 10
D8 G - 4
D9 G - 4
D11 G - 10
D12 F - 10
D13 F - 10
D14 F - 6
D15 G - 6
D16 G - 6
D17 F - 5
D18 G - 8
D19 G - 8
D20 G - 7
D21 G - 8
D22 B - 7
D23 A - 5
D25 G - 10
D26 D - 10

E1 G - 11
E2 G - 1
E3 A - 1

IC1 A - 1
IC2 A - 2
IC3 A - 3
IC4 A - 4
IC5 A - 6
IC6 A - 8
IC7 A - 10
IC8 B - 1
IC9 B - 2
IC10 B - 3
IC11 B - 4
IC12 C - 1
IC13 C - 2
IC14 C - 3
IC15 C - 4
IC16 C - 5
IC17 C - 6
IC18 C - 7
IC19 C - 8
IC20 C - 9
IC21 D - 1
IC22 D - 2
IC23 D - 3
IC24 D - 4
IC25 D - 5
IC26 D - 6
IC27 D - 7
IC28 D - 8
IC29 D - 9
IC30 E - 1
IC31 E - 2
IC32 E - 3
IC34 E - 5
IC35 E - 4
IC36 E - 7
IC37 E - 8
IC38 E - 9
IC39 E - 10
IC40 F - 1
IC41 F - 2
IC42 F - 3
IC43 F - 4
IC44 F - 5
IC45 F - 8
IC46 E - 6
IC47 F - 9
IC48 F - 10
IC49 G - 10
IC50 F - 11
IC51 G - 1
IC52 G - 4
IC53 G - 2
IC55 G - 2
IC56 G - 6
IC57 G - 7
IC58 G - 10
IC59 G - 11
IC61 B - 5

LV1 A - 10

Q1 A - 10
Q2 A - 9
Q3 A - 8
Q4 G - 3
Q5 G - 4
Q6 G - 5
Q7 G - 2
Q8 G - 6
Q9 G - 5
Q10 G - 5

RV1 A - 6
RV2 A - 8
RV3 A - 7
RV4 B - 8
RV5 E - 11
RV6 G - 5
RV7 A - 11
RV8 G - 5
RV9 B - 6
RV10 G - 11

TP1 B - 6
TP2 A - 5
TP3 G - 4
TP4 F - 3
TP5 D - 5
TP7 E - 1
TP8 B - 5
TP9 E - 1
TP10 D - 1
TP11 E - 8
TP12 G - 10
TP13 G - 10
TP14 G - 10
TP15 D - 5
TP16 B - 6
TP17 A - 5
TP18 B - 8

NEW
NTSC; # 20501 –
PS ; # 20401 –

CAPSTAN-A BOARD

Capstan Servo

NEW
NTSC; # 20501 –
PS ; # 20401 –

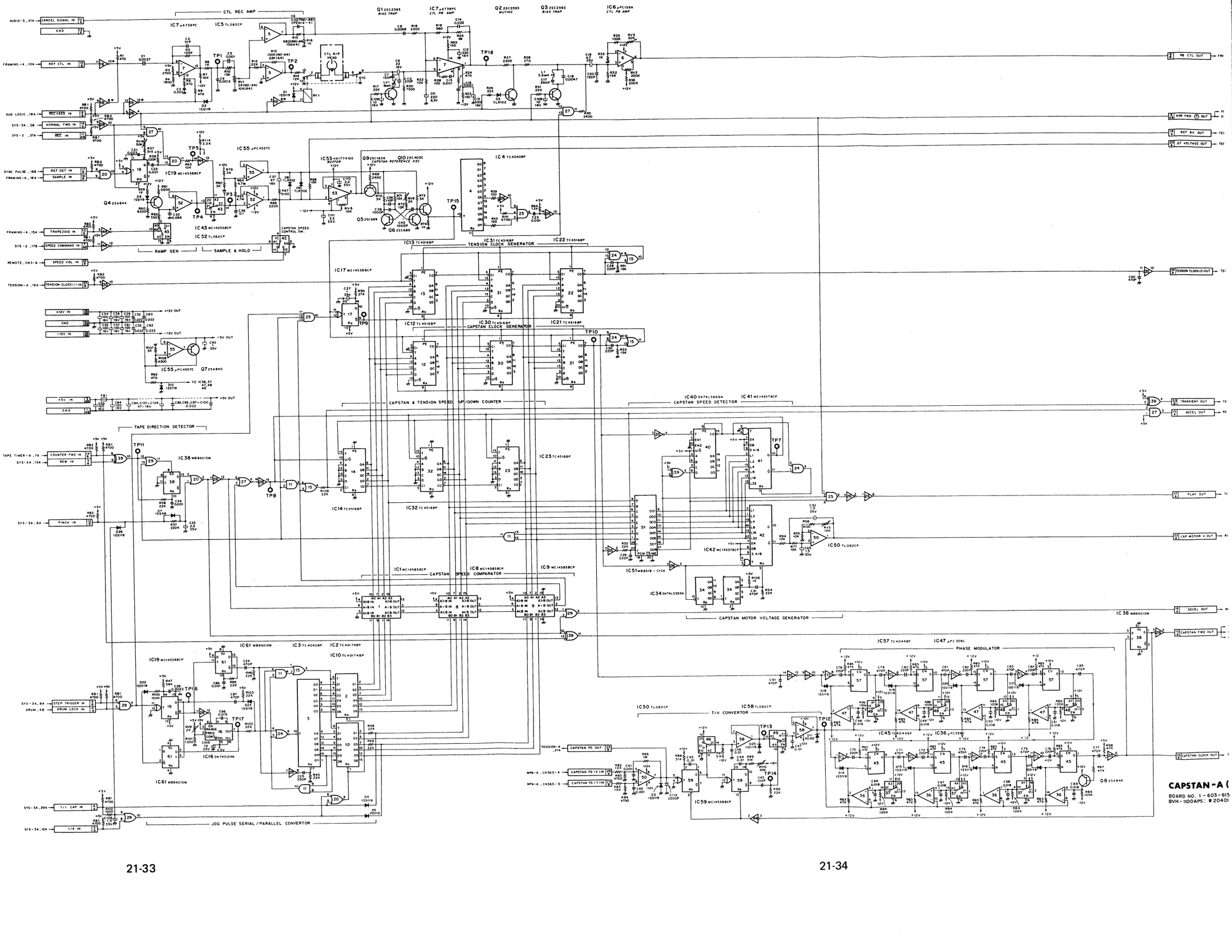

CAPSTAN-A

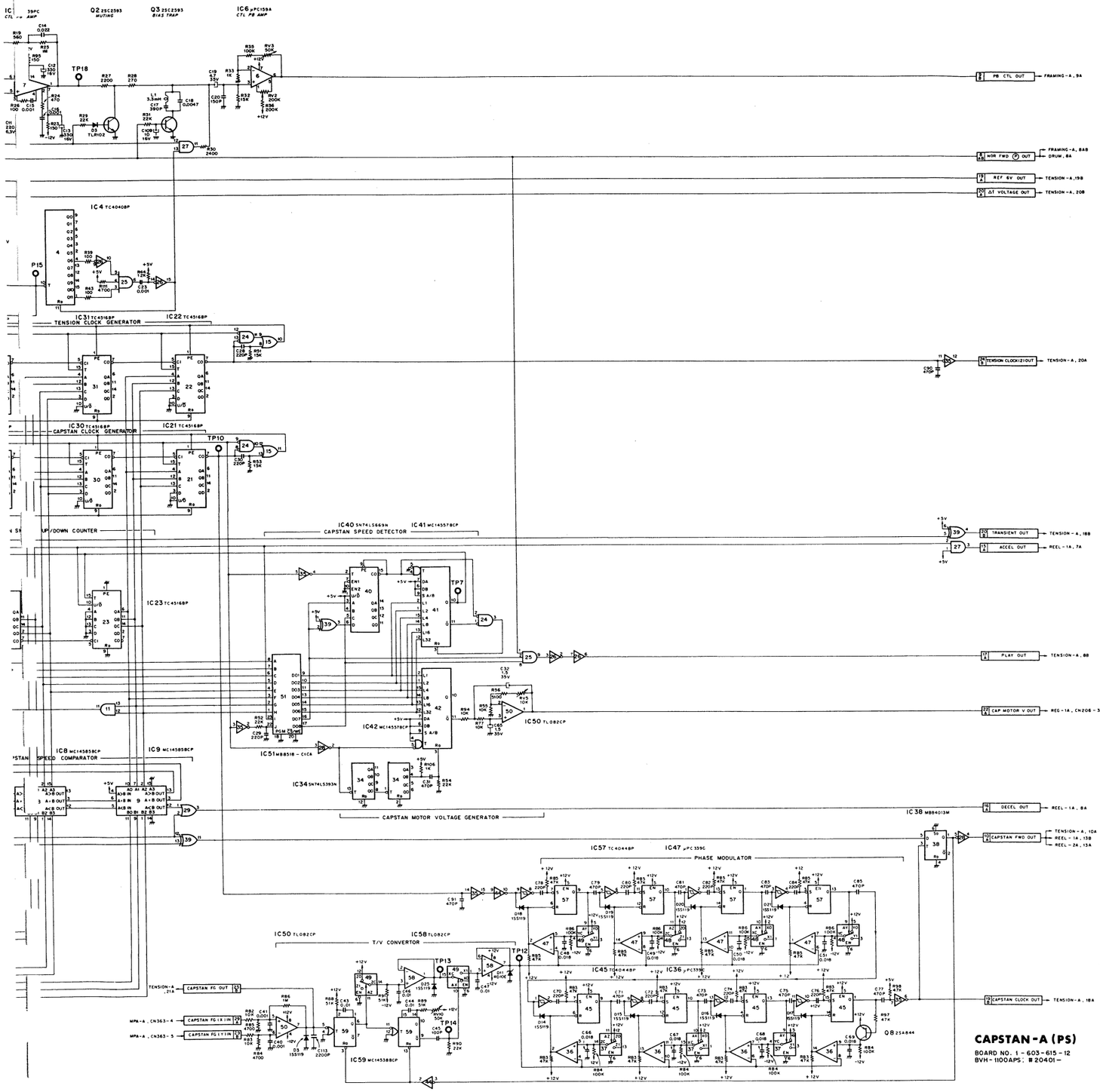

CAPSTAN-A (PS)

BOARD NO. 1-603-615-12
BVH-1100APS: #20401-

REF. NO.	TYPE	+12V	−12V	+5V	GND
IC1	MC14585BCP			16	8
2	TC40174BP (MC14174BCP)			16	8
3	TC4040BP (CD4040BE)			16	8
4	TC4040BP (CD4040BE)			16	8
5	TL082CP	8	4		
6	μPC159A	7	4		
7	μA739PC	14	7		
8	MC14585BCP			16	8
9	MC14585BCP			16	8
10	TC40174BP (MC14174BCP)			16	8
11	TC4081BP (CD4081BE)			14	7
12	TC4516BP (MC14516BCP)			16	8
13	TC4516BP (MC14516BCP)			16	8
14	TC4516BP (MC14516BCP)			16	8
15	TC4071BP (CD4071BE)			14	7
16	SN74S124N			15, 16	8, 9
17	HD14538BP (MC14538BCP)			16	8
18	M53206P (SN7406N)			14	7
19	HD14538BP (MC14538BCP)			16	8
20	TC4001BP (CD4001BE)			14	7
21	TC4516BP (MC14516BCP)			16	8
22	TC4516BP (MC14516BCP)			16	8
23	TC4516BP (MC14516BCP)			16	8
24	TC4001BP (CD4001BE)			14	7
25	TC4073BP (CD4073BE)			14	7
26	TC4049BP (CD4049BE)			16	8
27	TC4081BP (CD4081BE)			14	7
28	TC4049BP (CD4049BE)			16	8
29	TC4071BP (CD4071BE)			14	7
30	TC4516BP (MC14516BCP)			16	8
31	TC4516BP (MC14516BCP)			16	8
32	TC4516BP (MC14516BCP)			16	8
34	SN74LS393N			14	7
35	TC4049BP (CD4049BE)			16	8
36	μPC339C			3	12
37	μPD4053BC (CD4053BE)			16	8
38	MB84013M (CD4013BE)			14	7
39	MC14070BCP			14	7
40	SN74LS669N			16	8
41	MC14557BCP			16	8
42	MC14557BCP			16	8
43	μPD4053BC (CD4053BE)			16	8
44	TC9020BP			16	8
45	TC4044BP (CD4044BE)			16	8
46	MC14584BCP			14	7
47	μPC339C			3	12
48	μPD4053BC (CD4053BE)			16	8
49	μPD4053BC (CD4053BE)			16	8
50	TL082CP	8	4		
51	MB8518H-C1CA			24	12
52	TL082CP	8	4		
53	HA17741QS	7	4		
55	μPC4557C	8	4		
56	MC14584BCP			14	7
57	TC4044BP (CD4044BE)			16	8
58	TL082CP	8	4		
59	HD14538BP (MC14538BCP)			16	8
61	MB84013M (CD4013BE)			14	7

NEW
NTSC; #20501-
PS ; #20401-

IC 51
MB8518-C1CA
PROGRAMMED DATA

WORD (ADDRESS)	DATA OUTPUTS (IN HEXADECIMAL)
0- 15	74. 74. 74. 74. 74. 71. 6D. 69. E1. DF. E0. 20. 1F. 1E. 1D. 1C. 1B.
16- 31	1A. 19. 19. 19. 18. 18. 18. 17. 17. 17. 16. 16. 16. 15. 15. 15.
32- 47	95. 95. 95. 95. 95. 95. 95. 95. 95. 95. 95. 95. 95. 95. 95. 95.
48- 63	95. 95. 95. 95. 95. 95. 95. 95. 95. 95. 95. 95. 95. 95. 95. 95.
64- 79	94. 94. 94. 94. 94. 94. 94. 94. 94. 94. 94. 94. 94. 94. 94. 94.
80- 95	94. 94. 94. 94. 94. 94. 94. 94. 94. 94. 94. 94. 94. 94. 94. 94.
96- 111	93. 93. 93. 93. 93. 93. 93. 93. 93. 93. 93. 93. 93. 93. 93. 93.
112- 127	93. 93. 93. 93. 93. 93. 93. 93. 93. 93. 93. 93. 93. 93. 93. 93.
128- 143	93. 93. 93. 93. 93. 93. 93. 93. 93. 93. 93. 93. 93. 93. 93. 93.
144- 159	93. 93. 93. 93. 93. 93. 93. 93. 93. 93. 93. 93. 93. 93. 93. 93.
160- 175	93. 93. 93. 93. 93. 93. 93. 93. 93. 93. 93. 93. 93. 93. 93. 93.
176- 191	93. 93. 93. 93. 93. 93. 93. 93. 93. 93. 93. 93. 93. 93. 93. 93.
192- 207	93. 93. 93. 93. 93. 93. 93. 93. 93. 93. 93. 93. 93. 93. 93. 93.
208- 223	93. 93. 93. 93. 93. 93. 93. 93. 93. 93. 93. 93. 93. 93. 93. 93.
224- 239	93. 93. 93. 93. 93. 93. 93. 93. 93. 93. 93. 93. 93. 93. 93. 93.
240- 255	93. 93. 93. 93. 93. 93. 93. 93. 93. 93. 93. 93. 93. 93. 93. 93.
256- 271	74. 74. 74. 74. 74. 71. 6D. 69. E1. DF. E0. 20. 1F. 1E. 1D. 1C. 1B.
272- 287	1A. 19. 19. 19. 18. 18. 18. 17. 17. 17. 16. 16. 16. 15. 15. 15.
288- 303	95. 95. 95. 95. 95. 95. 95. 95. 95. 95. 95. 95. 95. 95. 95. 95.
304- 319	95. 95. 95. 95. 95. 95. 95. 95. 95. 95. 95. 95. 95. 95. 95. 95.
320- 335	94. 94. 94. 94. 94. 94. 94. 94. 94. 94. 94. 94. 94. 94. 94. 94.
336- 351	94. 94. 94. 94. 94. 94. 94. 94. 94. 94. 94. 94. 94. 94. 94. 94.
352- 367	93. 93. 93. 93. 93. 93. 93. 93. 93. 93. 93. 93. 93. 93. 93. 93.
368- 383	93. 93. 93. 93. 93. 93. 93. 93. 93. 93. 93. 93. 93. 93. 93. 93.
384- 399	93. 93. 93. 93. 93. 93. 93. 93. 93. 93. 93. 93. 93. 93. 93. 93.
400- 415	93. 93. 93. 93. 93. 93. 93. 93. 93. 93. 93. 93. 93. 93. 93. 93.
416- 431	93. 93. 93. 93. 93. 93. 93. 93. 93. 93. 93. 93. 93. 93. 93. 93.
432- 447	93. 93. 93. 93. 93. 93. 93. 93. 93. 93. 93. 93. 93. 93. 93. 93.
448- 463	93. 93. 93. 93. 93. 93. 93. 93. 93. 93. 93. 93. 93. 93. 93. 93.
464- 479	93. 93. 93. 93. 93. 93. 93. 93. 93. 93. 93. 93. 93. 93. 93. 93.
480- 495	93. 93. 93. 93. 93. 93. 93. 93. 93. 93. 93. 93. 93. 93. 93. 93.
496- 511	93. 93. 93. 93. 93. 93. 93. 93. 93. 93. 93. 93. 93. 93. 93. 93.
512- 527	7F. 7F. 7F. 7F. 7F. 7F. 7F. 78. 6B. E8. D9. D1. 15. 15. 10. 10. 0A. 0A.
528- 543	0A. 08. 07. 06. 05. 05. 05. 05. 05. 06. 04. 04. 04. 04. 04. 04.
544- 559	83. 83. 83. 83. 83. 83. 83. 83. 83. 83. 83. 83. 83. 83. 83. 83.
560- 575	83. 83. 83. 83. 83. 83. 83. 83. 83. 83. 83. 83. 83. 83. 83. 83.
576- 591	80. 80. 80. 80. 80. 80. 80. 80. 80. 80. 80. 80. 80. 80. 80. 80.
592- 607	80. 80. 80. 80. 80. 80. 80. 80. 80. 80. 80. 80. 80. 80. 80. 80.
608- 623	80. 80. 80. 80. 80. 80. 80. 80. 80. 80. 80. 80. 80. 80. 80. 80.
624- 639	80. 80. 80. 80. 80. 80. 80. 80. 80. 80. 80. 80. 80. 80. 80. 80.
640- 655	80. 80. 80. 80. 80. 80. 80. 80. 80. 80. 80. 80. 80. 80. 80. 80.
656- 671	80. 80. 80. 80. 80. 80. 80. 80. 80. 80. 80. 80. 80. 80. 80. 80.
672- 687	80. 80. 80. 80. 80. 80. 80. 80. 80. 80. 80. 80. 80. 80. 80. 80.
688- 703	80. 80. 80. 80. 80. 80. 80. 80. 80. 80. 80. 80. 80. 80. 80. 80.
704- 719	80. 80. 80. 80. 80. 80. 80. 80. 80. 80. 80. 80. 80. 80. 80. 80.
720- 735	80. 80. 80. 80. 80. 80. 80. 80. 80. 80. 80. 80. 80. 80. 80. 80.
736- 751	80. 80. 80. 80. 80. 80. 80. 80. 80. 80. 80. 80. 80. 80. 80. 80.
752- 767	80. 80. 80. 80. 80. 80. 80. 80. 80. 80. 80. 80. 80. 80. 80. 80.
768- 783	7F. 7F. 7F. 7F. 7F. 7D. 69. 5E. DE. D9. D1. 10. 10. 0A. 0A. 07. 07.
784- 799	07. 05. 05. 05. 05. 03. 03. 03. 02. 02. 02. 02. 02. 02. 02. 02.
800- 815	81. 81. 81. 81. 81. 81. 81. 81. 81. 81. 81. 81. 81. 81. 81. 81.
816- 831	81. 81. 81. 81. 81. 81. 81. 81. 81. 81. 81. 81. 81. 81. 81. 81.
832- 847	80. 80. 80. 80. 80. 80. 80. 80. 80. 80. 80. 80. 80. 80. 80. 80.
848- 863	80. 80. 80. 80. 80. 80. 80. 80. 80. 80. 80. 80. 80. 80. 80. 80.
864- 879	80. 80. 80. 80. 80. 80. 80. 80. 80. 80. 80. 80. 80. 80. 80. 80.
880- 895	80. 80. 80. 80. 80. 80. 80. 80. 80. 80. 80. 80. 80. 80. 80. 80.
896- 911	80. 80. 80. 80. 80. 80. 80. 80. 80. 80. 80. 80. 80. 80. 80. 80.
912- 927	80. 80. 80. 80. 80. 80. 80. 80. 80. 80. 80. 80. 80. 80. 80. 80.
928- 943	80. 80. 80. 80. 80. 80. 80. 80. 80. 80. 80. 80. 80. 80. 80. 80.
944- 959	80. 80. 80. 80. 80. 80. 80. 80. 80. 80. 80. 80. 80. 80. 80. 80.
960- 975	80. 80. 80. 80. 80. 80. 80. 80. 80. 80. 80. 80. 80. 80. 80. 80.
976- 991	80. 80. 80. 80. 80. 80. 80. 80. 80. 80. 80. 80. 80. 80. 80. 80.
992- 1007	80. 80. 80. 80. 80. 80. 80. 80. 80. 80. 80. 80. 80. 80. 80. 80.
1008- 1023	80. 80. 80. 80. 80. 80. 80. 80. 80. 80. 80. 80. 80. 80. 80. 80.

DEMOD DEMOD

DEMOD BOARD – *COMPONENT SIDE* –

FORMER
20001 – 20099

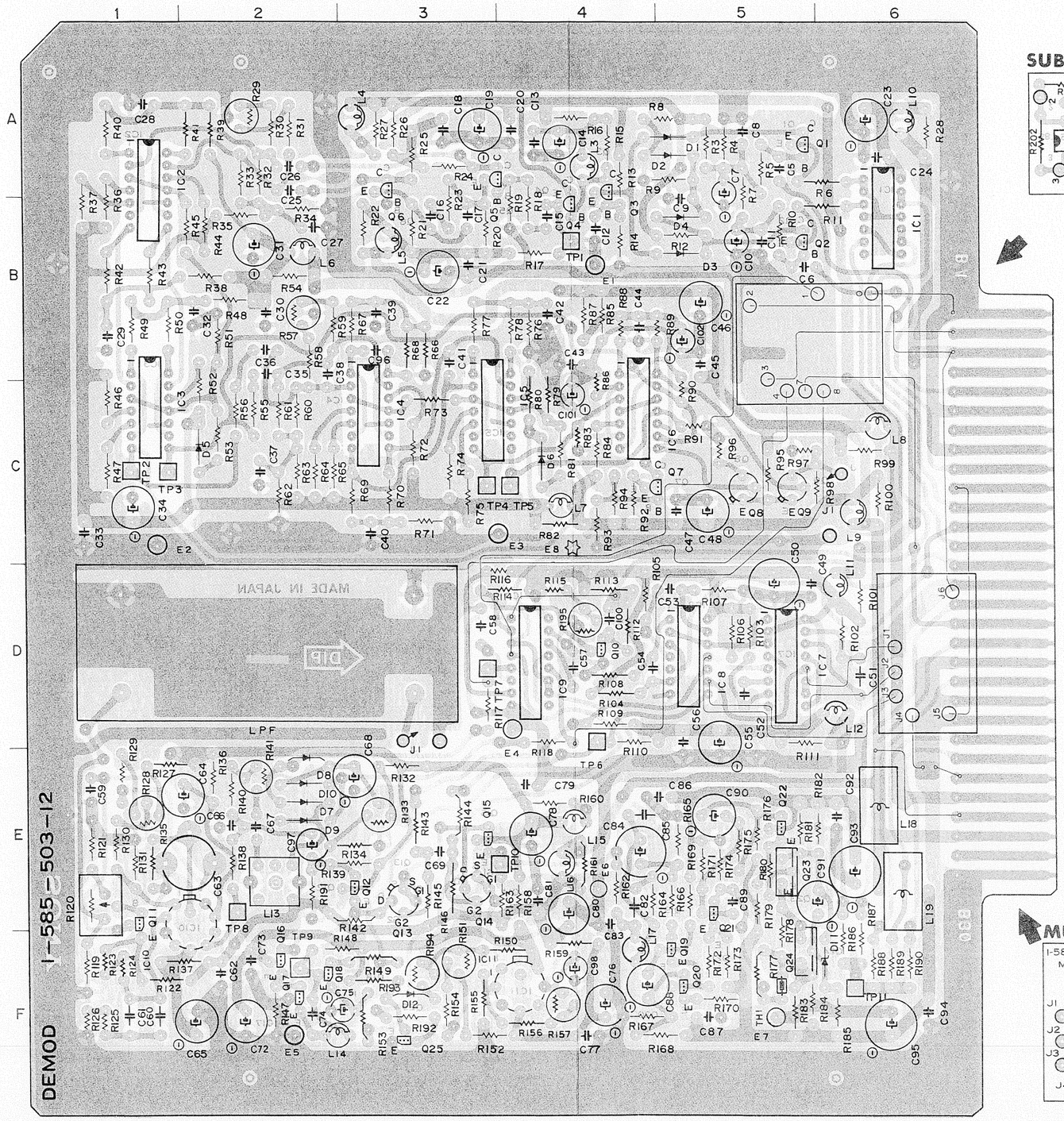

21-35 (3/7)

SUB-DM (ONLY PS)

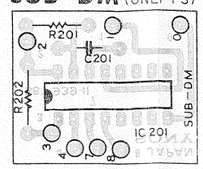

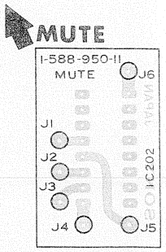

21-35 (4/7)

FORMER
20001 – 20099

C63	2 - E
D1	5 - A
D2	5 - A
D3	5 - B
D4	5 - B
D5	2 - C
D6	4 - C
D7	2 - E
D8	2 - E
D9	2 - E
D10	2 - E
D11	5 - F
D12	3 - F
E1	4 - B
E2	1 - C
E3	4 - C
E4	4 - D
E5	2 - F
E6	4 - E
E7	5 - F
E8	4 - C
IC1	6 - A
IC2	1 - A
IC3	1 - C
IC4	3 - C
IC5	4 - C
IC6	4 - C
IC7	5 - D
IC8	5 - D
IC9	4 - D
IC10	1 - E
IC11	4 - F
L13	2 - E
Q1	5 - A
Q2	5 - B
Q3	4 - A
Q4	4 - A
Q5	3 - A
Q6	3 - A
Q7	4 - C
Q8	5 - C
Q9	5 - C
Q10	4 - D
Q11	1 - E
Q12	3 - E
Q13	3 - E
Q14	3 - E
Q15	3 - E
Q16	2 - F
Q17	2 - F
Q18	2 - F
Q19	5 - F
Q20	5 - F
Q21	5 - F
Q22	5 - E
Q23	5 - E
Q24	5 - F
Q25	3 - F
R29	2 - A
R57	2 - B
R120	1 - E
R128	1 - E
R133	3 - E
R141	2 - E
R151	3 - F
R157	4 - F
R194	3 - F
R195	4 - D
TP1	4 - B
TP2	1 - C
TP3	1 - C
TP4	4 - C
TP5	4 - C
TP6	4 - D
TP7	3 - D
TP8	2 - E
TP9	2 - F
TP10	3 - E
TP11	6 - F

DEMOD	DEMOD

DEMOD BOARD

Demodulator
Video Output Amplifier

FORMER
20001 – 20099

Q1 2SC2009 Q2 2SC2009 Q3 2SC2009 — EE/PB RF SWITCHER
Q4 2SC2009 — RF BUFFER
Q5 2SC2009 Q6 2SC2009 — RF DIFFERENTIAL AMP
IC2 CA3054 — LIMITER
IC3 CA3054 — LIMITER
IC4 CA3054 — DELAY (LIMITER)
IC5 CA3054 — DELAY (LIMITER)

+12V
L4 22μH
R27 180
C19 47 16V
C20 0.022
R8 5600
R12 5600
R13 4300
R16 750
R15 750
C13 0.022
C14 33 10V
L3 470μH
R29 10K
R31 47K
R30 47K
R26 680
C26 0.001
C25 0.001
R33 3600
R32 3600
R34 3300
R35 2200
C27 0.022
R22 180
-12V
L5 22μH
C22 47 16V
C21 0.022
R24 330
R25 330
C18 0.022
R19 3300
R18 100
C15 0.022
C16 0.022
R23 150
C17 62P
R21 2700
R20 2700
R17 4700
D1 1S1555
D2 1S1555
D4 1S1555
D3 1S1555
R3 1K
C9 0.001
R9 8200
C5 0.022
R5 75
R7 120
C6 0.022
R10 75
C7 1 35V
C10 1 35V
C11 0.022
R11 560
R4 220
C8 0.022
R6 560
R14 5600
C12 0.001
TP-1
E-1

MOD, 9 → EE RF IN (X) 9 AB
MOD, 8 → EE RF IN (G) 8 AB
RF EQ-2,5 → PB EQ RF IN (X) 5 AB
RF EQ-2,6 → PB EQ RF IN (G) 6 AB
VID LOGIC, 4A → OFF TAPE 11 AB
H: REC OR EE
VID LOGIC ,22B → NORMAL FWD(PB) IN 13 AB

IC1 SN7400N
EE/NORMAL FWD CONTROL GATE
R28 180
C23 47 16V
L10 22μH
+5V
C24 0.022
REG-3 → REG +5V IN 3 AB → +5V

GND 1 AB
GND 19 AB
GND 30 AB
GND
SYNC PULSE, 7A → SECAM · BW/PAL 2 AB

L11 22μH
+5V
R101 180
C49 0.022
C50 100 16V

IC9 SN74LS221N
R114 680
C57 180P
R115 27K
R195 10K
C58 160P
R116 30K
TP-7
SYNC PULSE, 7B → PB SYNC 2 IN 14 AB
R195: DELAY TIME

IC8 SN7406N
R104 220
R105 220
R106 220
C53 0.001
R107 430
C54 0.001
R108 430
TRIGGER PULSE GENERATOR
VID LOGIC, 21A → RF SW PULSE-1 IN 12 AB
RF EQ-2,8 → D0 PULSE-3 IN 10 AB

IC7 SN74LS221N
DELAY M.M.V
R102 10K
PULSE WIDTH M.M.V (2μs)
C52 180P
R103 24K

IC201
+5V
C201 160P
R201 33K
R202 560Ω
R117 2200
C104 2P
R118 2200
C105 5P
SUB-DM BOARD

IC202 SN74265N
MUTE BOARD
L12 22μH
+12V
R111 180
C55 47 16V
R109 330
R110 680
R196 680
C56 0.022
TP-6

Q11 2SC403C — BUFFER
IC10 NE592K — VIDEO AMP
Q12 2SC403C — BUFFER
Q16 2SC403C — BUFFER
Q17 2SA844 — SC TRAP
Q18 2SC403C — SAMPLE & HOLD
Q25 2SC403C — EE/PB MODE SW
IC11 TA7504M — DC AMP
Q13 2SK43-2 Q14 2SK43- — SW NOISE SUPPRESSOR

R120 100
R119 620
R121 100
R123 1K
R124 3900
R122 5300
C59 0.022
R127 22K
D13 1S1555
D14 1S1555
C60 100P
R128 5K
R125 1500
R126 500
R129 15K
C103 47 6.3V
R131 10K
C65 47 16V
C63 50P
R135 390
R136 270
C64 47 16V
R130 10K
R138 1K
R137 270
TP-8
C97 100 10V
R140 (390 470 560)
R141 100
R139 33K
R191 15K
R142 1500
C62 0.022
C67 43P
E-4
E-5
R120: VIDEO LEVEL ADJ
R128: OFF-SET ADJ
C63: FREQ RESP ADJ
R141: BURST LEVEL ADJ
L13: BURST PHASE ADJ
L13 22μH
D7 1S1925P
D8 1S1925P
D9 1S1925P
D10 1S1925P
C68 47 16V
R133 500
R134 390
R133: SW BALANCE ADJ
R132 2200
R158 22
C74 56P
R148 3300
L14 22μH
R149 33K
R147 3300
TP-9
C75 0.1 35V
R193 22K
R192 15K
D12 1S1555
R194 20K
R150 10K
R151 5K
R152 10K
C72 47 16V
C73 0.022
R153 220K
R154 220K
R155 22K
R156 27K
R157 5K
C77 0.022
C76 47 16V
R159 22
R194: DC LEVEL ADJ
R151: DC AMP OFF-SET ADJ
R157: DC AMP SENS ADJ
C98 0.22 35V
C69 18P
R145 18K
R146 18K
R143 5100
R144 5100
C80 47 16V
C78 47 16V

R29: LIMITER BALANCE
R57: LIMITER BALANCE
TP-2
TP-3
E-1
E-2
C30 0.022
C31 47/16V
R54 100
L6 22μH
R57 10K
R59 47K
R58 47K
R56 330
C36 0.001
C35 0.001
R55 330
C38 2P
R61 3600
R60 3600
C37 0.022
R62 3300
R63 2200
C96 5P
C40 0.022
R68 330
R66 1300
C39 0.022
R67 330
R69 330
R70 330
R71 1K
R78 330
R76 560
C42 0.022
R77 330
C41 5P
R65 1200
R64 620
R72 620
R73 470
R75 1200
R74 620
R81 1K
R79 3600
R80 240
D6 1S1555
C33 0.022
C34 47 16V

DEMOD

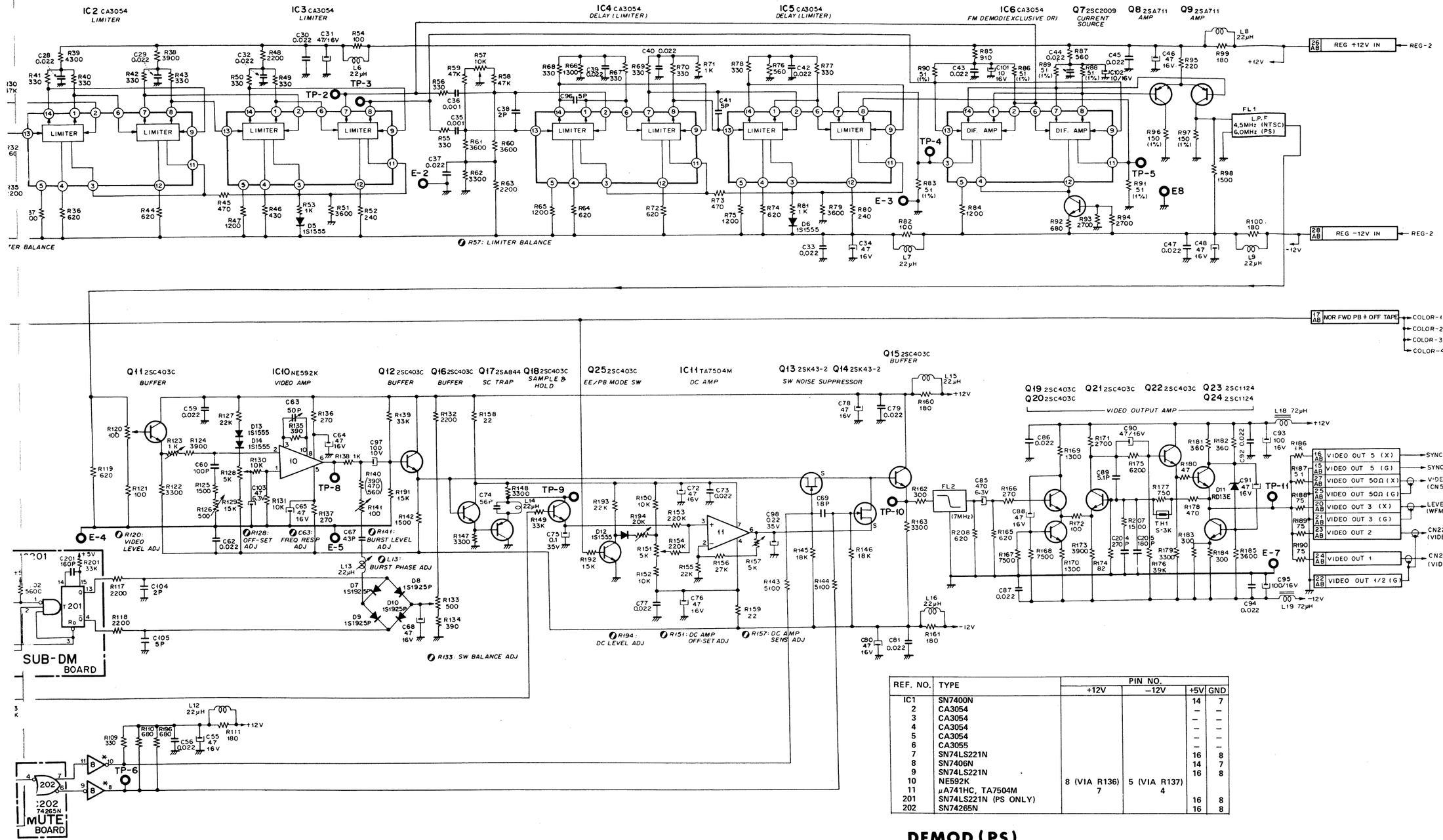

FORMER # 20001 – 20099

REF. NO.	TYPE	PIN NO.			
		+12V	−12V	+5V	GND
IC1	SN7400N			14	7
2	CA3054			–	–
3	CA3054			–	–
4	CA3054			–	–
5	CA3054			–	–
6	CA3055			–	–
7	SN74LS221N			16	8
8	SN7406N			14	7
9	SN74LS221N			16	8
10	NE592K	8 (VIA R136)	5 (VIA R137)		
11	μA741HC, TA7504M	7	4		
201	SN74LS221N (PS ONLY)			16	8
202	SN74265N			16	8

DEMOD (PS)

BOARD NO. 1-585-503-12
BVH-1100APS : # 20001 —

DEMOD BOARD — *COMPONENT SIDE* —

NEW #20101 –

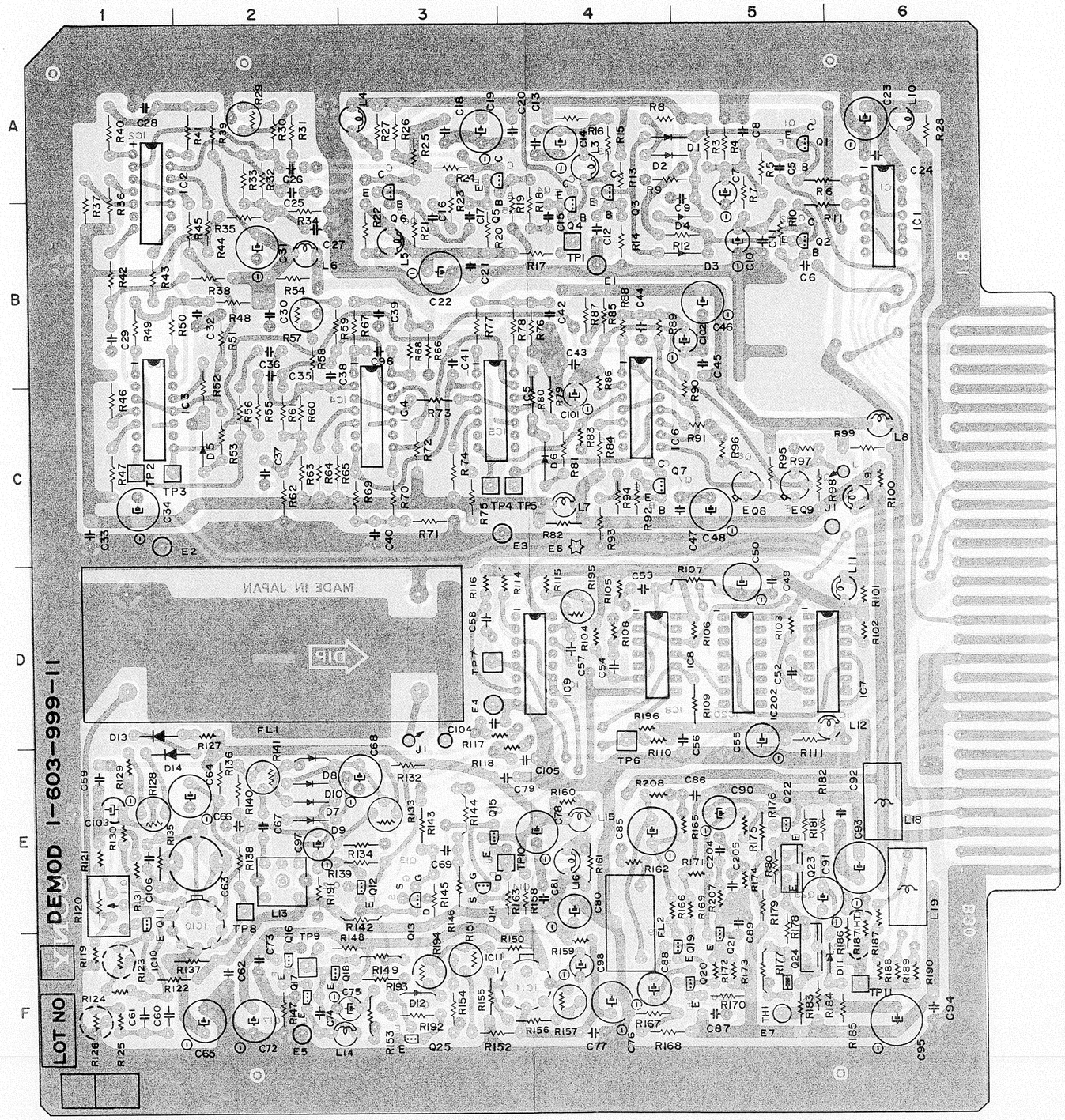

BVH-1100A
BVH-1100APS
BVH-1100APM
DEMOD BOARD
1-603-999-11

NEW #20101 –

C63 2 - E

D1 5 - A
D2 5 - A
D3 5 - B
D4 5 - B
D5 2 - C
D6 4 - C
D7 2 - E
D8 2 - E
D9 2 - E
D10 2 - E
D11 5 - F
D12 3 - F
D13 1 - D
D14 1 - E

E1 4 - B
E2 1 - C
E3 4 - C
E4 3 - D
E5 2 - F
E7 5 - F
E8 4 - C

IC1 6 - A
IC2 1 - A
IC3 1 - C
IC4 3 - C
IC5 4 - C
IC6 4 - C
IC7 6 - D
IC8 5 - D
IC9 4 - D
IC10 1 - F
IC11 3 - F
IC202 5 - D

L13 2 - E

Q1 5 - A
Q2 5 - B
Q3 4 - A
Q4 4 - A
Q5 3 - A
Q6 3 - A
Q7 4 - C
Q8 5 - C
Q9 5 - C
Q11 1 - E
Q12 3 - E
Q13 3 - E
Q14 3 - E
Q15 3 - F
Q16 2 - F
Q17 2 - F
Q18 2 - F
Q19 5 - F
Q20 5 - F
Q21 5 - F
Q22 5 - E
Q23 5 - E
Q24 5 - F
Q25 3 - F

R29 2 - A

R57 2 - B
R120 1 - E
R128 1 - E
R133 3 - E
R141 2 - E
R151 3 - F
R157 4 - F
R194 3 - F
R195 4 - D

TP1 4 - B
TP2 1 - C
TP3 1 - C
TP4 4 - C
TP5 4 - C
TP6 4 - D
TP7 3 - D
TP8 2 - E
TP9 2 - F
TP10 3 - E
TP11 6 - F

DEMOD **DEMOD**

DEMOD BOARD

Demodulator
Video Output Amplifier

NEW #20101 –

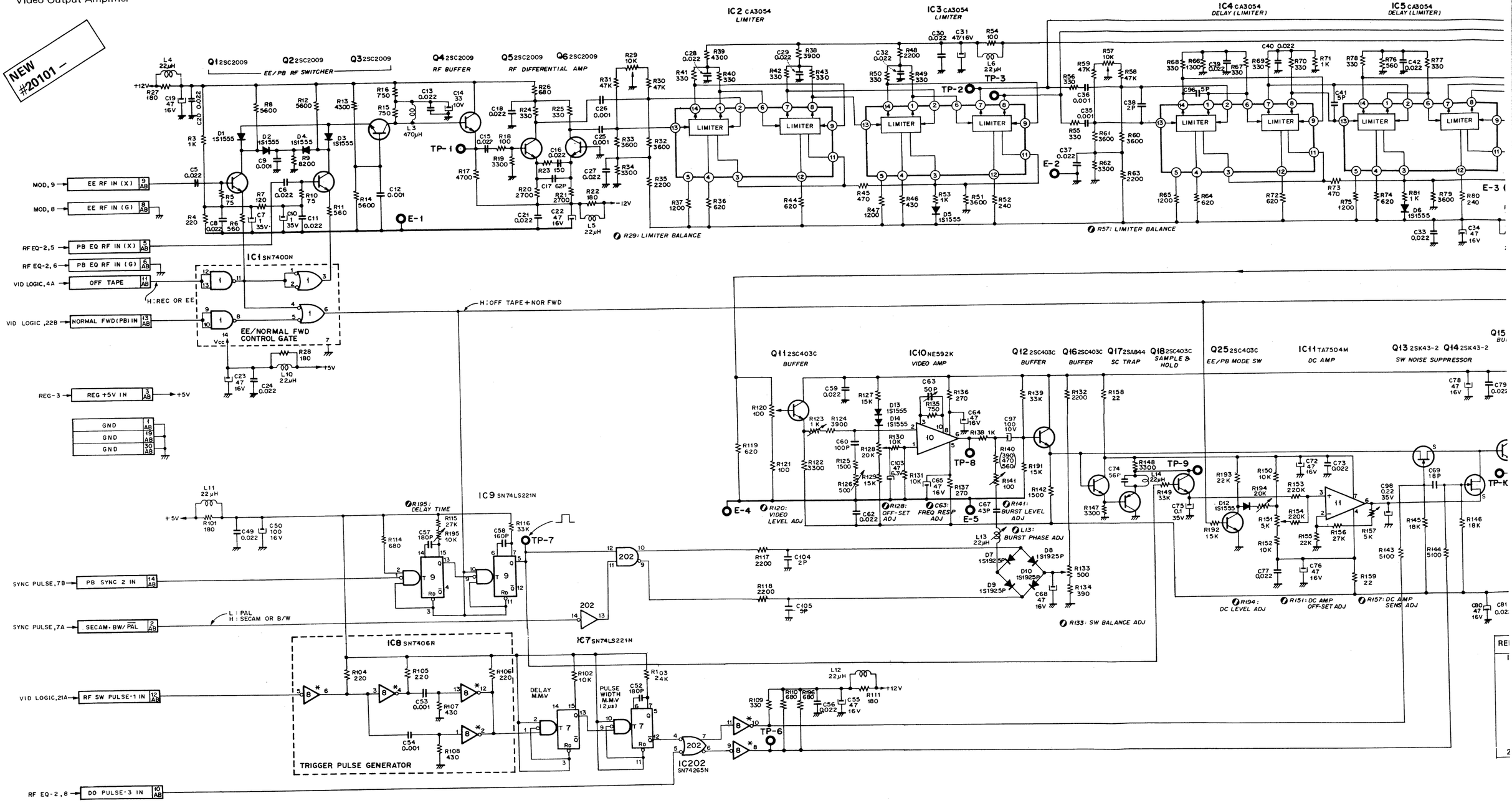

NEW #20101 –

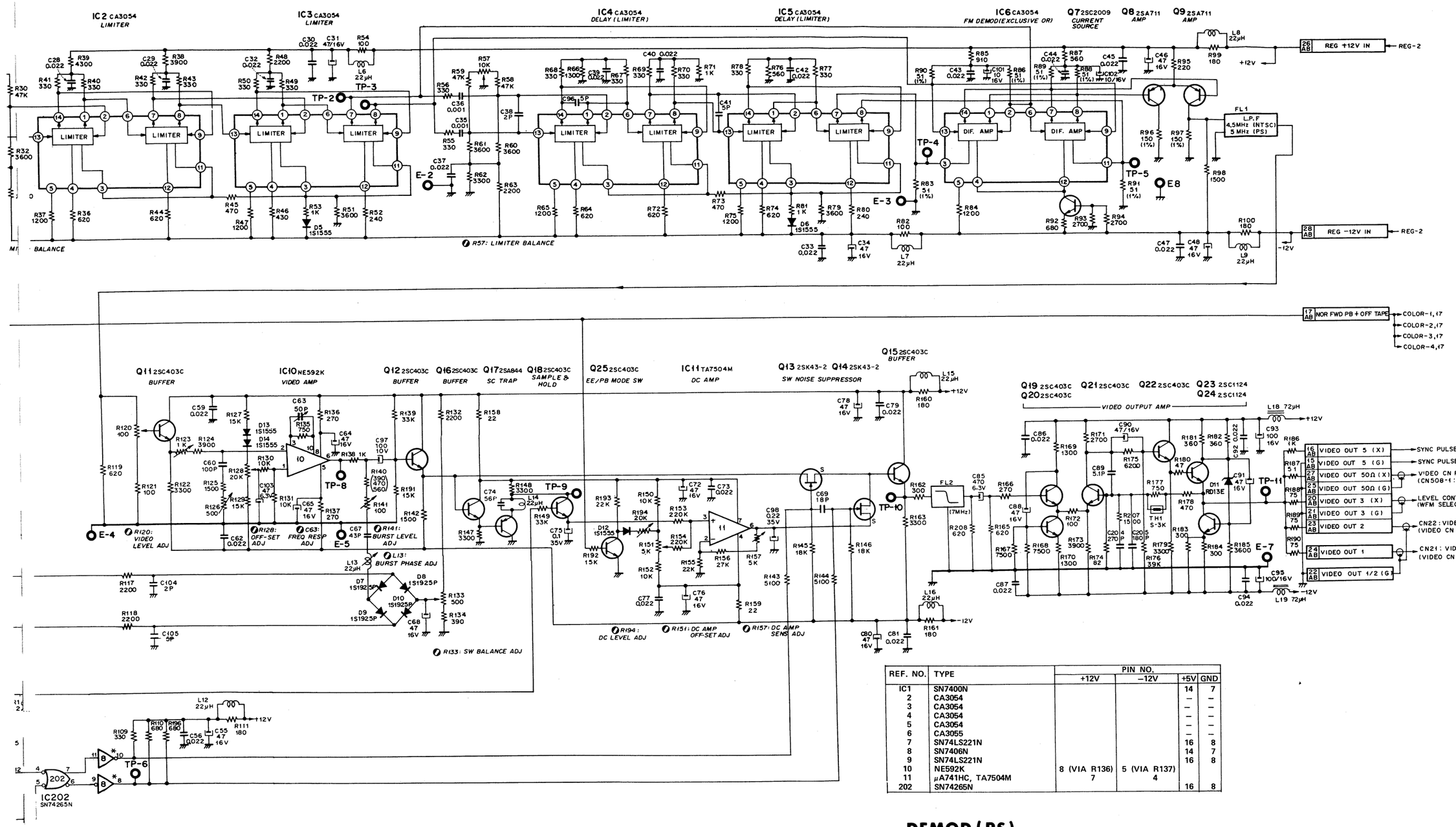

REF. NO.	TYPE	PIN NO. +12V	PIN NO. –12V	PIN NO. +5V	PIN NO. GND
IC1	SN7400N			14	7
2	CA3054			–	–
3	CA3054			–	–
4	CA3054			–	–
5	CA3054			–	–
6	CA3055			–	–
7	SN74LS221N			16	8
8	SN7406N			14	7
9	SN74LS221N			16	8
10	NE592K	8 (VIA R136)	5 (VIA R137)		
11	μA741HC, TA7504M	7	4		
202	SN74265N			16	8

DEMOD (PS)

BOARD NO. : 1-603-999-11
BVH-1100APS : #20101–

DISPLAY BOARD – *COMPONENT SIDE* –

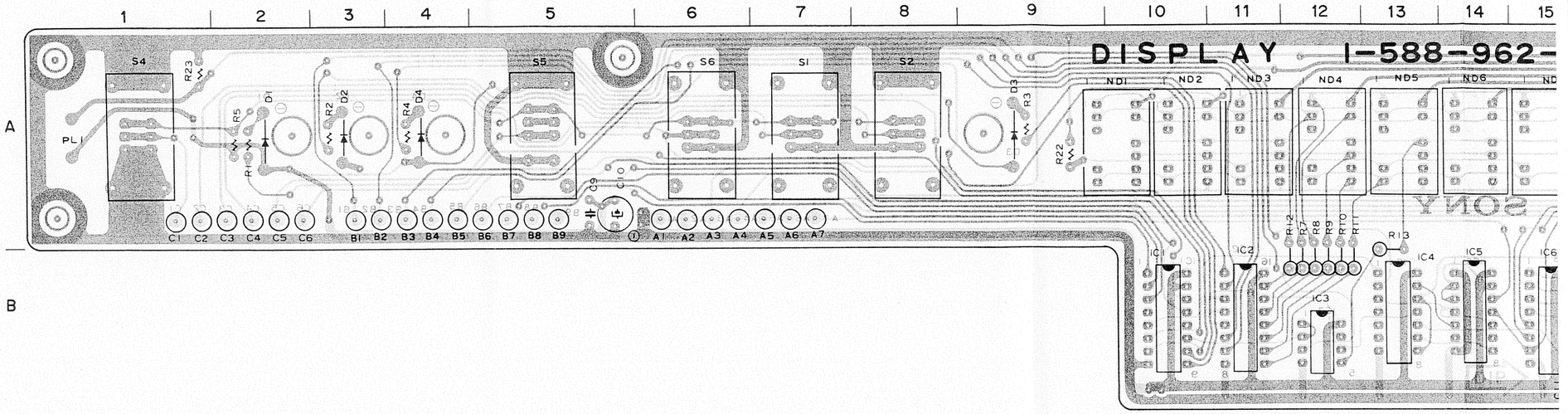

DISPLAY DISPLAY

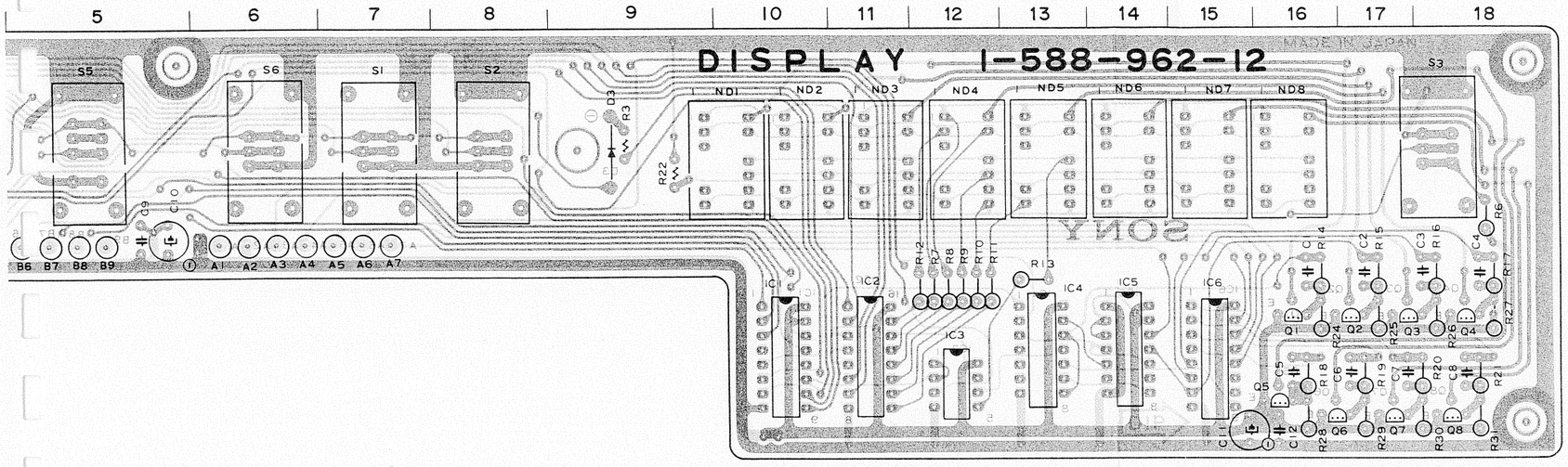

BVH-1100A (NTSC)
BVH-1100APS
BVH-1100APM
DISPLAY BOARD
1-588-962-12

D1	A - 2
D2	A - 3
D3	A - 9
D4	A - 4
IC1	B - 10
IC2	B - 11
IC3	B - 12
IC4	B - 13
IC5	B - 14
IC6	B - 15
Q1	B - 16
Q2	B - 17
Q3	B - 17
Q4	B - 18
Q5	B - 16
Q6	B - 17
Q7	B - 17
Q8	B - 18
S1	A - 7
S2	A - 8
S3	A - 18
S4	A - 1
S5	A - 5
S6	A - 6

DISPLAY BOARD

Tape Timer/Time-code Display

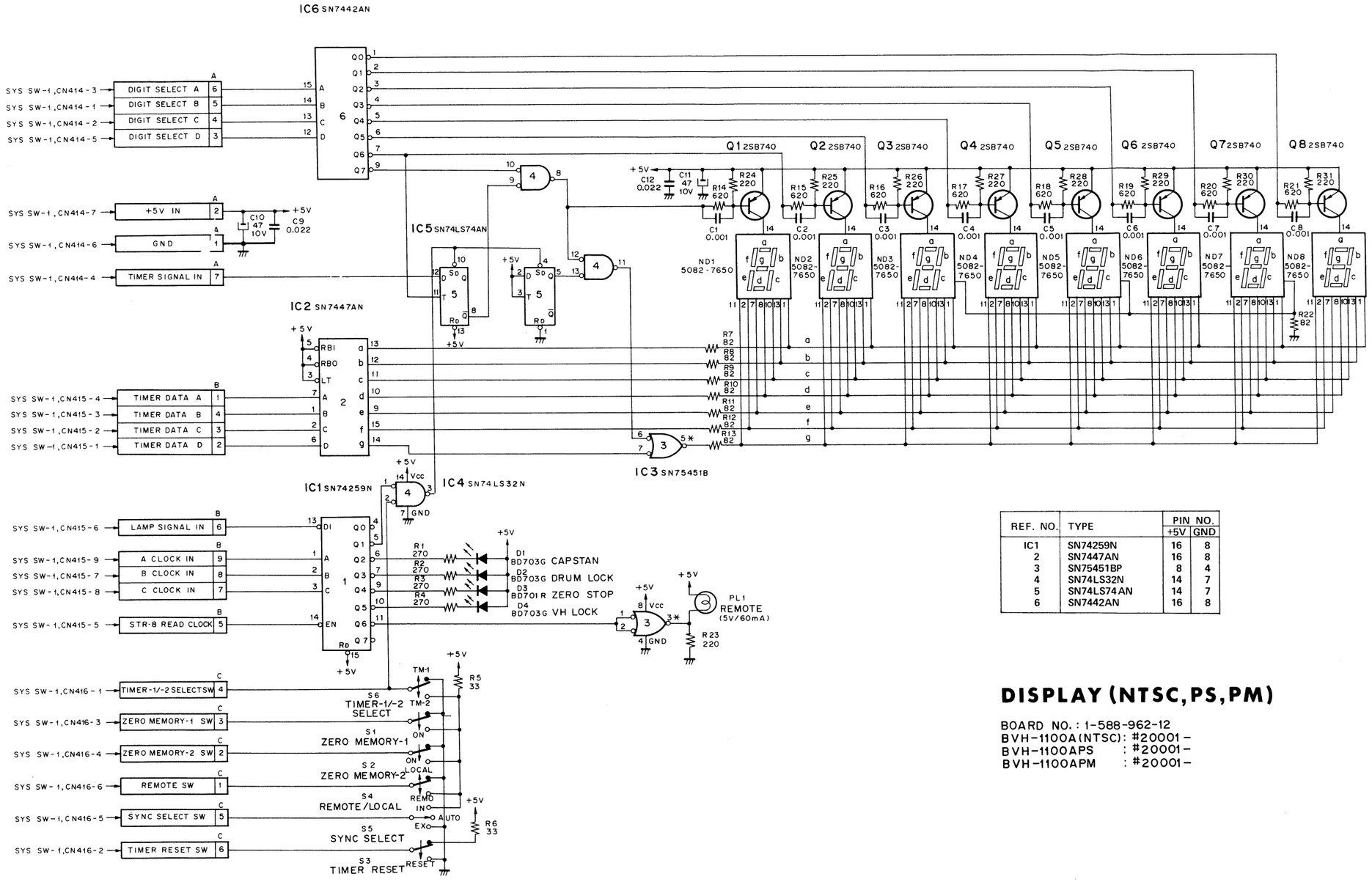

REF. NO.	TYPE	PIN NO.	
		+5V	GND
IC1	SN74259N	16	8
2	SN7447AN	16	8
3	SN75451BP	8	4
4	SN74LS32N	14	7
5	SN74LS74AN	14	7
6	SN7442AN	16	8

DISPLAY (NTSC,PS,PM)

BOARD NO. : 1-588-962-12
BVH-1100A(NTSC): #20001 –
BVH-1100APS : #20001 –
BVH-1100APM : #20001 –

DRUM BOARD — *COMPONENT SIDE* —

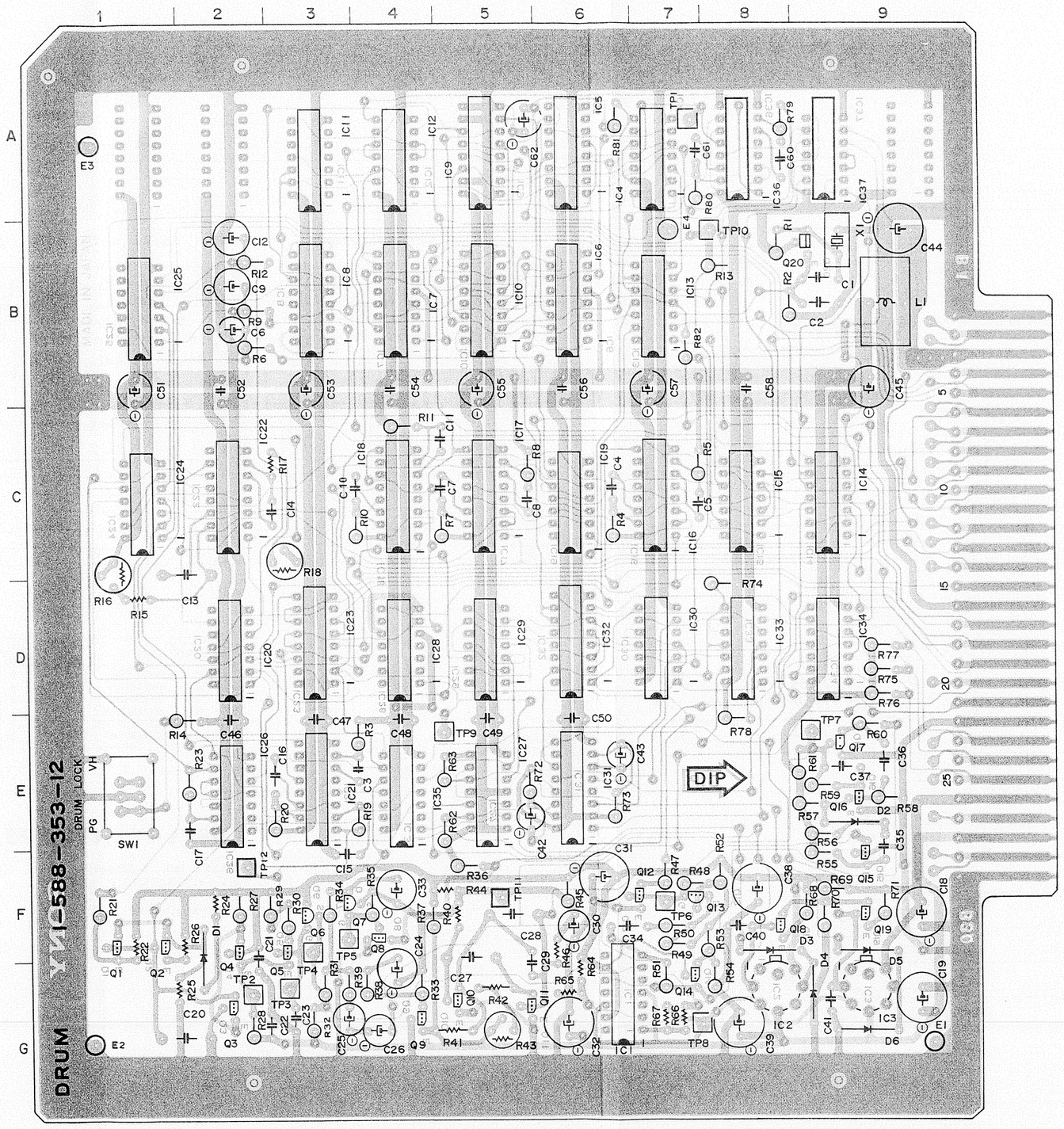

BVH-1100A (NTSC)
BVH-1100APS
BVH-1100APM
DRUM BOARD
1-588-353-12

D1	F - 2
D2	E - 9
D3	F - 8
D4	G - 9
D5	F - 9
D6	G - 9
E1	G - 9
E2	G - 1
E3	A - 1
IC1	G - 6
IC2	G - 8
IC3	G - 9
IC4	A - 7
IC5	A - 6
IC6	B - 6
IC7	B - 4
IC8	B - 3
IC9	A - 5
IC10	B - 5
IC11	A - 3
IC12	A - 4
IC13	B - 7
IC14	C - 9
IC15	C - 8
IC16	C - 7
IC17	C - 5
IC18	C - 4
IC19	C - 6
IC20	D - 2
IC21	E - 3
IC22	C - 2
IC23	D - 3
IC24	C - 1
IC25	B - 1
IC26	E - 2
IC27	E - 5
IC28	D - 4
IC29	D - 5
IC30	D - 9
IC31	E - 6
IC32	D - 6
IC33	D - 8
IC34	D - 9
IC35	E - 4
IC36	A - 8
IC37	A - 9
Q1	F - 1
Q2	F - 1
Q3	G - 2
Q4	F - 2
Q5	F - 3
Q6	F - 3
Q7	F - 3
Q8	F - 4
Q9	G - 4
Q10	G - 5
Q11	G - 5
Q12	F - 7
Q13	F - 7
Q14	G - 7
Q15	F - 9
Q16	F - 9
Q17	F - 9
Q18	F - 8
Q19	F - 9
Q20	B - 9
R16	C - 1
R18	C - 3
R43	G - 5
SW1	E - 1
TP1	A - 7
TP2	G - 2
TP3	G - 3
TP4	F - 3
TP5	F - 3
TP6	F - 7
TP7	E - 9
TP8	G - 7
TP9	E - 5
TP10	B - 8
TP11	F - 5
TP12	F - 2

DRUM BOARD

Drum Servo

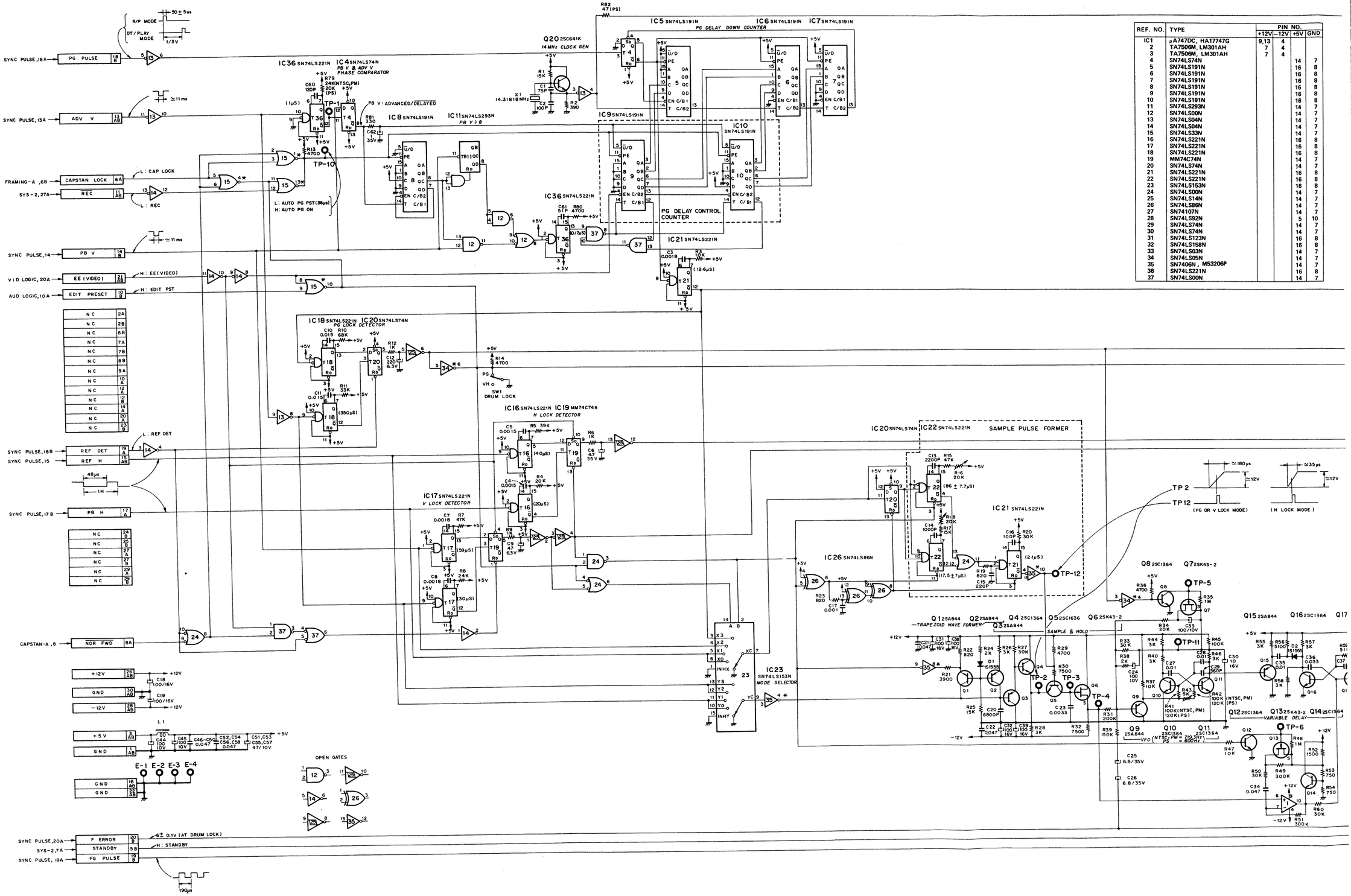

REF. NO.	TYPE	PIN NO. +12V	−12V	+5V	GND
IC1	μA747DC, HA17747G	9,13	4		
2	TA7506M, LM301AH	7	4		
3	TA7506M, LM301AH	7	4		
4	SN74LS74N			14	7
5	SN74LS191N			16	8
6	SN74LS191N			16	8
7	SN74LS191N			16	8
8	SN74LS191N			16	8
9	SN74LS191N			16	8
10	SN74LS191N			16	8
11	SN74LS293N			14	7
12	SN74LS00N			14	7
13	SN74LS04N			14	7
14	SN74LS04N			14	7
15	SN74LS33N			14	7
16	SN74LS221N			16	8
17	SN74LS221N			16	8
18	SN74LS221N			16	8
19	MM74C74N			14	7
20	SN74LS74N			14	7
21	SN74LS221N			16	8
22	SN74LS221N			16	8
23	SN74LS153N			16	8
24	SN74LS00N			14	7
25	SN74LS14N			14	7
26	SN74LS86N			14	7
27	SN74107N			14	7
28	SN74LS92N			5	10
29	SN74LS74N			14	7
30	SN74LS74N			14	7
31	SN74LS123N			16	8
32	SN74LS158N			16	8
33	SN74LS03N			14	7
34	SN74LS05N			14	7
35	SN7406N, M53206P			14	7
36	SN74LS221N			16	8
37	SN74LS00N			14	7

DRUM

REF. NO.	TYPE	PIN NO. +12V	−12V	+5V	GND
IC1	μA747DC, HA17747G	9,13	4		
2	TA7506M, LM301AH	7	4		
3	TA7506M, LM301AH	7	4		
4	SN74LS74N			14	7
5	SN74LS191N			16	8
6	SN74LS191N			16	8
7	SN74LS191N			16	8
8	SN74LS191N			16	8
9	SN74LS191N			16	8
10	SN74LS191N			16	8
11	SN74LS293N			14	7
12	SN74LS00N			14	7
13	SN74LS04N			14	7
14	SN74LS04N			14	7
15	SN74LS33N			14	7
16	SN74LS221N			16	8
17	SN74LS221N			16	8
18	SN74LS221N			16	8
19	MM74C74N			14	7
20	SN74LS74N			14	7
21	SN74LS221N			16	8
22	SN74LS221N			16	8
23	SN74LS153N			16	8
24	SN74LS00N			14	7
25	SN74LS14N			14	7
26	SN74LS86N			14	7
27	SN74107N			14	7
28	SN74LS92N			5	10
29	SN74LS74N			14	7
30	SN74LS74N			14	7
31	SN74LS123N			16	8
32	SN74LS158N			16	8
33	SN74LS03N			14	7
34	SN74LS05N			14	7
35	SN7406N , M53206P			14	7
36	SN74LS221N			16	8
37	SN74LS00N			14	7

DRUM (NTSC, PS, PM)

BOARD NO. : 1-588-353-12
BVH-1100A(NTSC) : #20001-
BVH-1100APS : #20001-
BVH-1100APM : #20001-

DT-1 BOARD – *COMPONENT SIDE* –

FORMER
NTSC; # 20001 – 20499
PS ; # 20001 – 20399

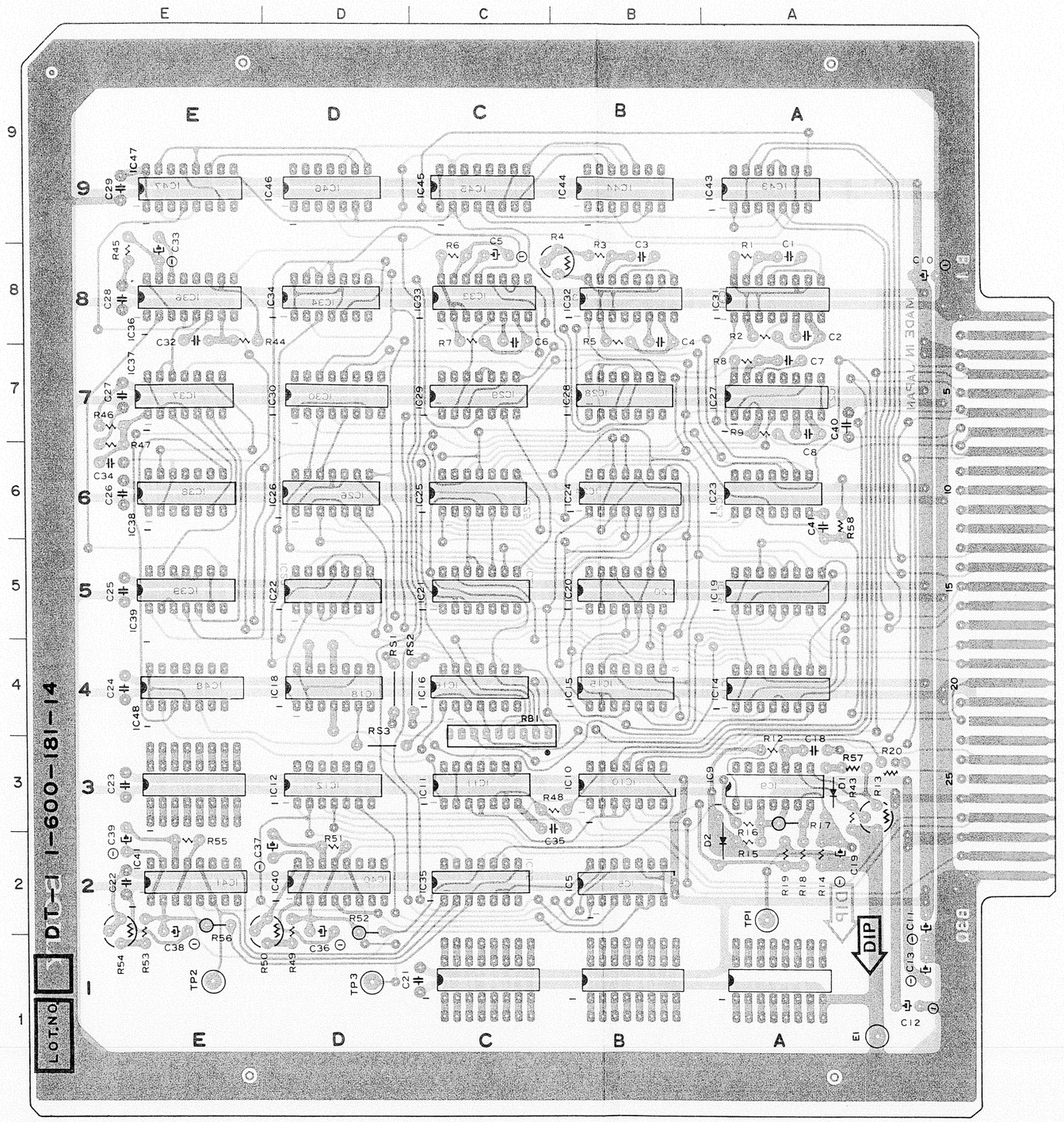

BVH-1100A (NTSC)
BVH-1100APS
BVH-1100APM
DT-1 BOARD
1-600-181-14

D1 A - 3
D2 A - 2

IC5 B - 2
IC9 A - 3
IC10 B - 3
IC11 C - 3
IC12 D - 3
IC14 A - 4
IC15 B - 4
IC16 C - 4
IC18 D - 4
IC19 A - 5
IC20 B - 5
IC21 C - 5
IC22 D - 5
IC23 A - 6
IC24 B - 6
IC25 C - 6
IC26 D - 6
IC27 A - 7
IC28 B - 7
IC29 C - 7
IC30 D - 7
IC31 A - 8
IC32 B - 8
IC33 C - 8
IC34 D - 8
IC35 C - 2
IC36 E - 8
IC37 E - 7
IC38 E - 6
IC39 E - 5
IC40 D - 2
IC41 E - 2
IC43 A - 9
IC44 B - 9
IC45 C - 9
IC46 D - 9
IC47 E - 9
IC48 E - 4

R4 B - 8
R13 A - 3
R50 D - 2
R54 E - 2

TP1 A - 2
TP2 E - 1
TP3 D - 1

TPE1 A - 1

FORMER
NTSC; # 20001 – 20499
PS ; # 20001 – 20399

DT-1 BOARD

FORMER
NTSC; # 20001 – 20499
PS ; # 20001 – 20399

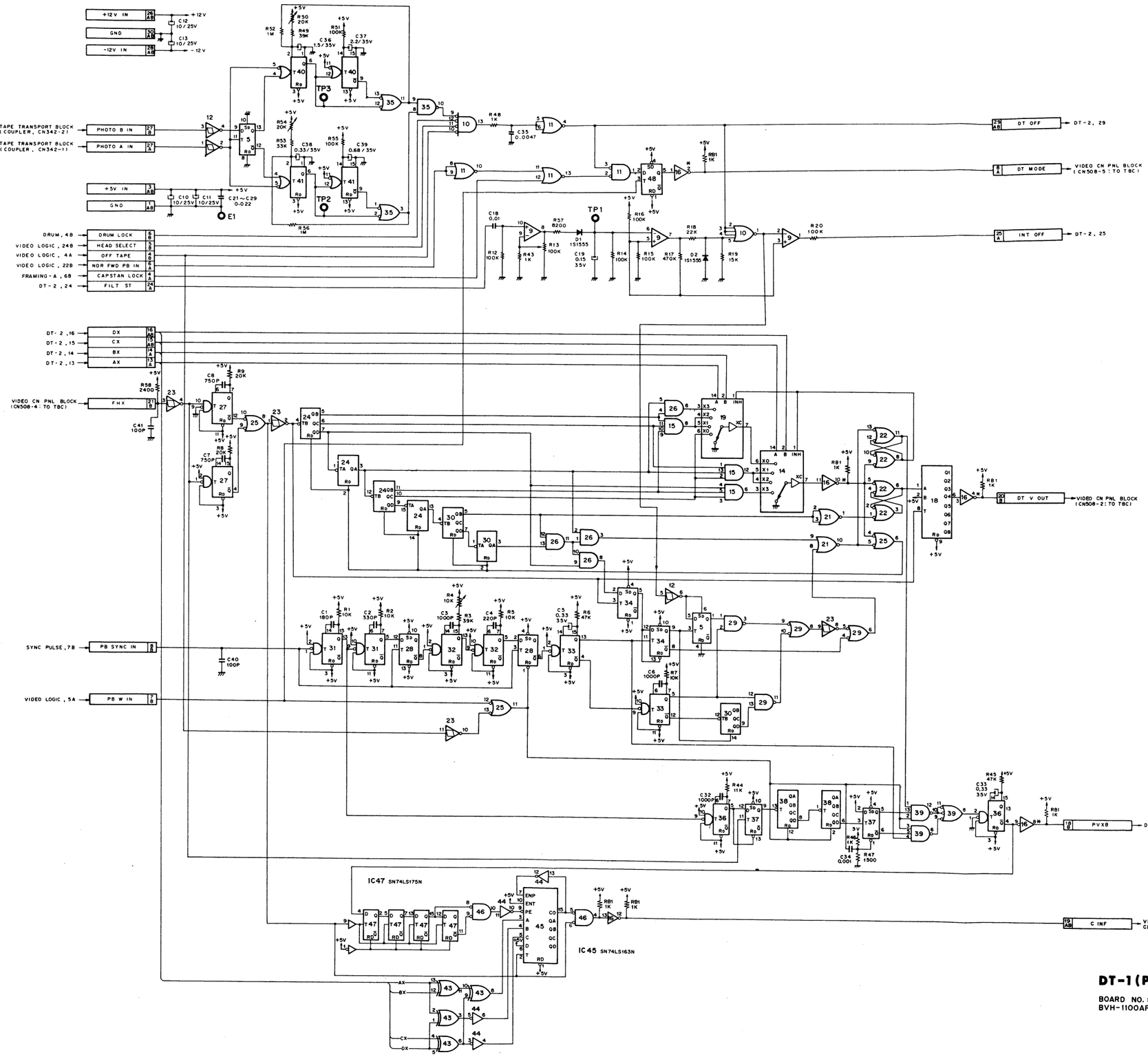

REF NO	TYPE	PIN NO +12V	+5V	GND	-12V
IC 5	MC14013B		14	7	
9	TL074ACN	4			11
10	MC14002B		14	7	
11	SN74LS02B		14	7	
12	MC14584B		14	7	
14	SN74LS153N		16	8	
15	SN74LS11N		14	7	
16	SN7406N		14	7	
18	SN74LS164N		14	7	
19	SN74LS153N		16	8	
20					
21	SN74LS02N		14	7	
22	SN74LS00N		14	7	
23	SN74LS14N		14	7	
24	SN74LS390N		16	8	
25	SN74LS00N		14	7	
26	SN74LS08N		14	7	
27	SN74LS221N		16	8	
28	SN74LS74AN		14	7	
29	SN74LS00N		14	7	
30	SN74LS390N		16	8	
31	SN74LS221N		16	8	
32	SN74LS221N		16	8	
33	SN74LS221N		16	8	
34	SN74LS74AN		14	7	
35	MC14011B		14	7	
36	SN74LS221N		16	8	
37	SN74LS74AN		14	7	
38	SN74LS393N		14	7	
39	SN74LS10N		14	7	
40	MC14538B		16	8	
41	MC14538B		16	8	
43	SN74LS86N		14	7	
44	SN74LS04N		14	7	
45	SN74LS163N		16	8	
46	SN74LS02N		14	7	
47	SN74LS175N		16	8	
48	SN74LS74AN		14	7	

FORMER
NTSC; # 20001 – 20499
PS ; # 20001 – 20399

DT-1 (PS)

BOARD NO. : 1-600-181-14
BVH-1100APS : # 20001 – 20399

DT-1 BOARD — *COMPONENT SIDE* —

NEW
NTSC; # 20501 –
PS ; # 20401 –

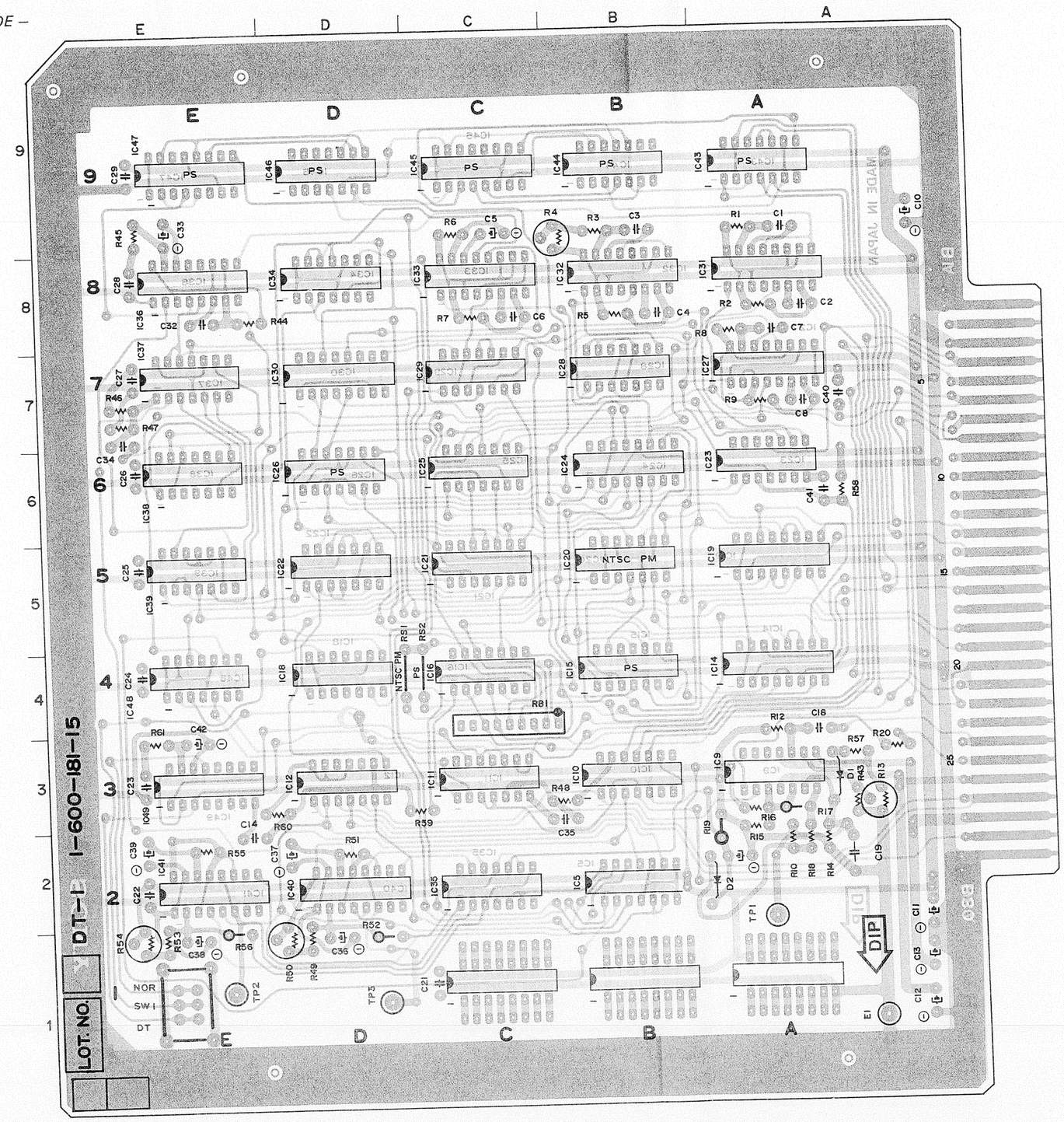

BVH-1100APS
DT-1 BOARD
1-600-181-15

D1 A - 3
D2 A - 2

IC5 B - 2
IC9 A - 3
IC10 B - 3
IC11 C - 3
IC12 D - 3
IC14 A - 4
IC15 B - 4
IC16 C - 4
IC18 D - 4
IC19 A - 5
IC21 C - 5
IC22 D - 5
IC23 A - 6
IC24 B - 6
IC25 C - 6
IC26 D - 6
IC27 A - 7
IC28 B - 7
IC29 C - 7
IC30 D - 7
IC31 A - 8
IC32 B - 8
IC33 C - 8
IC34 D - 8
IC35 C - 2
IC36 E - 8
IC37 E - 7
IC38 E - 6
IC39 E - 5
IC40 D - 2
IC41 E - 2
IC43 A - 9
IC44 B - 9
IC45 C - 9
IC46 D - 9
IC47 E - 9
IC48 E - 4
IC49 E - 3

R4 B - 9
R13 A - 3
R50 D - 1
R54 E - 1

SW1 E - 1

TP1 A - 2
TP2 E - 1
TP3 D - 1

TPE1 A - 1

BVH-1100A (NTSC)
BVH-1100APM
DT-1 BOARD
1-600-181-15

D1 A - 3
D2 A - 2

IC5 B - 2
IC9 A - 3
IC10 B - 3
IC11 C - 3
IC12 D - 3
IC14 A - 4
IC16 C - 4
IC18 D - 4
IC19 A - 5
IC20 B - 5
IC21 C - 5
IC22 D - 5
IC23 A - 6
IC24 B - 6
IC25 C - 6
IC27 A - 7
IC28 B - 7
IC29 C - 7
IC30 D - 7
IC31 A - 8
IC32 B - 8
IC33 C - 8
IC34 D - 8
IC35 C - 2
IC36 E - 8
IC37 E - 7
IC38 E - 6
IC39 E - 5
IC40 D - 2
IC41 E - 2
IC48 E - 4
IC49 E - 3

R4 B - 9
R13 A - 3
R50 D - 1
R54 E - 1

SW1 E - 1

TP1 A - 2
TP2 E - 1
TP3 D - 1

TPE1 A - 1

NEW
NTSC; # 20501 –
PS ; # 20401 –

DT-1 BOARD

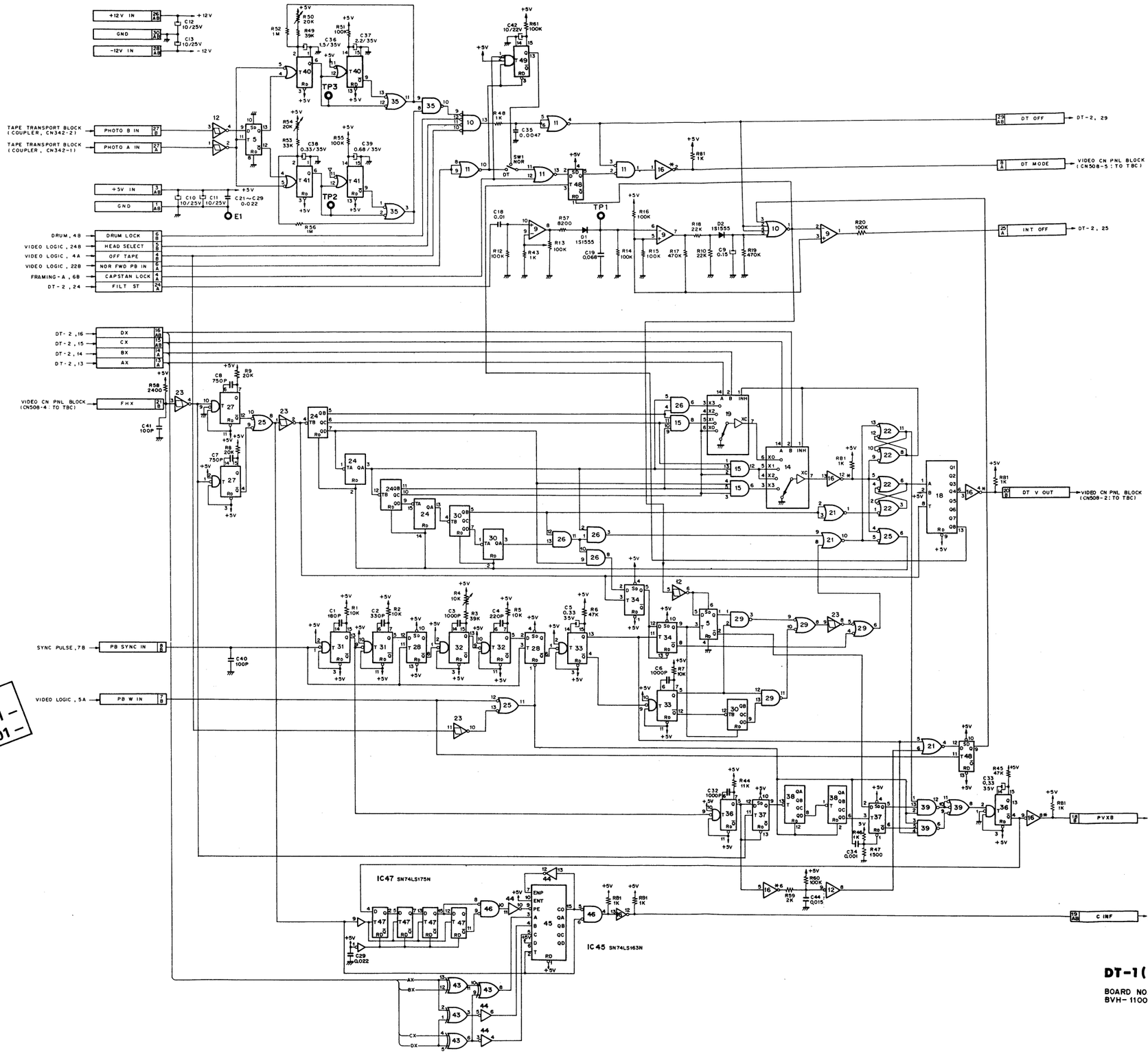

REF NO	TYPE	PIN NO			
		+12V	+5V	GND	-12V
IC 5	MC14013B		14	7	
9	TL074ACN	4			11
10	MC14002B		14	7	
11	SN74LS02B		14	7	
12	MC14584B		14	7	
14	SN74LS153N		16	8	
15	SN74LS11N		14	7	
16	SN7406N		14	7	
18	SN74LS164N		14	7	
19	SN74LS153N		16	8	
20					
21	SN74LS02N		14	7	
22	SN74LS00N		14	7	
23	SN74LS14N		14	7	
24	SN74LS390N		16	8	
25	SN74LS00N		14	7	
26	SN74LS08N		14	7	
27	SN74LS221N		16	8	
28	SN74LS74AN		14	7	
29	SN74LS00N		14	7	
30	SN74LS390N		16	8	
31	SN74LS221N		16	8	
32	SN74LS221N		16	8	
33	SN74LS221N		16	8	
34	SN74LS74AN		14	7	
35	MC14011B		14	7	
36	SN74LS221N		16	8	
37	SN74LS74AN		14	7	
38	SN74LS393N		14	7	
39	SN74LS10N		14	7	
40	MC14538B		16	8	
41	MC14538B		16	8	
43	SN74LS86N		14	7	
44	SN74LS04N		14	7	
45	SN74LS163N		16	8	
46	SN74LS02N		14	7	
47	SN74LS175N		16	8	
48	SN74LS74AN		14	7	

NEW
NTSC; #20501 –
PS ; #20401 –

NEW
NTSC; #20501 –
PS ; #20401 –

DT-1 (PS)

BOARD NO. : 1-600-181-15
BVH-1100A PS : * 20401 AND UP

DT-2 BOARD — *COMPONENT SIDE* —

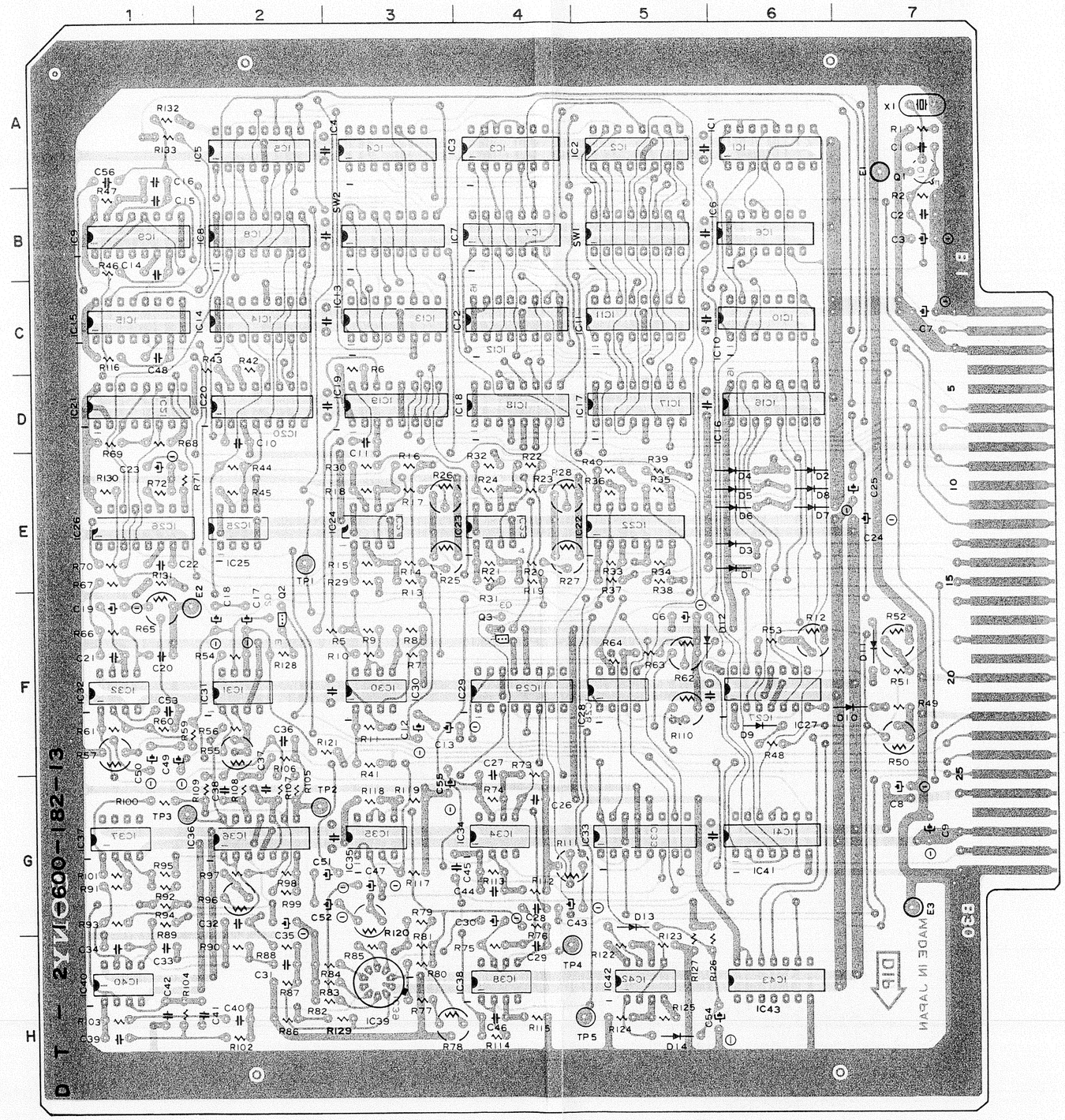

BVH-1100A (NTSC)
BVH-1100APS
BVH-1100APM
DT-2 BOARD
1-600-182-13

D1 E - 6
D2 E - 6
D3 E - 6
D4 E - 6
D5 E - 6
D6 E - 6
D7 E - 6
D8 E - 6
D9 F - 6
D10 F - 7
D11 F - 7
D12 F - 5
D13 G - 5
D14 H - 5

E1 A - 7
E2 F - 1
E3 G - 7

IC1 A - 6
IC2 A - 5
IC3 A - 4
IC4 A - 3
IC5 A - 2
IC6 B - 6
IC7 B - 4
IC8 B - 2
IC9 B - 1
IC10 C - 6
IC11 C - 5
IC12 C - 4
IC13 C - 3
IC14 C - 2
IC15 C - 1
IC16 D - 6
IC17 D - 5
IC18 D - 4
IC19 D - 3
IC20 D - 2
IC21 D - 1
IC22 E - 5
IC23 E - 4
IC24 E - 3
IC25 E - 2
IC26 E - 1
IC27 F - 6
IC28 F - 5
IC29 F - 4
IC30 F - 3
IC31 F - 2
IC32 F - 1
IC33 G - 5
IC34 G - 4
IC35 G - 3
IC36 G - 2
IC37 G - 1
IC38 H - 4
IC39 H - 3
IC40 H - 1
IC41 G - 6
IC42 H - 5
IC43 H - 6

Q1 A - 7
Q2 F - 2
Q3 F - 4

R12 F - 6
R25 E - 3
R26 E - 3
R27 E - 4
R28 E - 4
R50 F - 7
R52 F - 7
R55 F - 2
R57 F - 1
R62 F - 5
R65 F - 1
R78 H - 3
R96 G - 2
R110 F - 5
R111 G - 4
R120 G - 3

SW1 B - 5
SW2 B - 3

TP1 E - 2
TP2 G - 2
TP3 G - 1
TP4 H - 4
TP5 H - 4

DT-2 BOARD

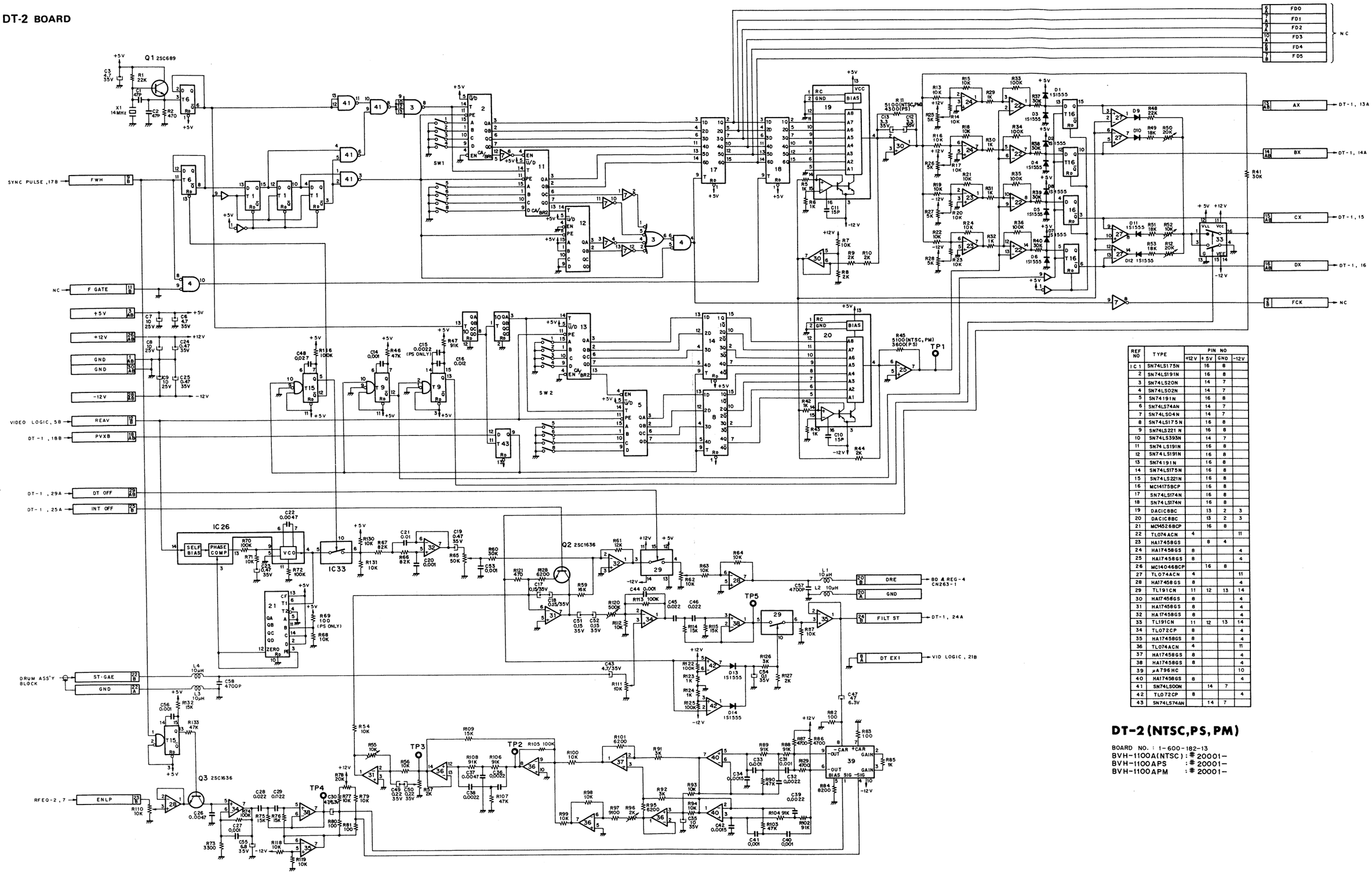

REF NO	TYPE	PIN NO +12V	+5V	GND	-12V
IC1	SN74LS175N		16	8	
2	SN74LS191N		16	8	
3	SN74LS20N		14	7	
4	SN74LS02N		14	7	
5	SN74191N		16	8	
6	SN74LS74AN		14	7	
7	SN74LS04N		14	7	
8	SN74LS175N		16	8	
9	SN74LS221N		16	8	
10	SN74LS393N		14	7	
11	SN74LS191N		16	8	
12	SN74LS191N		16	8	
13	SN74191N		16	8	
14	SN74LS175N		16	8	
15	SN74LS221N		16	8	
16	MC14175BCP		16	8	
17	SN74LS174N		16	8	
18	SN74LS174N		16	8	
19	DAC1088C		13	2	3
20	DAC1088C		13	2	3
21	MC14526BCP		16	8	
22	TL074ACN	4			11
23	HA17458GS		8	4	
24	HA17458GS	8			4
25	HA17458GS	8			4
26	MC14046BCP		16	8	
27	TL074ACN	4			11
28	HA17458GS	8			4
29	TL191CN	11	12	13	14
30	HA17456GS	8			4
31	HA17458GS	8			4
32	HA17458GS	8			4
33	TL191CN	11	12	13	14
34	TL072CP	8			4
35	HA17458GS	8			4
36	TL074ACN	4			11
37	HA17458GS	8			4
38	HA17458GS	8			4
39	μA796HC				10
40	HA17458GS	8			4
41	SN74LS00N		14	7	
42	TL072CP	8			4
43	SN74LS74AN		14	7	

DT-2 (NTSC,PS, PM)

BOARD NO. : 1-600-182-13
BVH-1100A(NTSC) : # 20001-
BVH-1100APS : # 20001-
BVH-1100APM : # 20001-

FRAMING-A BOARD — *COMPONENT SIDE* —

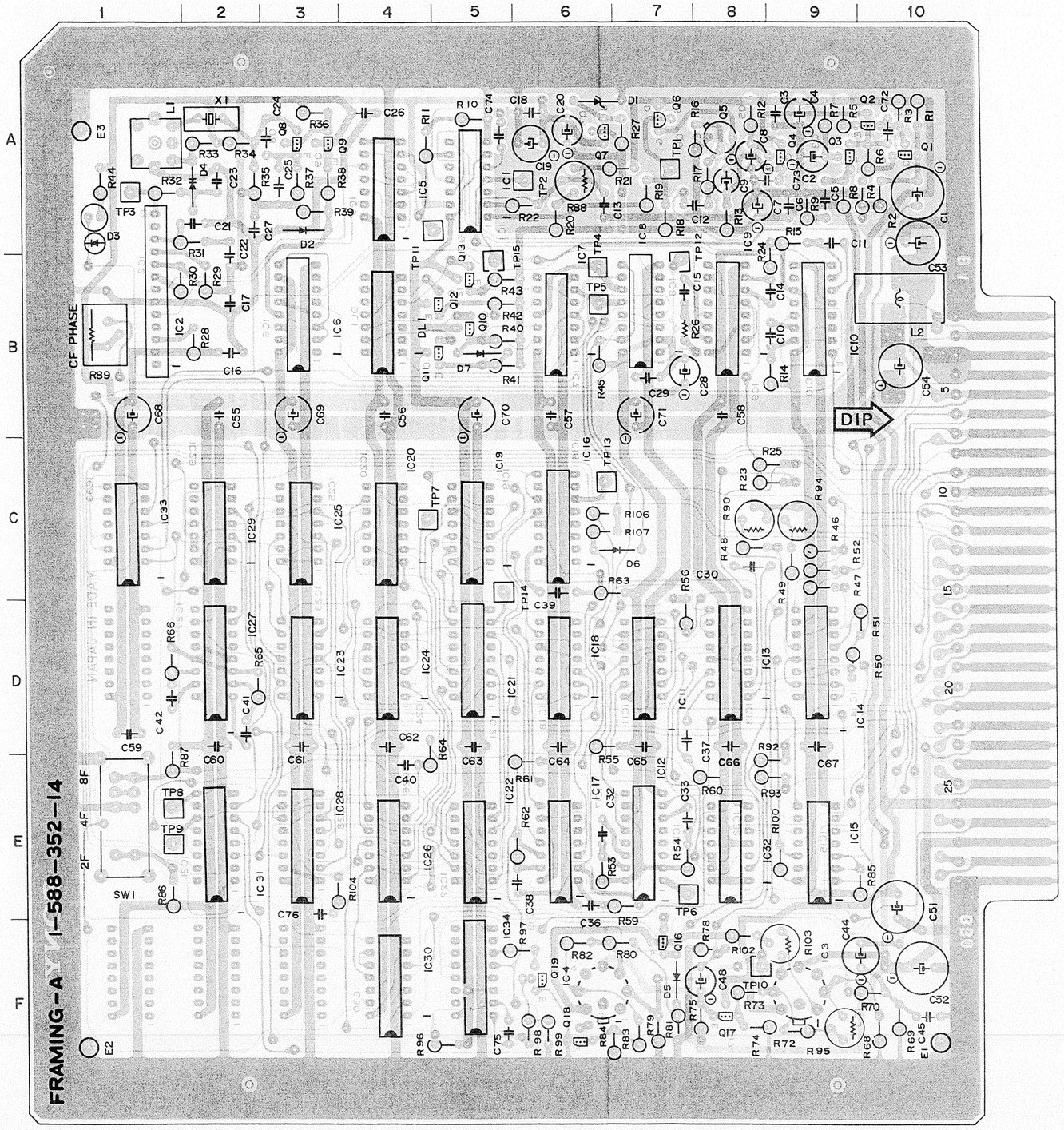

BVH-1100A (NTSC)
BVH-1100APS
BVH-1100APM
FRAMING-A BOARD
1-588-352-14

D1 A - 6
D2 A - 3
D3 A - 1
D4 A - 2
D5 F - 7
D6 C - 7
D7 B - 5

E1 F - 10
E2 F - 1
E3 A - 1

IC1 A - 5
IC2 B - 1
IC3 F - 9
IC4 F - 6
IC5 A - 6
IC6 B - 3
IC7 B - 6
IC8 B - 7
IC9 B - 8
IC10 B - 9
IC11 D - 7
IC12 E - 7
IC13 D - 8
IC14 D - 9
IC15 E - 9
IC16 C - 6
IC17 E - 6
IC18 D - 6
IC19 C - 5
IC20 C - 4
IC21 D - 5
IC22 E - 5
IC23 D - 3
IC24 D - 4
IC25 C - 3
IC26 E - 4
IC27 D - 2
IC28 E - 3
IC29 C - 2
IC30 F - 4
IC31 E - 2
IC32 E - 8
IC33 C - 1
IC34 F - 5
IC35 F - 3

L1 A - 1

Q1 A - 10
Q2 A - 10
Q3 A - 9
Q4 A - 9
Q5 A - 8
Q6 E - 7
Q7 A - 6
Q8 A - 3
Q9 A - 3
Q10 B - 5
Q11 B - 5
Q16 F - 7
Q17 F - 8
Q18 F - 6
Q19 F - 6

R88 A - 6
R89 B - 1
R90 C - 8
R94 C - 9

SW1 E - 1

TP1 A - 7
TP2 A - 6
TP3 A - 1
TP4 B - 6
TP5 B - 6
TP6 E - 7
TP7 C - 4
TP8 E - 1
TP9 E - 1
TP10 F - 8
TP11 A - 4
TP12 B - 7
TP13 C - 6
TP14 C - 5
TP15 B - 5

FORMER
NTSC; # 20001 – 20499
PS ; # 20001 – 20399

FORMER
NTSC; # 20001 – 20499
PS ; # 20001 – 20399

FRAMING-A BOARD

Framing Servo

FORMER
NTSC; # 20001 – 20499
PS ; # 20001 – 20399

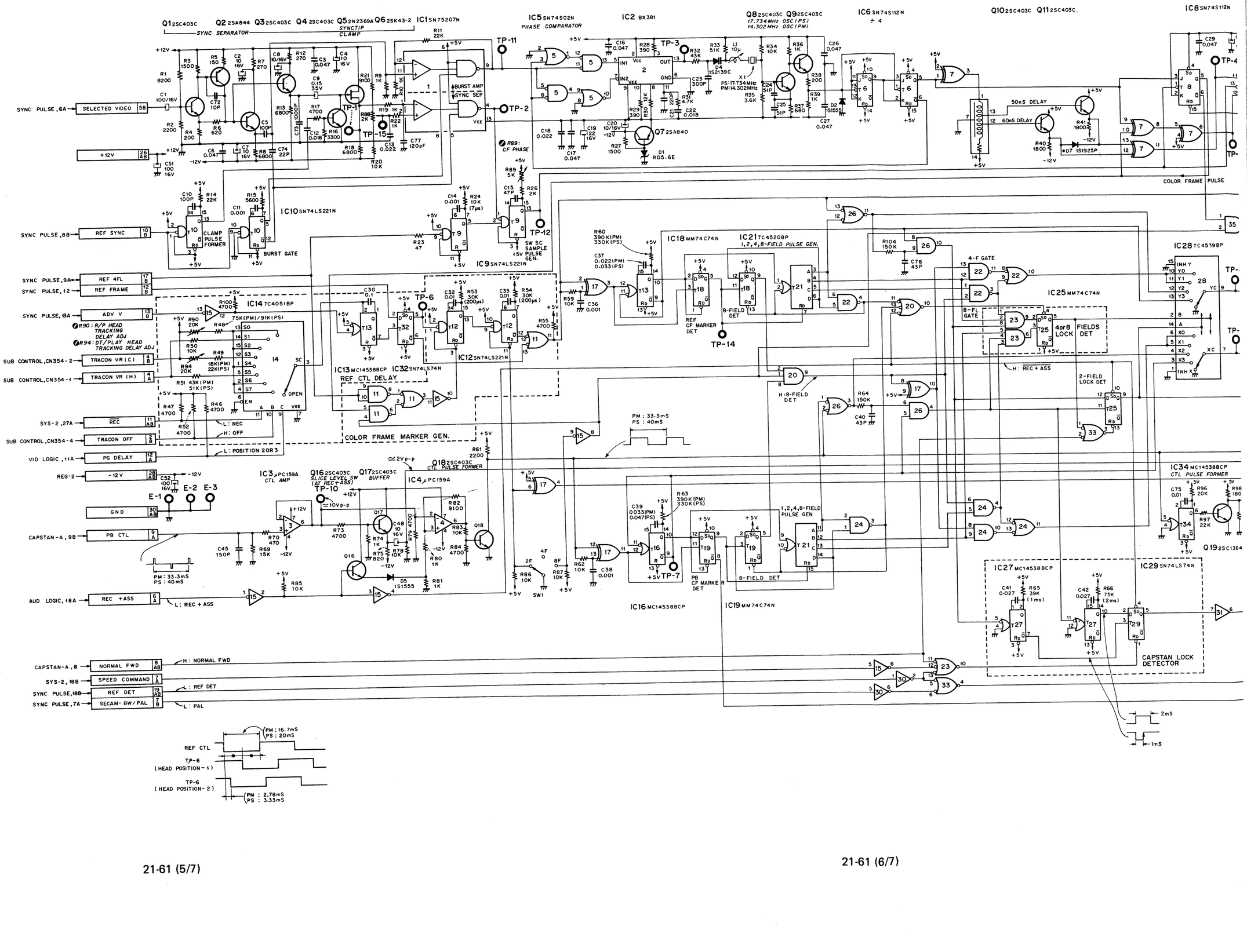

21-61 (5/7)

21-61 (6/7)

FRAMING-A

FORMER
NTSC; # 20001 – 20499
PS ; # 20001 – 20399

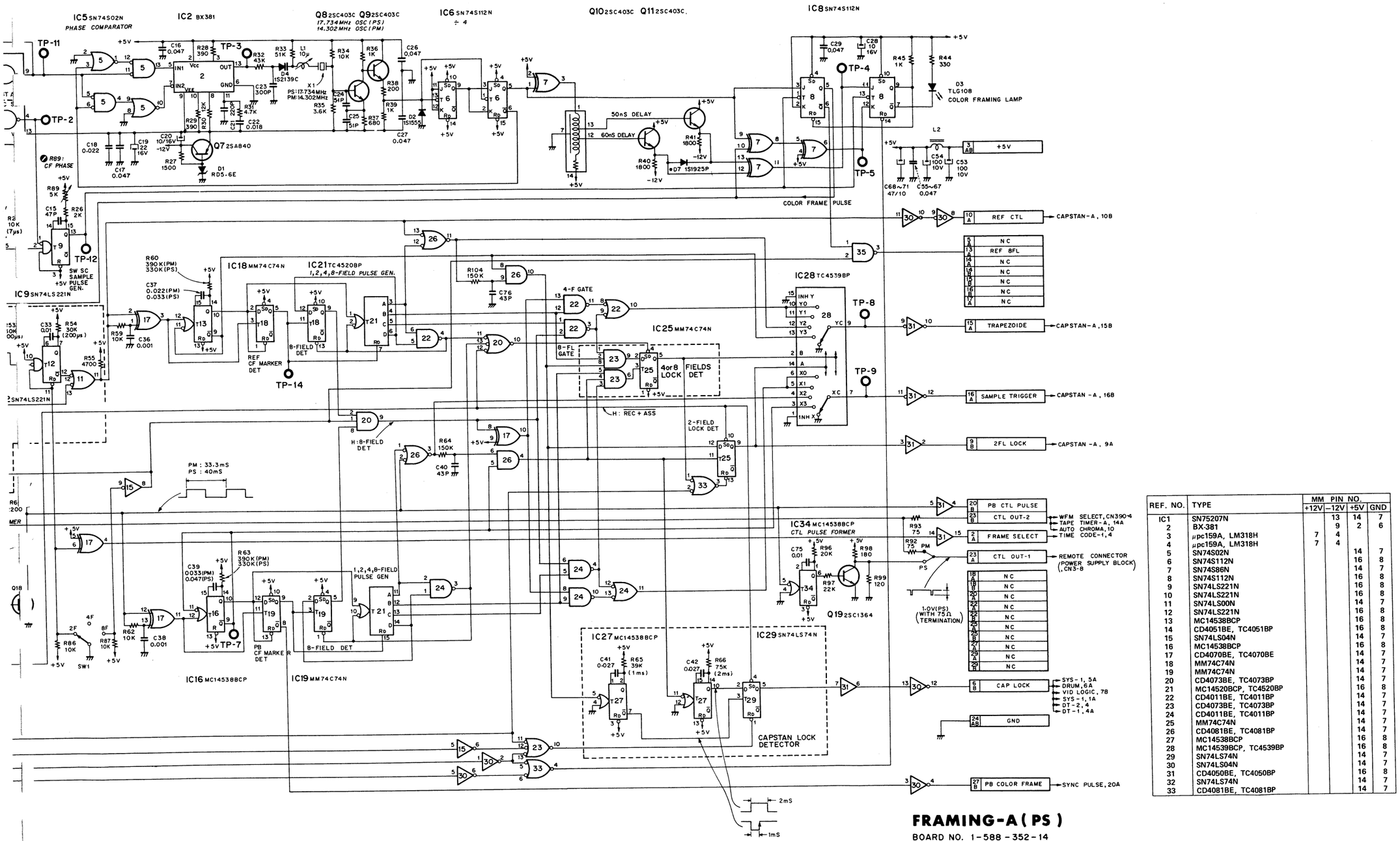

FRAMING-A (PS)

BOARD NO. 1-588-352-14
BVH-1100APS : # 20001-20399

REF. NO.	TYPE	MM PIN NO. +12V	−12V	+5V	GND
IC1	SN75207N		13	14	7
2	BX-381		9	2	6
3	μpc159A, LM318H	7	4		
4	μpc159A, LM318H	7	4		
5	SN74S02N			14	7
6	SN74S112N			16	8
7	SN74S86N			14	7
8	SN74S112N			16	8
9	SN74LS221N			16	8
10	SN74LS221N			16	8
11	SN74LS00N			14	7
12	SN74LS221N			16	8
13	MC14538BCP			16	8
14	CD4051BE, TC4051BP			16	8
15	SN74LS04N			14	7
16	MC14538BCP			16	8
17	CD4070BE, TC4070BE			14	7
18	MM74C74N			14	7
19	MM74C74N			14	7
20	CD4073BE, TC4073BP			14	7
21	MC14520BCP, TC4520BP			16	8
22	CD4011BE, TC4011BP			14	7
23	CD4073BE, TC4073BP			14	7
24	CD4011BE, TC4011BP			14	7
25	MM74C74N			14	7
26	CD4081BE, TC4081BP			14	7
27	MC14538BCP			16	8
28	MC14539BCP, TC4539BP			16	8
29	SN74LS74N			14	7
30	SN74LS04N			14	7
31	CD4050BE, TC4050BP			16	8
32	SN74LS74N			14	7
33	CD4081BE, TC4081BP			14	7

FRAMING-A BOARD — *COMPONENT SIDE* —

NEW
NTSC; # 20501 –
PS ; # 20401 –

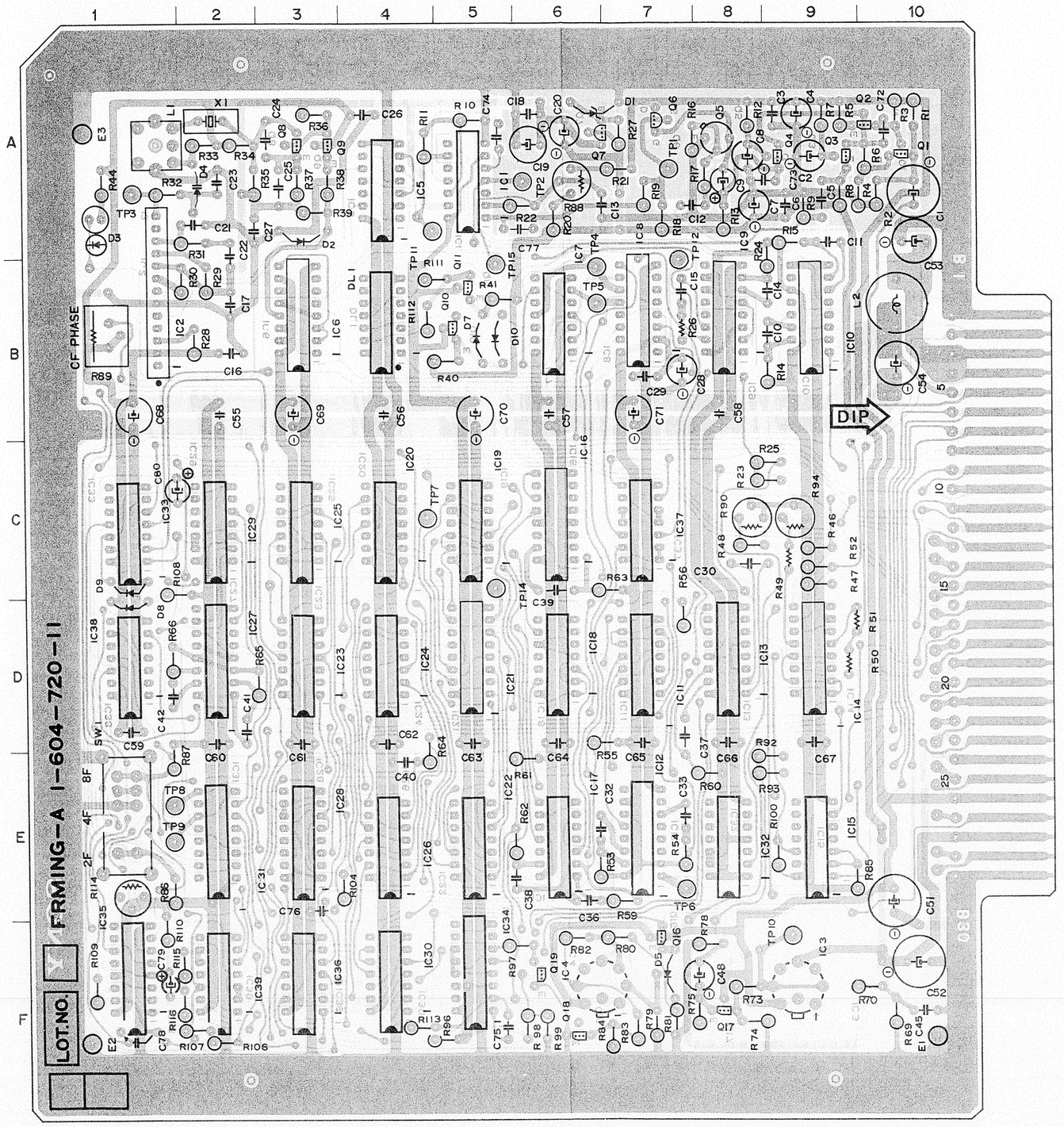

BVH-1100A (NTSC)
BVH-1100APS
BVH-1100APM
FRAMING-A BOARD
1-604-720-11

D1 A - 6
D2 A - 3
D3 A - 1
D4 A - 2
D5 F - 7
D8 D - 1
D9 C - 1
D10 B - 5

E1 F - 10
E2 F - 1
E3 A - 1

IC1 A - 5
IC2 B - 1
IC3 F - 9
IC4 F - 6
IC5 A - 4
IC6 B - 3
IC7 B - 6
IC8 B - 7
IC9 B - 8
IC10 B - 9
IC11 D - 7
IC12 E - 7
IC13 D - 8
IC14 D - 9
IC15 E - 9
IC16 C - 6
IC17 E - 6
IC18 D - 6
IC19 C - 5
IC20 C - 4
IC21 D - 5
IC22 E - 5
IC23 D - 3
IC24 D - 4
IC25 C - 3
IC26 E - 4
IC27 D - 2
IC28 E - 3
IC29 C - 2
IC30 F - 4
IC32 E - 8
IC33 C - 1
IC34 F - 5
IC36 F - 3
IC37 C - 7
IC38 D - 1
IC39 F - 2

L1 A - 1

Q1 A - 10
Q2 A - 10
Q3 A - 9
Q4 A - 9
Q5 A - 8
Q6 A - 7
Q7 A - 6
Q8 A - 3
Q9 A - 3
Q10 B - 5
Q11 B - 5
Q16 F - 7
Q17 F - 8
Q18 F - 6
Q19 F - 6

R88 A - 6
R89 B - 1
R90 C - 8
R94 C - 9
R114 E - 1

SW1 E - 1

TP1 A - 7
TP2 A - 6
TP3 A - 1
TP4 B - 6
TP5 B - 6
TP6 E - 7
TP7 C - 4
TP8 E - 1
TP9 E - 1
TP10 F - 9
TP11 A - 4
TP12 A - 8
TP14 C - 5
TP15 B - 5

NEW
NTSC; # 20501 –
PS ; # 20401 –

FRAMING-A BOARD

Framing Servo

NEW
NTSC; #20501 –
PS ; #20401 –

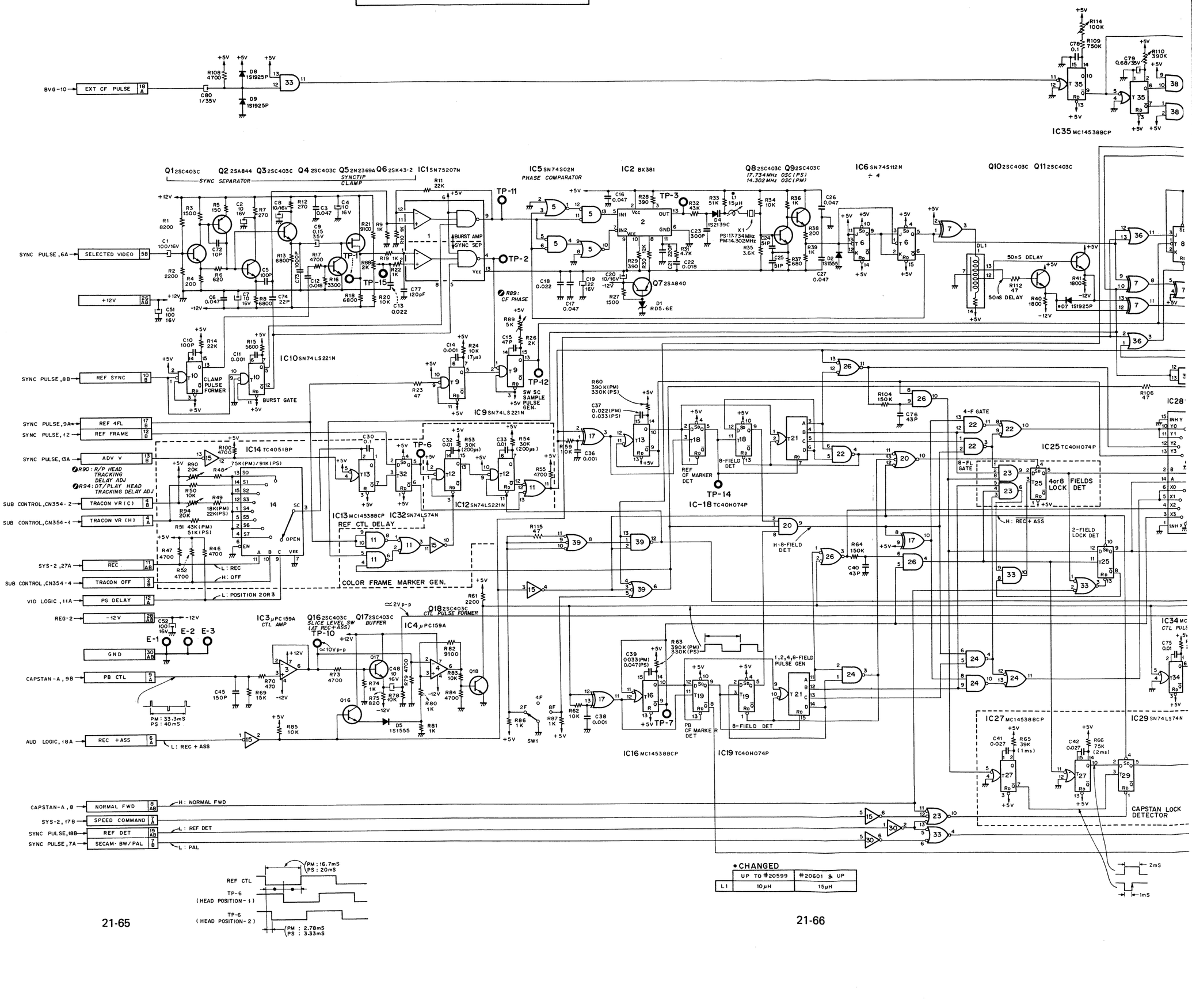

• CHANGED		
	UP TO #20599	#20601 & UP
L1	10μH	15μH

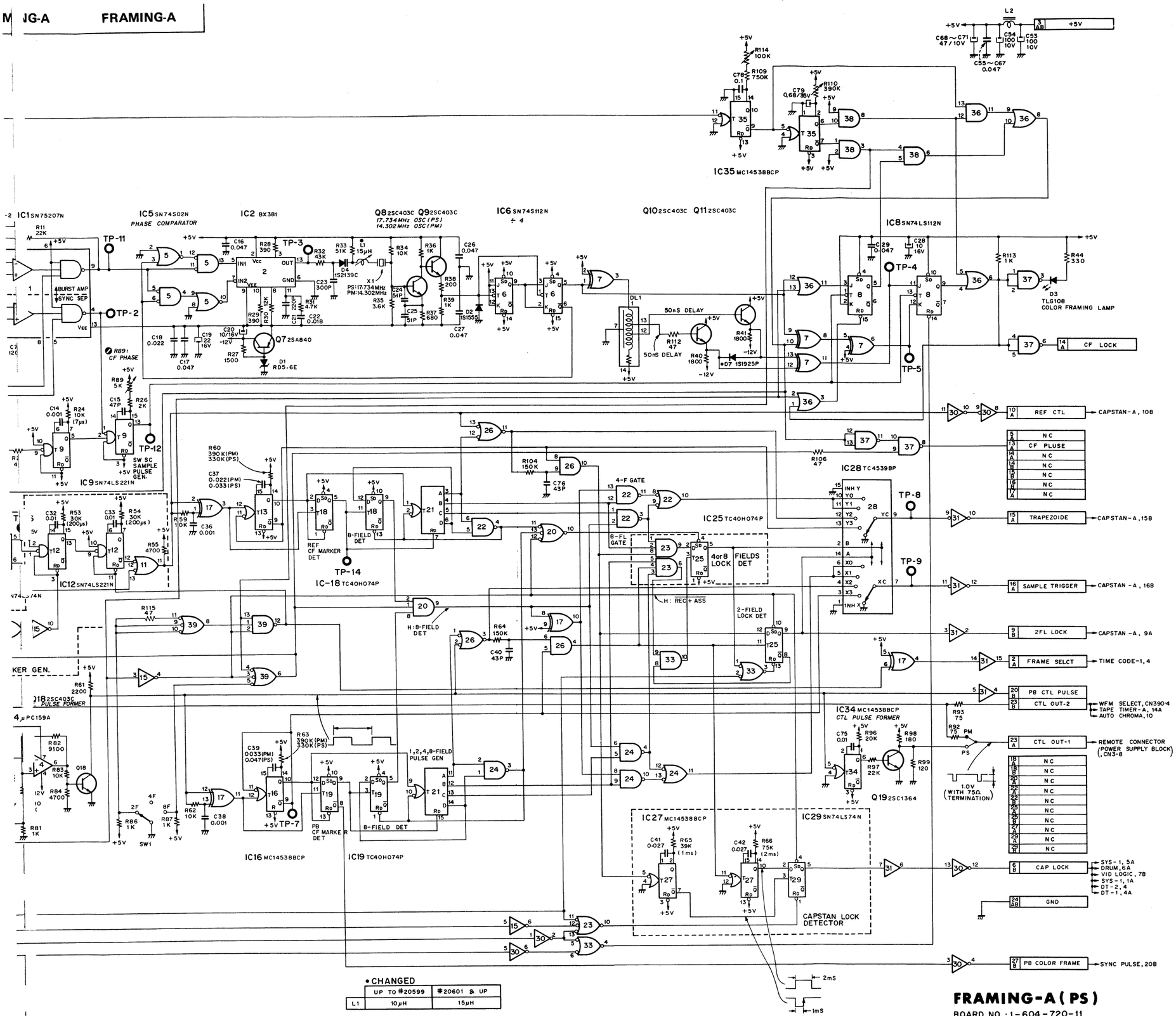

• CHANGED

	UP TO #20599	#20601 & UP
L1	10μH	15μH

NEW
NTSC; # 20501 –
PS ; # 20401 –

REF. NO.	TYPE	MM PIN NO. +12V	−12V	+5V	GND
IC1	SN75207N		13	14	7
2	BX-381		9	2	6
3	μpc159A, LM318H	7	4		
4	μpc159A, LM318H	7	4		
5	SN74S02N			14	7
6	SN74S112N			16	8
7	SN74S86N			14	7
8	SN74S112N			16	8
9	SN74LS221N			16	8
10	SN74LS221N			16	8
11	SN74LS00N			14	7
12	SN74LS221N			16	8
13	MC14538BCP			16	8
14	CD4051BE, TC4051BP			16	8
15	SN74LS04N			14	7
16	MC14538BCP			16	8
17	CD4070BE, TC4070BE			14	7
18	TC40H074P			14	7
19	TC40H074P			14	7
20	CD4073BE, TC4073BP			14	7
21	MC14520BCP, TC4520BP			16	8
22	CD4011BE, TC4011BP			14	7
23	CD4073BE, TC4073BP			14	7
24	CD4011BE, TC4011BP			14	7
25	TC40H074P			14	7
26	CD4081BE, TC4081BP			14	7
27	MC14538BCP			16	8
28	MC14539BCP, TC4539BP			16	8
29	SN74LS74N			14	7
30	SN74LS04N			14	7
31	CD4050BE, TC4050BP			16	8
32	SN74LS74N			14	7
33	CD4081BE, TC4081BP			14	7
34	MC14538BCP			16	8
35	MC14538BCP			16	8
36	SN74S32N			14	7
37	SN74LS00N			14	7
38	SN74LS08N			14	7
39	SN74LS10N			14	7

FRAMING-A (PS)

BOARD NO.: 1-604-720-11
BVH-1100A (PS) # 20401 & UP

LINE OUT | LINE OUT

LINE OUT BOARD — *COMPONENT SIDE* —

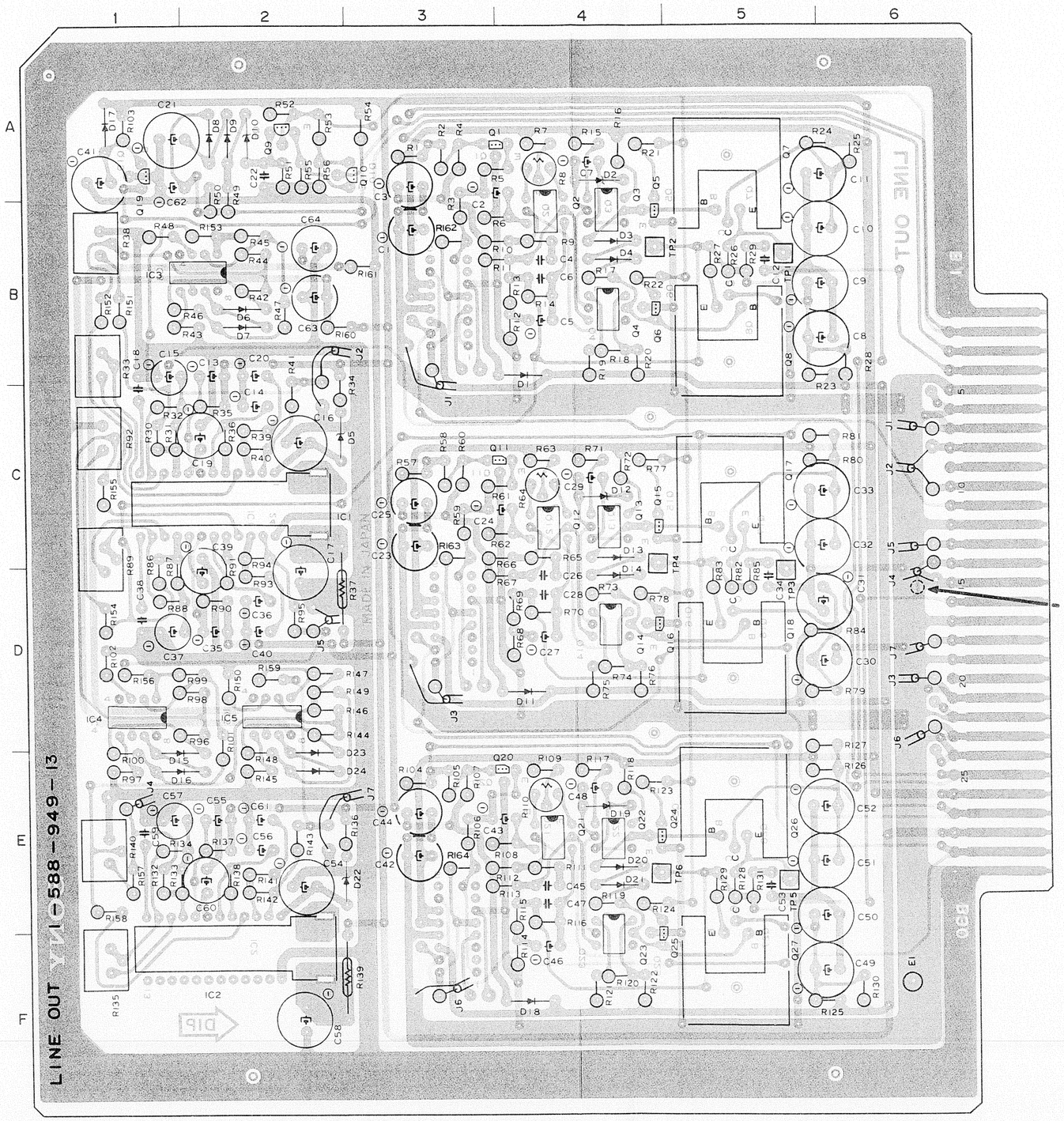

COMPONENT SIDE PATTERN
SHOULD BE CUT FOR:
BVH-1100APS WITH AUDIO-4

D1	4 · B
D2	4 · A
D3	4 · B
D4	4 · B
D5	2 · C
D6	2 · B
D7	2 · B
D8	2 · A
D9	2 · A
D10	2 · A
D11	4 · D
D12	4 · C
D13	4 · C
D14	4 · C
D15	1 · E
D16	1 · E
D17	1 · A
D18	4 · F
D19	4 · E
D20	4 · E
D21	4 · E
D22	2 · E
D23	2 · E
D24	2 · E
E1	6 · F
IC1	2 · C
IC2	2 · F
IC3	1 · B
IC4	1 · D
IC5	2 · D
Q1	4 · A
Q2	4 · A
Q3	4 · A
Q4	4 · B
Q5	4 · A
Q6	4 · B
Q7	5 · A
Q8	5 · B
Q9	2 · A
Q10	2 · A
Q11	4 · C
Q12	4 · C
Q13	4 · C
Q14	4 · D
Q15	4 · C
Q16	4 · D
Q17	5 · C
Q18	5 · D
Q19	1 · A
Q20	4 · E
Q21	4 · E
Q22	4 · E
Q23	4 · F
Q24	4 · E
Q25	4 · F
Q26	5 · E
Q27	5 · F
R8	4 · A
R33	1 · B
R38	1 · B
R64	4 · C
R89	1 · C
R92	1 · C
R110	4 · E
R135	1 · F
R140	1 · E
TP1	5 · A
TP2	4 · B
TP3	5 · C
TP4	4 · C
TP5	5 · E
TP6	4 · E

LINE OUT BOARD

Audio Line Amplifier
Meter Amplifier

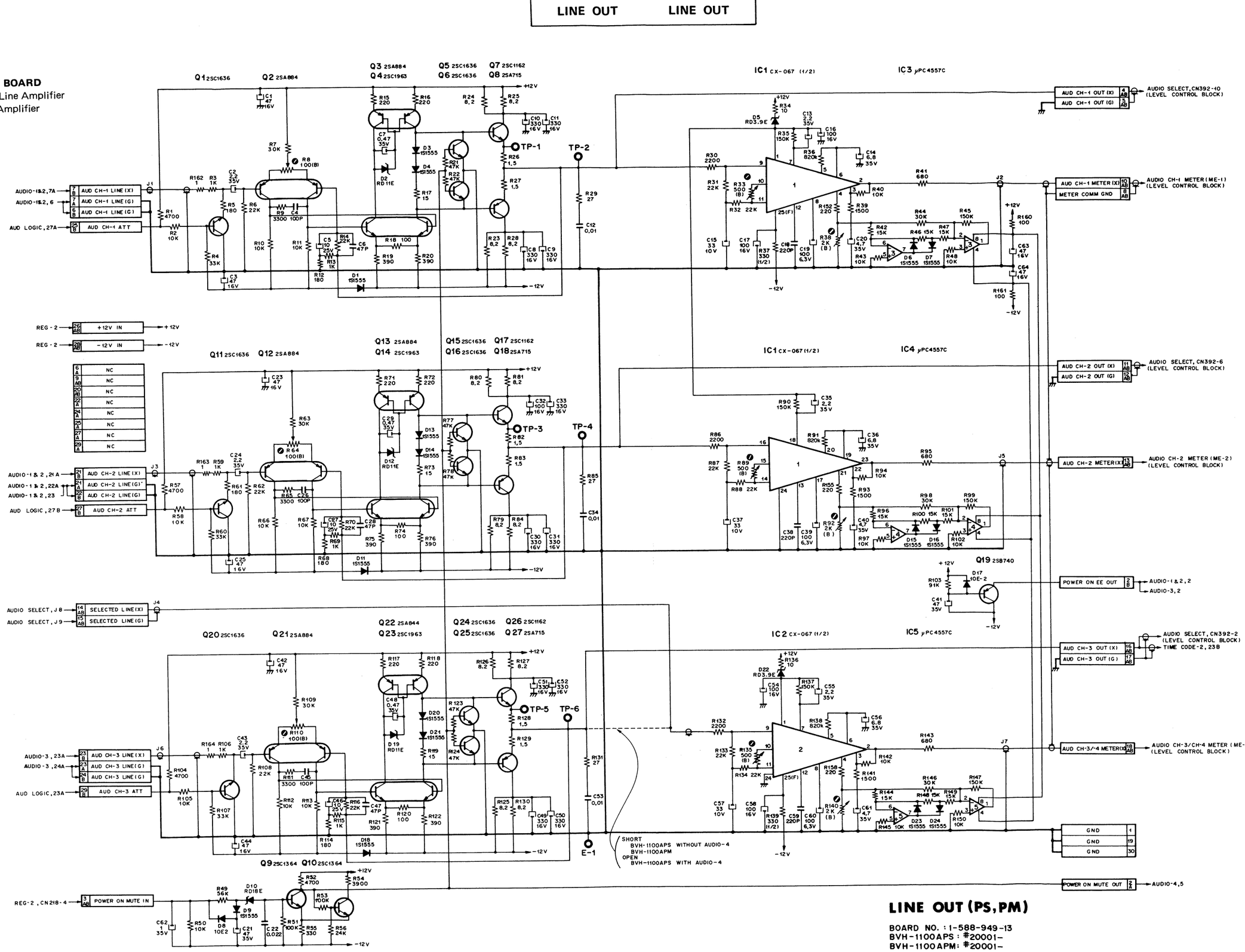

LINE OUT (PS,PM)

BOARD NO. : 1-588-949-13
BVH-1100APS : #20001-
BVH-1100APM: #20001-

MOD MOD

MOD BOARD — *COMPONENT SIDE* —

FORMER
20001 – 20099

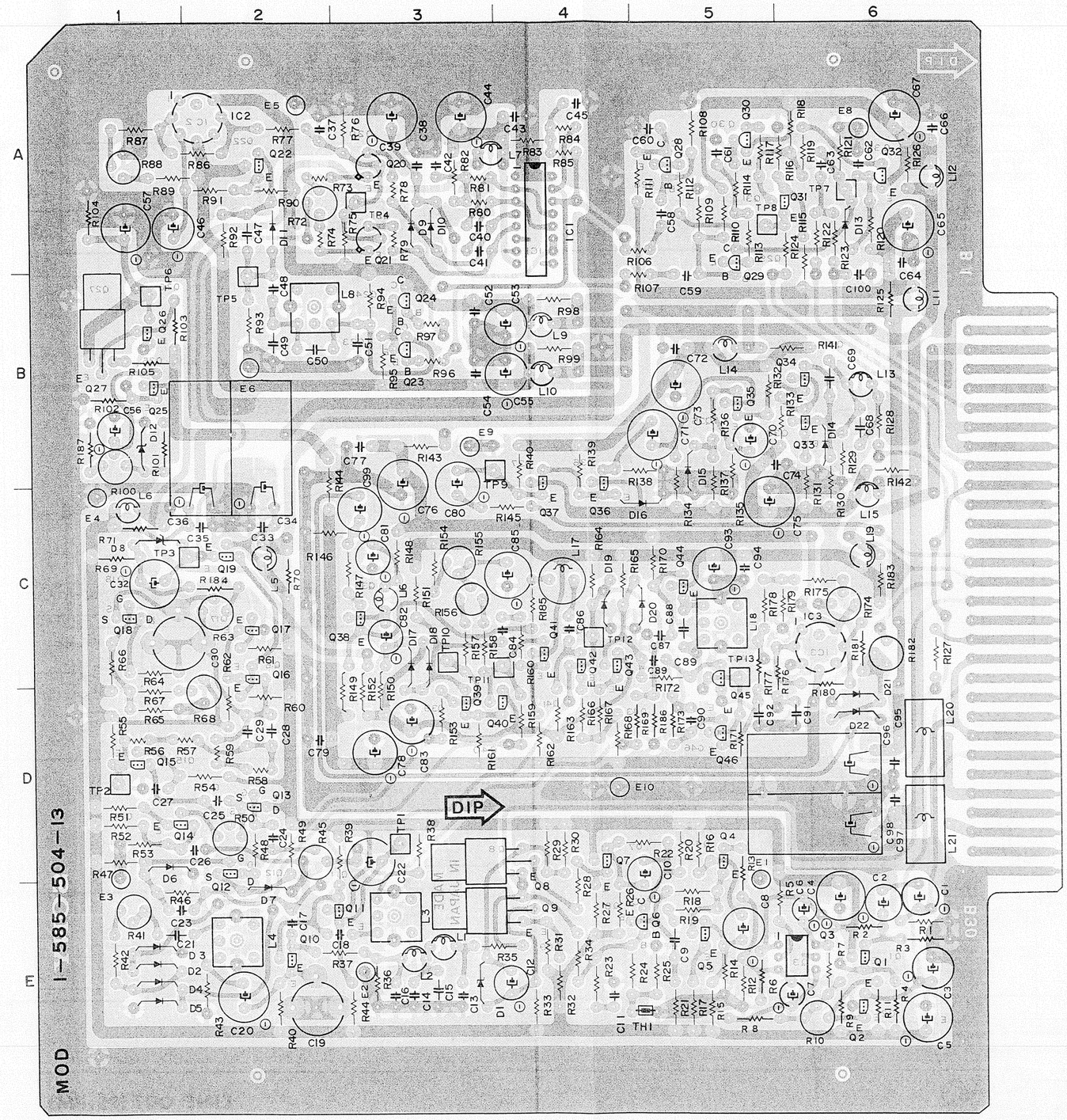

MOD RELAY BOARD
—COMPONENT SIDE—

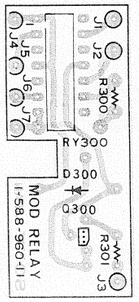

SUB-MD BOARD
—COMPONENT SIDE—

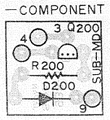

21-73 (3/7)

BVH-1100A (NTSC)
BVH-1100APS
MOD BOARD
1-585-504-13

C19	E - 2	R10	E - 6		
C30	C - 1	R41	E - 1		
		R45	D - 2		
D1	E - 3	R50	D - 2		
D2	E - 1	R63	C - 2		
D3	E - 1	R68	D - 2		
D4	E - 1	R72	A - 2		
D5	E - 1	R88	A - 1		
D6	D - 1	R100	B - 1		
D7	E - 2	R155	C - 3		
D8	C - 1	R156	C - 3		
D9	A - 3	R174	C - 6		
D10	A - 3	R182	C - 6		
D11	A - 2				
D12	B - 1	TP1	D - 3		
D13	A - 6	TP2	D - 1		
D14	B - 6	TP3	C - 1		
D15	B - 5	TP4	A - 3		
D16	C - 5	TP5	B - 2		
D17	C - 3	TP6	B - 1		
D18	C - 3	TP7	A - 6		
D19	C - 4	TP8	A - 5		
D20	C - 5	TP9	B - 3		
D21	D - 6	TP10	C - 3		
D22	D - 6	TP11	C - 4		
		TP12	C - 4		
E1	D - 5	TP13	C - 5		
E2	E - 3				
E3	E - 1				
E4	C - 1				
E5	A - 2				
E6	B - 2				
E8	A - 6				
E9	B - 3				
E10	D - 4				
IC1	A - 4				
IC2	A - 2				
IC3	C - 6				
L3	E - 3				
L4	E - 2				
L8	B - 2				
L18	C - 5				
Q1	E - 6				
Q2	E - 6				
Q3	E - 6				
Q4	D - 5				
Q5	E - 5				
Q6	E - 5				
Q7	D - 4				
Q8	D - 3				
Q9	E - 3				
Q10	E - 2				
Q11	E - 2				
Q12	D - 2				
Q13	D - 2				
Q14	D - 1				
Q15	D - 1				
Q16	C - 2				
Q17	C - 2				
Q18	C - 1				
Q19	C - 2				
Q20	A - 3				
Q21	A - 3				
Q22	A - 2				
Q23	B - 3				
Q24	B - 3				
Q25	B - 1				
Q26	B - 1				
Q27	B - 1				
Q28	A - 5				
Q29	A - 5				
Q30	A - 5				
Q31	A - 6				
Q32	A - 6				
Q33	B - 6				
Q34	B - 6				
Q35	B - 5				
Q36	B - 4				
Q37	B - 4				
Q38	C - 3				
Q39	D - 3				
Q40	D - 4				
Q41	C - 4				
Q42	C - 4				
Q43	C - 4				
Q44	C - 5				
Q45	C - 5				
Q46	D - 5				

FORMER
20001 – 20099

21-73 (4/7)

MOD

MOD BOARD
Modulator

FORMER
20001 – 20099

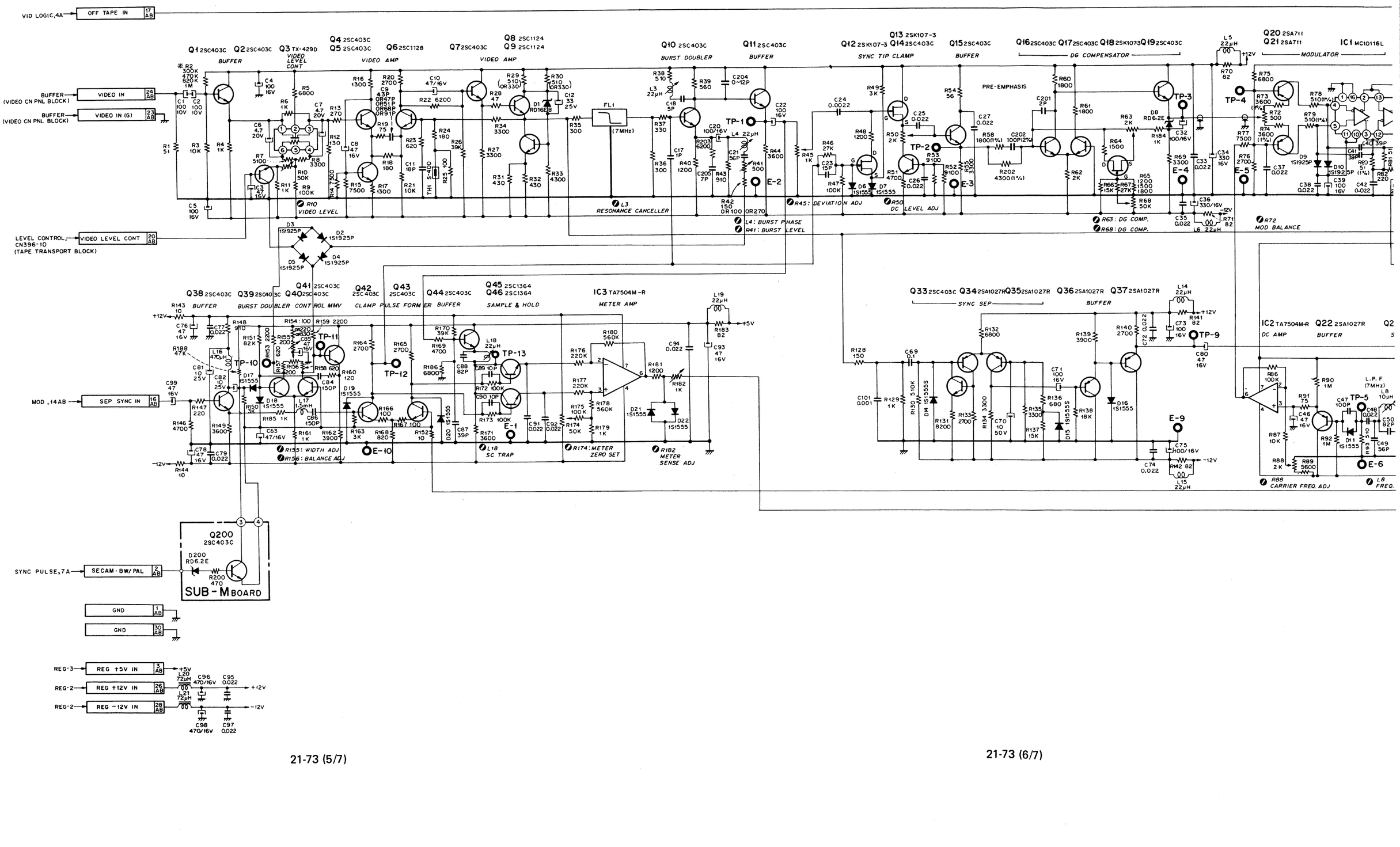

21-73 (5/7)

21-73 (6/7)

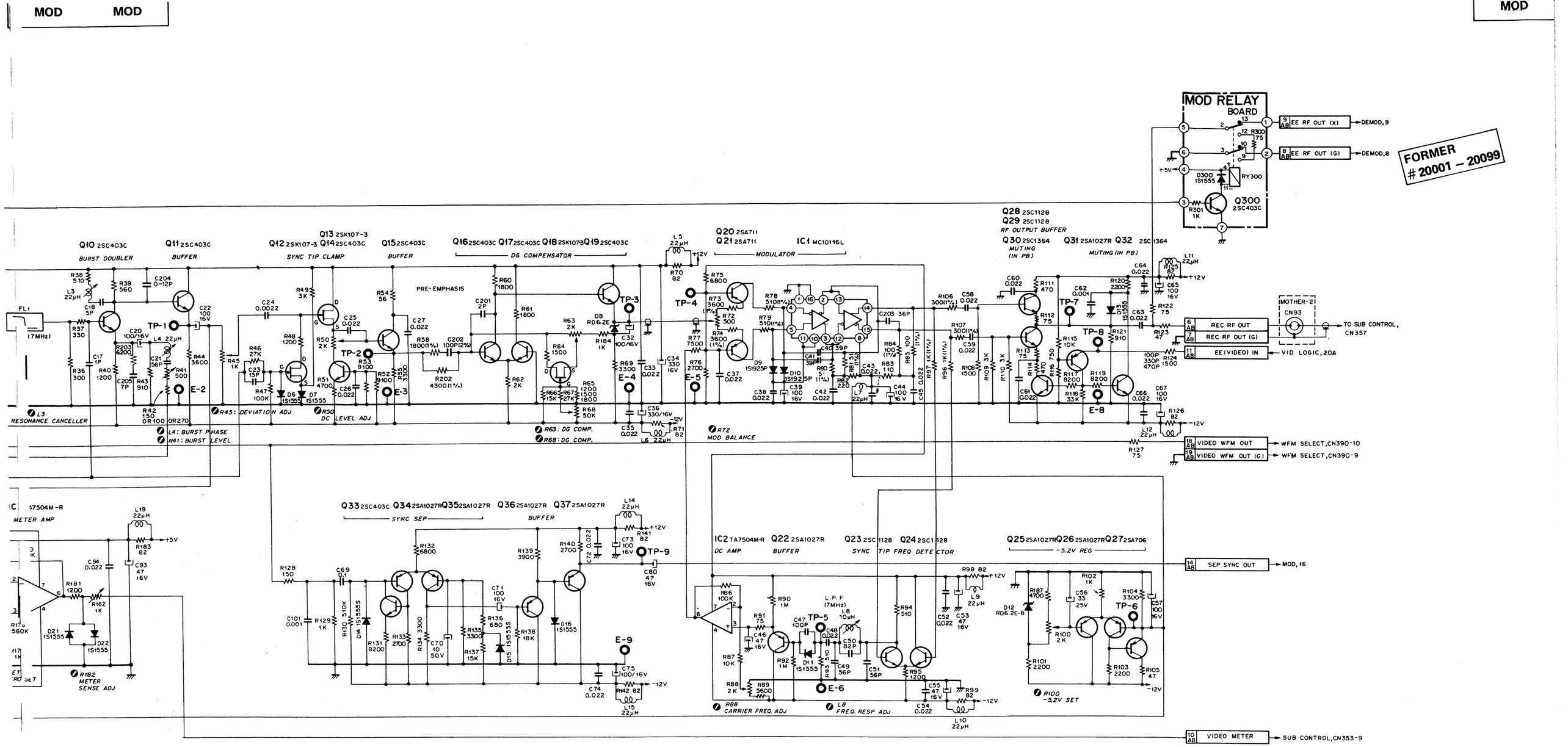

MOD (PS)

BOARD NO. : 1-585-504-13
BVH-1100APS: #20001-20100

MOD MOD

MOD BOARD — *COMPONENT SIDE* —

NEW #20101 –

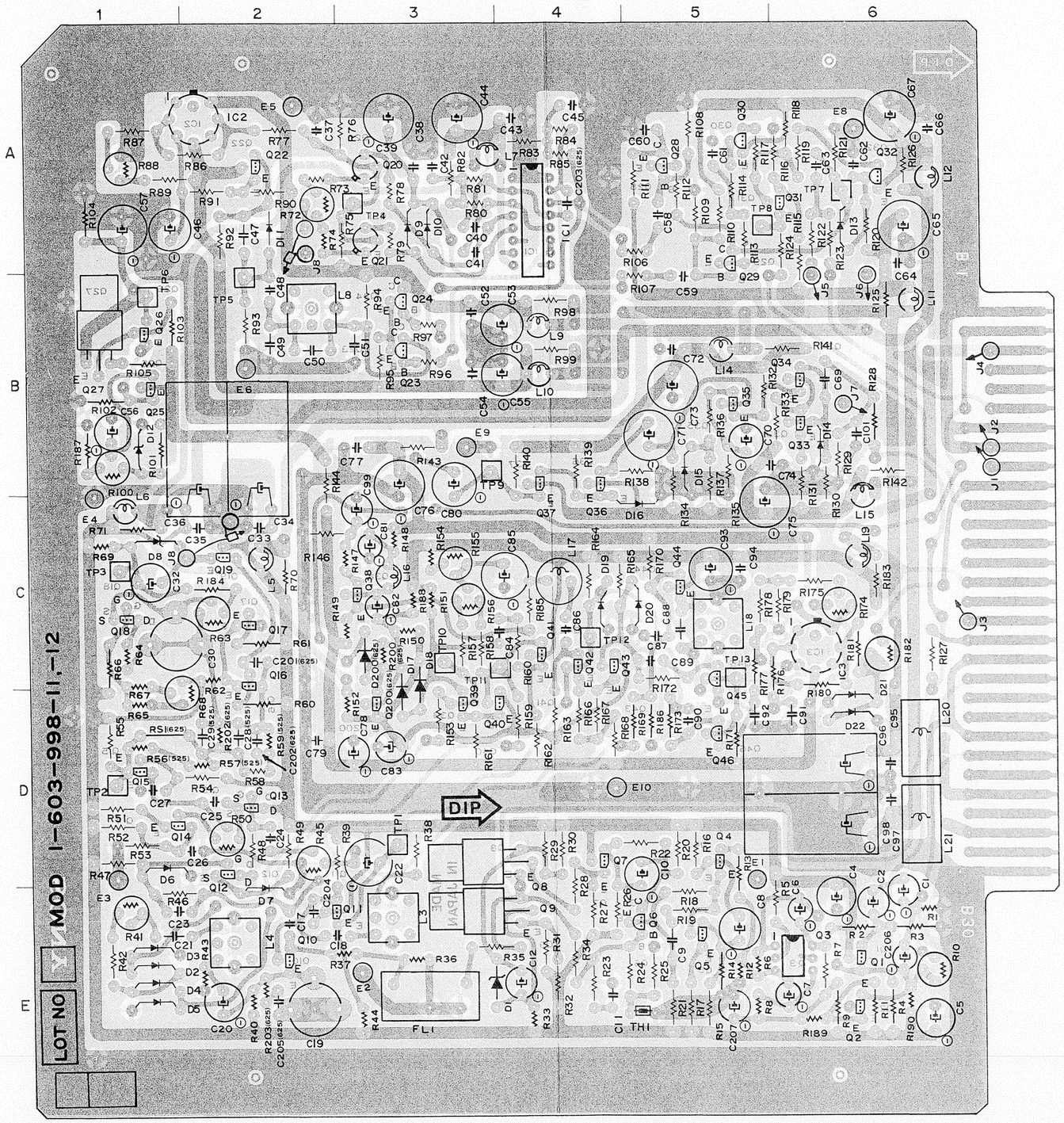

BVH-1100A (NTSC)
BVH-1100APS
BVH-1100APM
MOD BOARD
1-603-998-11/-12

NEW #20101 –

C19	E · 2	R10	E · 6	D1	E · 3	TP1	D · 3
C30	C · 1	R41	E · 1	D2	E · 1	TP2	D · 1
		R45	D · 2	D3	E · 1	TP3	C · 1
D1	E · 3	R50	D · 2	D4	E · 1	TP4	A · 3
D2	E · 1	R63	C · 3	D5	E · 1	TP5	B · 2
D3	E · 1	R68	D · 2	D6	D · 1	TP6	B · 1
D4	E · 1	R72	A · 2	D7	E · 2	TP7	A · 6
D5	E · 1	R88	A · 1	D8	C · 1	TP8	A · 5
D6	D · 1	R100	B · 1	D9	A · 3	TP9	B · 3
D7	E · 2	R155	C · 3	D10	A · 3	TP10	C · 3
D8	C · 1	R156	C · 3	D11	A · 2	TP11	C · 3
D9	A · 3	R174	C · 6	D12	B · 1	TP12	C · 4
D10	A · 3	R182	C · 6	D13	A · 6	TP13	C · 5
D11	A · 2			D14	B · 6		
D12	B · 1			D15	B · 5		
D13	A · 6			D16	C · 5		
D14	B · 6			D17	C · 3		
D15	B · 5			D18	C · 3		
D16	C · 5			D19	C · 4		
D17	C · 3			D20	C · 5		
D18	C · 3			D21	D · 6		
D19	C · 4			D22	D · 6		
D20	C · 5			D200	C · 3		
D21	D · 6						
D22	D · 6			E1	D · 5		
D200	C · 3			E2	E · 3		
				E3	E · 1		
E1	D · 5			E4	C · 1		
E2	E · 3			E5	A · 2		
E3	E · 1			E6	B · 2		
E4	C · 1			E8	A · 6		
E5	A · 2			E9	B · 3		
E6	B · 2			E10	D · 4		
E8	A · 6						
E9	B · 3			IC1	A · 4		
E10	D · 4			IC2	A · 2		
				IC3	C · 6		
IC1	A · 4						
IC2	A · 2			L3	E · 3		
IC3	C · 6			L4	E · 2		
				L8	B · 2		
L3	E · 3			L18	C · 5		
L4	E · 2						
L8	B · 2			Q1	E · 6		
L18	C · 5			Q2	E · 6		
				Q3	E · 6		
Q1	E · 6			Q4	D · 5		
Q2	E · 6			Q5	E · 5		
Q3	E · 6			Q6	E · 5		
Q4	D · 5			Q7	D · 4		
Q5	E · 5			Q8	D · 3		
Q6	E · 5			Q9	E · 3		
Q7	D · 4			Q10	E · 2		
Q8	D · 3			Q11	E · 2		
Q9	E · 3			Q12	D · 2		
Q10	E · 2			Q13	D · 2		
Q11	E · 2			Q14	D · 1		
Q12	D · 2			Q15	D · 1		
Q13	D · 2			Q16	C · 2		
Q14	D · 1			Q17	C · 2		
Q15	D · 1			Q18	C · 1		
Q16	C · 2			Q19	C · 2		
Q17	C · 2			Q20	A · 3		
Q18	C · 1			Q21	A · 3		
Q19	C · 2			Q22	A · 2		
Q20	A · 3			Q23	B · 3		
Q21	A · 3			Q24	B · 4		
Q22	A · 2			Q25	D · 1		
Q23	B · 3			Q26	D · 1		
Q24	B · 4			Q27	D · 1		
Q25	D · 1			Q28	A · 5		
Q26	D · 1			Q29	A · 5		
Q27	D · 1			Q30	A · 5		
Q28	A · 5			Q31	A · 6		
Q29	A · 5			Q32	A · 6		
Q30	A · 5			Q33	B · 6		
Q31	A · 6			Q34	B · 6		
Q32	A · 6			Q35	B · 5		
Q33	B · 6			Q36	B · 4		
Q34	B · 6			Q37	B · 4		
Q35	B · 5			Q38	C · 3		
Q36	B · 4			Q39	D · 3		
Q37	B · 4			Q40	D · 3		
Q38	C · 3			Q41	C · 4		
Q39	D · 3			Q42	C · 4		
Q40	D · 3			Q43	C · 4		
Q41	C · 4			Q44	C · 5		
Q42	C · 4			Q45	C · 5		
Q43	C · 4			Q46	D · 5		
Q44	C · 5			Q200	D · 3		
Q45	C · 5						
Q46	D · 5						
Q200	D · 3						

MOD MOD

MOD BOARD

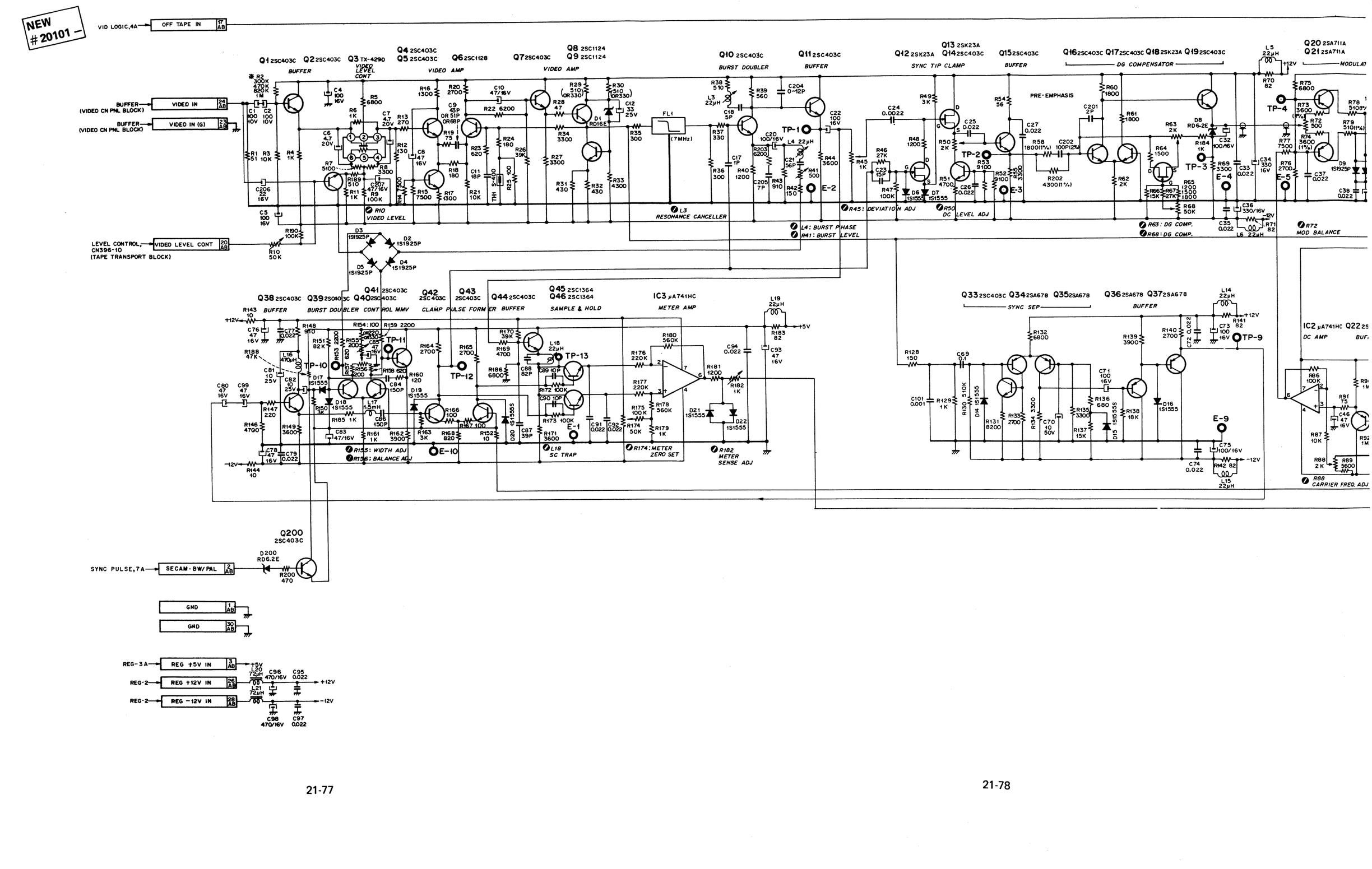

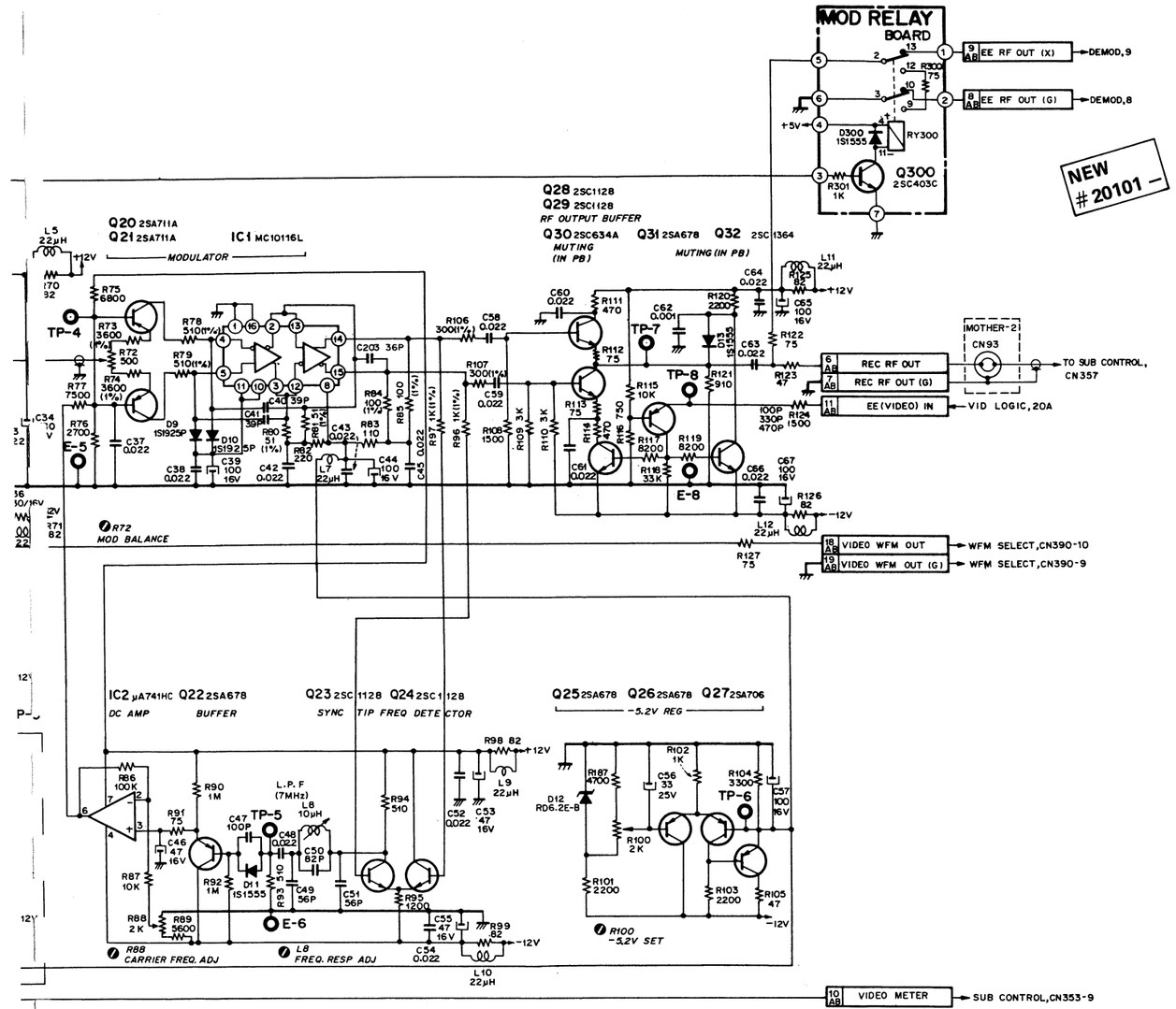

MOD (PS)

BOARD NO. : 1-603-998-11,12
BVH-1100APS : #20101–

MOTHER-1A MOTHER-1A

MOTHER-1A BOARD — *SOLDER SIDE* — **(REF. NO. 70,000)**

FORMER
NTSC; # 20001 – 20499
PS ; # 20001 – 20399

FORMER
NTSC; # 20001 – 20499
PS ; # 20001 – 20399

MOTHER-1A BOARD

BOARD NO. : 1-603-621-11
BVH-1100(NTSC): #20001 – 20499
BVH-1100APS : #20001 – 20399

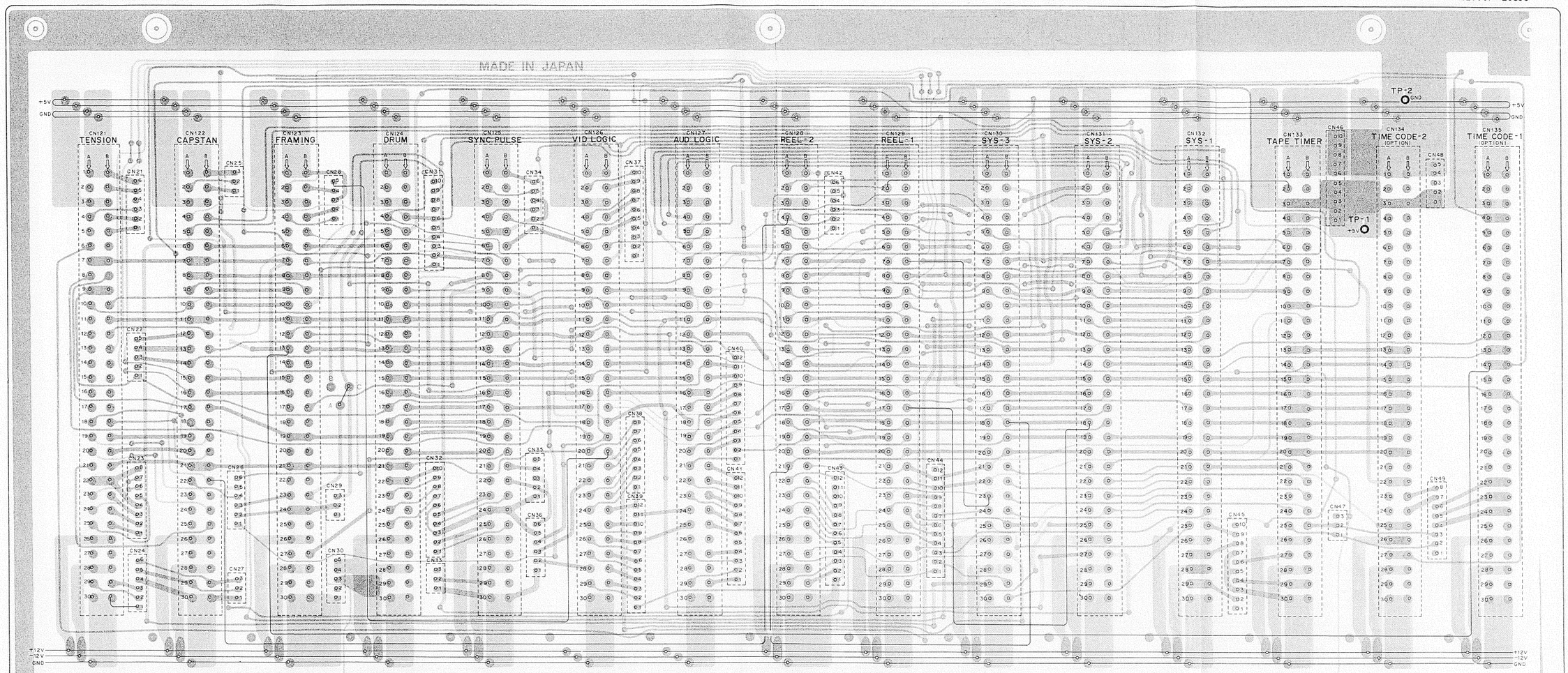

CN21

6	CN502-53
5	CN502-54
4	
3	CN502-52
2	CN502-51
1	CN502-50

CN22

5	CN81-3
4	CN81-2
3	CN69-6
2	
1	CN51-4

CN23

8	CN502-60
7	CN502-57
6	CN502-58
5	CN502-59
4	CN502-39
3	CN502-36
2	CN502-37
1	CN502-38

CN24

6	CN502-5
5	CN502-4
4	CN502-6
3	CN502-44
2	CN502-43
1	CN502-45

CN25

3	CN503-39
2	CN503-20
1	CN503-21

CN26

6	CN-501-34
5	CN-501-6
4	CN-501-21
3	CN-501-17
2	CN-501-18
1	CN-501-24

CN27

3	CN43-2
2	CN43-3
1	CN43-1

CN28

5	CN54 -12
4	CN502-22
3	CN502-48
2	CN502-47
1	CN502-46

CN29

3	CN504-16
2	CN504-29
1	

CN30

5	CN65-8
4	CN65-7
3	CN65-12
2	
1	CN65-3

CN31

10	CN55-7
9	CN55-6
8	CN55-3
7	CN55-2
6	CN51-8
5	CN55-1
4	CN51-12
3	CN64-6
2	CN60-5
1	CN70-3

CN32

10	CN502-21
9	CN502-18
8	CN502-19
7	CN502-20
6	CN502-42
5	CN502-40
4	CN502-41
3	CN502-3
2	CN502-1
1	CN502-2

CN33

3	
2	CN64-2
1	CN64-3

CN34

6	CN505-27
5	CN505-26
4	CN505-4
3	CN505-3
2	CN71-2
1	CN71-3

CN35

5	
4	CN505-21
3	CN505-22
2	CN505-13
1	CN505-14

CN36

6	CN508-13
5	CN508-14
4	CN508-15
3	CN508-7
2	CN508-6
1	CN508-16

CN37

10	CN51-6
9	CN51-3
8	CN69-3
7	CN55-10
6	CN51-7
5	CN51-2
4	
3	
2	CN55-9
1	CN55-8

CN38

8	CN64-9
7	CN69-2
6	CN51-5
5	CN64-7
4	CN60-3
3	CN60-4
2	CN69-1
1	CN51-10

CN39

12	CN503-23
11	CN503-9
10	CN503-6
9	CN503-47
8	CN503-48
7	CN503-42
6	CN503-5
5	CN503-4
4	CN503-22
3	CN503-44
2	CN503-43
1	CN503-8

CN40

12	CN86-4
11	CN64-1
10	CN78-4
9	CN88-2
8	CN86-8
7	CN88-1
6	CN86-5
5	CN86-6
4	CN78-2
3	CN88-3
2	CN69-4
1	CN86-7

CN41

12	CN86-12
11	CN82-2
10	CN86-3
9	CN86-11
8	CN78-1
7	CN81-1
6	CN82-3
5	
4	CN78-3
3	CN78-6
2	CN86-9
1	CN78-5

CN42

6	CN501-35
5	
4	
3	CN501-16
2	CN501-19
1	CN501-5

CN43

12	CN502-55
11	CN502-56
10	CN502-17
9	CN502-16
8	CN502-30
7	CN502-29
6	CN502-15
5	CN502-14
4	CN502-23
3	CN27-2
2	CN27-3
1	CN27-1

CN44

10	CN502-25
9	CN502-10
8	CN502-13
7	CN502-7
6	CN502-33
5	CN502-31
4	CN502-11
3	CN502-49
2	CN502-32
1	CN502-26
11	CN502-24
12	

CN45

10	
9	CN501-20
8	CN501-1
7	CN501-2
6	CN501-4
5	CN501-3
4	CN501-33
3	CN501-32
2	CN501-30
1	CN501-31

CN46

10	CN501-26
9	CN501-45
8	CN501-44
7	CN501-43
6	CN501-42
5	CN501-27
4	CN501-16
3	CN501-15
2	CN501-14
1	CN501-13

CN47

3	
2	CN502-9
1	CN502-8

CN48

5	CN59-5
4	CN59-4
3	
2	CN59-2
1	CN59-1

CN49

8	CN77-3
7	CN77-2
6	CN86-10
5	CN86-2
4	CN86-1
3	CN55-5
2	CN55-4
1	

CN501

1	SELECTED SIGNAL (X)	CN45-6
2	SELECTED SIGNAL (G)	CN45-7
3	TIMER SIGNAL (LOCAL) (G)	CN45-5
4	TIMER SIGNAL (LOCAL) (X)	CN45-6
5	SPEED VOLUME (LOCAL)	CN42-1
6	CAP VOL. (C)	CN26-5
7	POWER ON MUTING	CN83-7
8		
9	REG +12V (A)	CN83-5
10	REG +12V (B)	CN65-5
11	REG +12V (B)	CN65-6
12	+12V (B) SENSE	CN46-1
13	REG +5V (E)	CN46-2
14	REG +5V (E)	CN46-3
15	REG +5V (E)	CN46-4
16	CTL OUT-1 (X)	CN26-3
17	CTL OUT-1 (G)	CN26-2
18	SPEED VOLUME SELECT	CN42-2
19	THERMO ALARM	CN83-9
20	CAPSTAN VOLT (H)	CN26-4
21	DT OFF	CN83-8
22	GND (A)	CN83-1
23	PDM JOG ENABLE	CN26-1
24	GND (B) SENSE	CN65-2
25	GND (B)	CN65-1
26	+5V (E) SENSE	CN46-5
27	GND (E) SENSE	CN46-10
28	GND (E)	CN46-9
29	CHASSIS GND	CN45-2
30	CLOCK SW SIGNAL (X)	CN45-2
31	CLOCK SW SIGNAL (G)	CN45-1
32	TIMER SIGNAL (REMOTE) (G)	CN45-3
33	TIMER SIGNAL (REMOTE) (X)	CN45-4
34	SPEED VOLUM (REMOTE)	CN26-6
35	AC REFERENCE	CN42-6
36	POWER RESET	CN42-3
37		
38	REG -12V (A)	CN83-3
39	REG -12V (B)	CN65-9
40	REG -12V (B)	CN65-10
41	-12V (B) SENSE	CN65-11
42	GND (E)	CN46-6
43	GND (E)	CN46-7
44	GND (E)	CN46-8
45	GND (E)	CN46-9

TO POWER SUPPLY BLOCK

CN502

1	DRUM FG (X)	CN32-2
2	DRUM FG (Y)	CN32-3
3	DRUM FG (G)	CN32-1
4	CAPSTAN FG (X)	CN24-5
5	CAPSTAN FG (Y)	CN24-6
6	CAPSTAN FG (G)	CN24-4
7	REC TEST SW	CN44-7
8	PHOTO A	CN47-1
9	PHOTO B	CN47-2
10	T REEL FG	CN44-4
11	S REEL FG	CN44-3
12	PDM JOG PINCH	CN44-8
13	T REEL FG	CN28-5
14	STOP RELAY (X)	CN43-5
15	POWER SELECT	CN43-6
16	S TRIAC PULSE (X)	CN43-9
17	S TRIAC PULSE (G)	CN43-10
18	DRUM MOTOR (A)	CN32-9
19	DRUM MOTOR (B)	CN32-8
20	DRUM MOTOR (C)	CN32-7
21	DRUM MOTOR (G)	CN32-10
22	TRACKING CONTROL	CN28-4
23	STOP RELAY (G)	CN43-4
24	TENSION PINCH	CN44-10
25	CAPSTAN PINCH	CN44-11
26	REEL BRAKE 2	CN44-1
27	DRIVE (X)	CN52-4
28	DRIVE (G)	CN52-3
29	S DIRECTION	CN43-7
30	T DIRECTION	CN43-8
31	S ARM	CN44-5
32	HOURS METER STOP	CN44-2
33	T ARM	CN44-6
34	ST GAUGE (G)	CN52-1
35	ST GAUGE (X)	CN52-2
36	TENSION MOTOR (A)	CN23-3
37	TENSION MOTOR (B)	CN23-2
38	TENSION MOTOR (C)	CN23-1
39	TENSION MOTOR (G)	CN23-4
40	DRUM FG (X)	CN32-5
41	DRUM FG (Y)	CN32-6
42	DRUM FG (G)	CN32-4
43	TENSION FG (X)	CN24-2
44	TENSION FG (Y)	CN24-3
45	TENSION FG (G)	CN24-1
46	TRACKING VR (3)	CN28-1
47	TRACKING VR (2)	CN28-2
48	TRACKING VR (1)	CN28-3
49	OVER HEAT SENSE	CN44-3
50	TENSION DET (1)	CN21-3
51	TENSION DET (2)	CN21-2
52	TENSION DET (3)	CN21-1
53	TENSION DET (G)	CN21-6
54	TENSION DET (X)	CN21-5
55	T TRIAC PULSE (X)	CN43-12
56	T TRIAC PULSE (G)	CN43-11
57	CAPSTAN MOTOR (A)	CN23-7
58	CAPSTAN MOTOR (B)	CN23-6
59	CAPSTAN MOTOR (C)	CN23-5
60	CAPSTAN MOTOR (G)	CN23-8

TO TAPE TRANSPORT BLOCK

CN503

1		CN72-6
2		CN72-5
3		
4	REC VIDEO	CN39-5
5	ERASE VIDEO	CN39-6
6	PB MUTING	CN39-10
7	EQ CONTROL	CN72-4
8	REC INHIBIT SW	CN39-1
9	EE SELECT	CN39-11
10	VIDEO METER	CN63-1
11		
12	AUD 2 R/P HEAD (Y)	CN90-7
13	AUD 2 R/P HEAD (X)	CN90-8
14		
15	AUD 3 R/P HEAD (X)	CN90-2
16	AUD 3 ERASE HEAD (Y)	CN92-5
17	AUD 3 ERASE HEAD (X)	CN92-6
18	AUD 1 ERASE HEAD (Y)	CN87-9
19	AUD 1 ERASE HEAD (X)	CN87-10
20	CTL R/P HEAD (Y)	CN25-2
21	CTL R/P HEAD (X)	CN25-1
22	DT/EF SELECT	CN39-4
23	HEAD SELECT	CN39-12
24	V/S SELECT SIGNAL	CN72-2
25	RF SW PULSE	CN72-3
26		
27		
28		
29		
30		
31		
32	AUD 2 R/P HEAD (G)	CN90-9
33	AUD 1 R/P HEAD (G)	CN90-12
34	AUD 3 R/P HEAD (G)	CN90-3
35	AUD 3 R/P HEAD (Y)	CN90-1
36	AUD 1 ERASE HEAD (G)	CN92-4
37	AUD 2 ERASE HEAD (G)	CN87-7
38	AUD 1 ERASE HEAD (G)	CN87-8
39	CTL R/P HEAD (G)	CN25-3
40		CN63-3
41		CN63-2
42	PDM JOG ENABLE	CN39-7
43	REC SYNC	CN39-2
44	ERASE SYNC	CN39-3
45		
46		
47	REC RELAY	CN39-9
48	PB SELECT	CN39-8
49	PIF METER	CN72-1
50		
51		
52	AUD1 R/P HEAD (Y)	CN90-10
53	AUD1 R/P HEAD (X)	CN90-11
54		
55		
56	AUD 2 ERASE HEAD (Y)	CN87-6
57	AUD 2 ERASE HEAD (X)	CN87-5
58	FULL ERASE HEAD (X)	CN87-3
59	FULL ERASE HEAD (Y)	CN87-4
60	FULL ERASE HEAD (C)	CN87-1

MOTHER-1A BOARD – *SOLDER SIDE* – (REF. NO. 70,000)

NEW
NTSC; # 20501 –
PS ; # 20401 –

MOTHER-1A MOTHER-1A

NEW
NTSC; # 20501 –
PS ; # 20401 –

MOTHER-1A BOARD
BOARD NO.: 1-603-621-12
BVH-1100A(NTSC): # 20501-
BVH-1100 APS : # 20401-
BVH-1100 APM : # 20001-

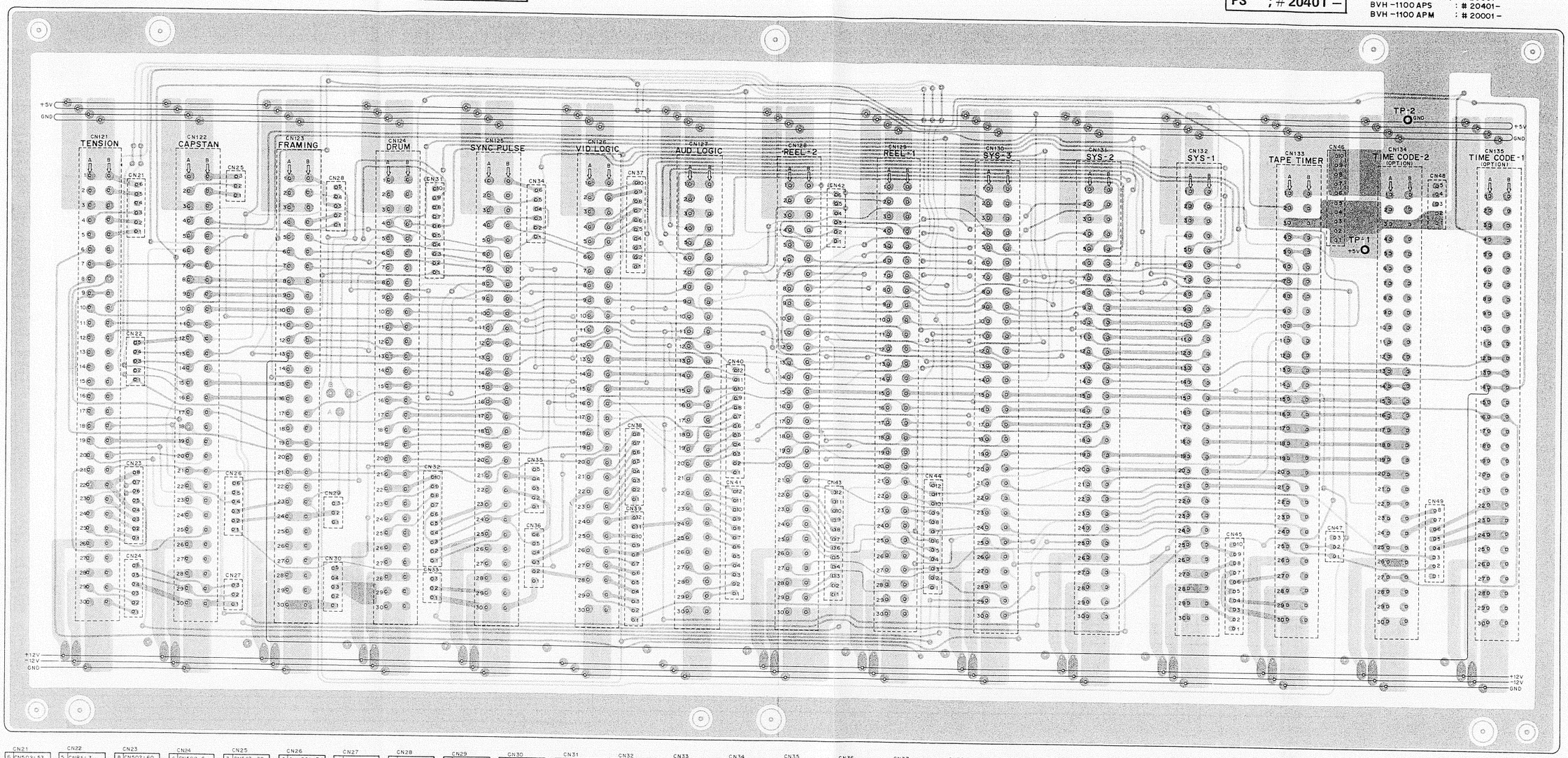

CN21
6	CN502-53
5	CN502-54
4	
3	CN502-52
2	CN502-51
1	CN502-50

CN22
5	CN81-3
4	CN81-2
3	CN69-6
2	
1	CN51-4

CN23
8	CN502-60
7	CN502-57
6	CN502-58
5	CN502-59
4	CN502-39
3	CN502-36
2	CN502-37
1	CN502-38

CN24
6	CN502-5
5	CN502-4
4	CN502-6
3	CN502-44
2	CN502-43
1	CN502-45

CN25
3	CN503-39
2	CN503-20
1	CN503-21

CN26
6	CN-501-34
5	CN-501-6
4	CN-501-21
3	CN-501-17
2	CN-501-18
1	CN-501-24

CN27
3	CN43-2
2	CN43-3
1	CN43-1

CN28
5	CN54 -12
4	CN502-22
3	CN502-48
2	CN502-47
1	CN502-46

CN29
3	CN504-16
2	CN504-29
1	

CN30
5	CN65-8
4	CN65-7
3	CN65-12
2	
1	CN65-3

CN31
10	CN55-7
9	CN55-6
8	CN55-3
7	CN55-2
6	CN51-8
5	CN55-1
4	CN51-12
3	CN64-6
2	CN60-5
1	CN70-3

CN32
10	CN502-21
9	CN502-18
8	CN502-19
7	CN502-20
6	CN502-42
5	CN502-40
4	CN502-41
3	CN502-3
2	CN502-1
1	CN502-2

CN33
3	
2	CN64-2
1	CN64-3

CN34
6	CN505-27
5	CN505-26
4	CN505-4
3	CN505-3
2	CN71-2
1	CN71-3

CN35
5	
4	CN505-21
3	CN505-22
2	CN505-13
1	CN505-14

CN36
6	CN508-13
5	CN508-14
4	CN508-15
3	CN508-7
2	CN508-6
1	CN508-16

CN37
10	CN51-6
9	CN51-3
8	CN69-3
7	CN55-10
6	CN51-7
5	CN51-2
4	
3	
2	CN55-9
1	CN55-8

CN38
8	CN64-9
7	CN69-2
6	CN51-5
5	CN64-7
4	CN60-3
3	CN60-4
2	CN69-1
1	CN51-10

CN39
12	CN503-23
11	CN503-9
10	CN503-6
9	CN503-47
8	CN503-48
7	CN503-42
6	CN503-5
5	CN503-4
4	CN503-22
3	CN503-44
2	CN503-43
1	CN503-8

CN40
12	CN86-4
11	CN64-1
10	CN78-4
9	CN88-2
8	CN86-8
7	CN88-1
6	CN86-5
5	CN86-6
4	CN78-2
3	CN88-3
2	CN69-4
1	CN86-7

CN41
12	CN86-12
11	CN82-2
10	CN86-3
9	CN86-11
8	CN78-1
7	CN81-1
6	CN82-3
5	
4	CN78-3
3	CN78-6
2	CN86-9
1	CN78-5

CN42
6	CN501-35
5	
4	
3	CN501-36
2	CN501-19
1	CN501-5

CN43
12	CN502-55
11	CN502-56
10	CN502-17
9	CN502-16
8	CN502-30
7	CN502-29
6	CN502-15
5	CN502-14
4	CN502-23
3	CN27-2
2	CN27-3
1	CN27-1

CN44
10	CN502-25
9	CN502-10
8	CN502-13
7	CN502- 7
6	CN502-33
5	CN502-31
4	CN502-11
3	CN502-49
2	CN502-32
1	CN502-26
11	CN502-24
12	

CN45
10	
9	CN501-20
8	CN501-1
7	CN501-2
6	CN501-4
5	CN501-3
4	CN501-33
3	CN501-32
2	CN501-30
1	CN501-31

CN46
10	CN501-28
9	CN501-45
8	CN501-44
7	CN501-43
6	CN501-42
5	CN501-27
4	CN501-16
3	CN501-15
2	CN501-14
1	CN501-13

CN47
3	
2	CN502-9
1	CN502-8

CN48
5	CN59-5
4	CN59-4
3	
2	CN59-2
1	CN59-1

CN49
8	CN77-3
7	CN77-2
6	CN86-10
5	CN86-2
4	CN86-1
3	CN55-5
2	CN55-4
1	

CN501
1	SELECTED SIGNAL (X)	CN45-8
2	SELECTED SIGNAL (G)	CN45-7
3	TIMER SIGNAL (LOCAL) (G)	CN45-5
4	TIMER SIGNAL (LOCAL) (X)	CN45-6
5	SPEED VOLUME (LOCAL)	CN42-1
6	CAP VOL (G)	CN26-5
7	POWER ON MUTING	CN83-7
8	REG +12V (A)	CN83-5
9	REG +12V (B)	CN45-9
10	REG +12V (B)	CN65-5
11	+12V (B) SENSE	CN45-6
12	REG +5V (E)	CN46-1
13	REG +5V (E)	CN46-2
14	REG +5V (E)	CN46-3
15	REG +5V (E)	CN46-4
16	REG +5V (E)	CN46-5
17	CTL OUT-1 (X)	CN26-3
18	CTL OUT-1 (G)	CN26-2
19	SPEED VOLUME SELECT	CN42-2
20	THERMO ALARM	CN45-9
21	CAPSTAN VOLT (H)	CN26-4
22	DT OPT	CN83-8
23	GND (A)	CN83-1
24	PGM JOG ENABLE	CN26-1
25	GND (E) SENSE	CN46-9
26	+5V (E) SENSE	CN46-5
27	+5V (E) SENSE	CN46-10
28	GND (E) SENSE	CN46-10
29	CHASSIS GND	A MB-1
30	CLOCK SW SIGNAL (X)	CN45-2
31	CLOCK SW SIGNAL (G)	CN45-1
32	TIMER SIGNAL (REMOTE) (G)	CN45-3
33	TIMER SIGNAL (REMOTE) (X)	CN45-4
34	SPEED VOLUM (REMOTE)	CN26-6
35	+C REFERENCE	CN42-6
36	POWER RESET	CN42-3
37		
38	REG –12V (A)	CN83-3
39	REG –12V (B)	CN65-3
40	REG –12V (B)	CN45-10
41	–12V (B) SENSE	CN46-11
42	GND (E)	CN46-6
43	GND (E)	CN46-7
44	GND (E)	CN46-8
45	GND (E)	CN46-9

TO POWER SUPPLY BLOCK

CN502
1	DRUM FG (X)	CN32-2
2	DRUM FG (Y)	CN32-3
3	DRUM FG (G)	CN32-1
4	CAPSTAN FG (X)	CN24-5
5	CAPSTAN FG (Y)	CN24-6
6	CAPSTAN FG (G)	CN24-4
7	REC TEST SW	CN44-7
8	PHOTO A	CN47-1
9	PHOTO B	CN47-2
10	TAPE SENSE	CN44-9
11	S REEL FG	CN44-4
12	PGM JOG PINCH	CN29-5
13	T REEL FG	CN44-8
14	STOP RELAY (X)	CN43-5
15	POWER SELECT	CN43-6
16	S TRIAC PULSE (X)	CN43-9
17	S TRIAC PULSE (G)	CN43-10
18	DRUM MOTOR (A)	CN32-9
19	DRUM MOTOR (B)	CN32-8
20	DRUM MOTOR (C)	CN32-7
21	DRUM MOTOR (D)	CN32-10
22	T REEL SERVO CONTROL	CN28-4
23	STOP RELAY (G)	CN44-3
24	TENTION PINCH	CN44-10
25	CAPSTAN PINCH	CN44-11
26	REEL BRAKE-2	CN44-1
27	DRIVE (G)	CN52-4
28	DRIVE (X)	CN52-5
29	S DIRECTION	CN43-7
30	T DIRECTION	CN43-8
31	S ARM	CN44-5
32	HOURS METER STOP	CN44-2
33	T ARM	CN44-6
34	ST GAUGE (G)	CN52-1
35	ST GAUGE (X)	CN52-2
36	TENSION MOTOR (A)	CN23-2
37	TENSION MOTOR (B)	CN23-1
38	TENSION MOTOR (C)	CN23-4
39	TENSION MOTOR (D)	CN23-3
40	DRUM FG (X) (REMOTE)	CN32-5
41	DRUM FG (Y)	CN32-4
42	DRUM FG (G)	CN32-6
43	TENSION FG (X)	CN24-2
44	TENSION FG (Y)	CN24-3
45	TENSION FG (G)	CN24-1
46	TRACKING VR (3)	CN28-1
47	TRACKING VR (2)	CN28-2
48	TRACKING VR (1)	CN28-3
49	OVER HEAT SENSE	CN44-3
50	TENSION DET (1)	CN21-3
51	TENSION DET (2)	CN21-2
52	TENSION DET (3)	CN21-1
53	TENSION DET (4)	CN21-6
54	TENSION DET (X)	CN27-1
55	T TRIAC PULSE (X)	CN43-12
56	T TRIAC PULSE (G)	CN43-11
57	CAPSTAN MOTOR (A)	CN23-7
58	CAPSTAN MOTOR (B)	CN23-6
59	CAPSTAN MOTOR (C)	CN23-5
60	CAPSTAN MOTOR (G)	CN23-8

TO TAPE TRANSPORT BLOCK

CN503
1		CN72-6
2		CN72-5
3		
4	REC VIDEO	CN39-5
5	ERASE VIDEO	CN39-6
6	FG CONTROL	CN39-10
7	FG MUTING	CN39-12
8	REC INHIBIT SW	CN39-4
9	EE SELECT	CN39-11
10	VIDEO METER	CN63-1
11		
12	AUD 2 R/P HEAD (Y)	CN90-7
13	AUD 2 R/P HEAD (X)	CN90-8
14		
15	AUD 3 R/P HEAD (X)	CN90-2
16	AUD 3 ERASE HEAD (Y)	CN92-5
17	AUD 3 ERASE HEAD (X)	CN92-6
18	AUD 1 ERASE HEAD (X)	CN87-9
19	AUD 1 ERASE HEAD (Y)	CN87-10
20	CTL R/P HEAD (X)	CN25-2
21	CTL R/P HEAD (Y)	CN39-1
22	DTF SELECT	CN72-4
23	HEAD SELECT	CN72-3
24	AV/S SELECT SIGNAL	CN72-1
25	RF SW PULSE	CN72-2
26		
27		
28		
29		
30		
31	AUD 2 R/P HEAD (G)	CN90-9
32	AUD 1 R/P HEAD (G)	CN90-12
33	AUD 3 R/P HEAD (Y)	CN90-1
34	AUD 3 ERASE HEAD (G)	CN92-4
35	AUD 2 ERASE HEAD (G)	CN87-7
36	AUD 1 ERASE HEAD (G)	CN87-8
37	CTL R/P HEAD (G)	CN25-3
38	CTL	CN63-2
39		CN63-4
40	PGM JOG ENABLE	CN39-7
41	REC SYNC	CN39-2
42	ERASE SYNC	CN39-3
43		
44		
45		
46		
47	REC RELAY	CN39-9
48	PB SELECT	CN39-8
49	RF METER	CN72-1
50		
51		
52	AUD1 R/P HEAD (Y)	CN90-10
53	AUD1 R/P HEAD (X)	CN90-11
54		
55		
56	AUD 2 ERASE HEAD (Y)	CN87-6
57	AUD 2 ERASE HEAD (X)	CN87-5
58	FULL ERASE HEAD (X)	CN87-3
59	FULL ERASE HEAD (Y)	CN87-2
60	FULL ERASE HEAD (G)	CN87-1

MOTHER-2 BOARD – *SOLDER SIDE* – **(REF. NO. 70,000)**

MOTHER-2 BOARD
BOARD NO. : 1-600-112-12
BVH-1100A(NTSC) : # 20001-
BVH-1100APS : # 20001-
BVH-1100APM : # 20001-

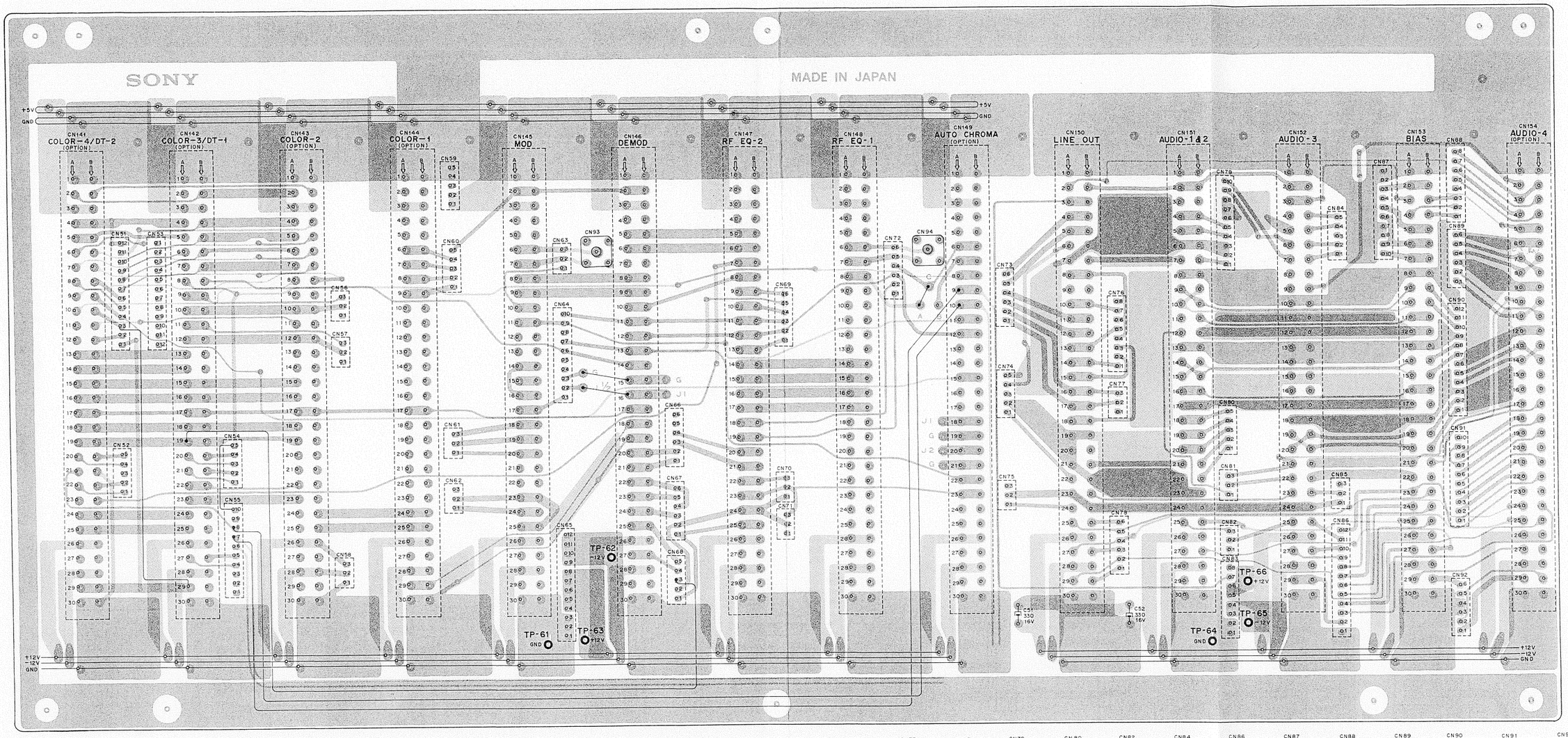

CN51

12	CN31-4
11	CN64-10
10	CN38-1
9	CN69-5
8	CN31-6
7	CN37-6
6	CN37-10
5	CN38-6
4	CN22-1
3	CN37-9
2	CN37-5
1	CN82-1

CN52

5	CN502-28
4	CN502-27
3	
2	CN502-35
1	CN502-34

CN53

1	
2	
3	
4	
5	
6	
7	
8	
9	
10	
11	
12	

CN54

5	CN508-5
4	CN508-2
3	CN508-10
2	CN508-4
1	CN508-12

CN55

10	CN37-7
9	CN37-2
8	CN37-1
7	CN31-10
6	CN31-9
5	CN49-3
4	CN49-2
3	CN31-8
2	CN31-7
1	CN31-5

CN56

3	CN504-15
2	CN504-14
1	

CN57

3	CN505-9
2	CN505-10
1	

CN58

3	CN505-28
2	CN505-17
1	CN505-18

CN59

5	CN48-5
4	CN48-4
3	
2	CN48-2
1	CN48-1

CN60

5	CN31-2
4	CN38-3
3	CN38-4
2	CN70-2
1	CN70-1

CN61

3	CN504-43
2	CN504-42
1	CN504-6

CN62

3	
2	CN505-2
1	CN505-1

CN63

3	
2	
1	CN503-10

CN64

10	CN51-11
9	CN38-8
8	
7	CN38-5
6	CN31-3
5	
4	
3	CN33-1
2	CN33-2
1	CN40-11

CN65

12	CN30-3
11	CN501-41
10	CN501-40
9	CN501-39
8	CN30-5
7	CN30-4
6	CN501-12
5	CN501-11
4	CN501-10
3	CN30-1
2	CN501-25
1	CN501-26

CN66

6	
5	
4	CN504-13
3	CN504-12
2	CN504-45
1	CN504-44

CN67

6	CN505-24
5	CN505-23
4	CN505-6
3	CN505-5
2	CN505-8
1	CN505-7

CN68

5	CN508-9
4	CN508-1
3	CN508-8
2	CN508-11
1	CN508-3

CN69

6	CN22-3
5	CN51-9
4	CN40-2
3	CN37-8
2	CN38-7
1	CN38-2

CN70

3	CN31-1
2	CN60-2
1	CN60-1

CN71

3	CN34-1
2	CN34-2
1	

CN72

6	
5	
4	CN503-7
3	CN503-25
2	CN503-24
1	CN503-49

CN73

6	CN504-1
5	CN504-2
4	CN504-30
3	CN504-31
2	CN504-17
1	CN504-3

CN74

5	CN88-8
4	CN88-7
3	
2	CN88-6
1	CN88-5

CN75

3	
2	CN91-9
1	CN91-8

CN76

8	CN504-33
7	CN504-32
6	CN504-4
5	CN504-18
4	CN504-34
3	CN504-35
2	CN507-2
1	CN507-6

CN77

3	CN49-8
2	CN49-7
1	

CN78

6	CN41-3
5	CN41-1
4	CN40-10
3	CN41-4
2	CN40-4
1	CN41-8

CN79

10	CN504-38
9	CN504-39
8	CN504-24
7	
6	
5	CN504-41
4	CN504-40
3	CN504-26
2	CN504-37
1	CN504-36

CN80

5	CN504-11
4	CN504-10
3	CN504-25
2	CN504-9
1	CN504-23

CN81

3	CN22-5
2	CN22-4
1	CN41-7

CN82

3	CN41-6
2	CN41-11
1	CN51-1

CN83

8	CN501-22
7	CN501-7
6	
5	CN501-9
4	
3	CN501-38
2	
1	CN501-23

CN84

5	CN504-19
4	CN504-5
3	
2	CN504-21
1	CN504-7

CN85

3	
2	CN504-8
1	CN504-22

CN86

12	CN41-12
11	CN41-9
10	CN49-6
9	CN41-2
8	CN40-8
7	CN40-1
6	CN40-5
5	CN40-6
4	CN40-12
3	CN41-10
2	CN49-5
1	CN49-4

CN87

1	CN503-60
2	CN503-59
3	CN503-58
4	
5	CN503-57
6	CN503-56
7	CN503-37
8	CN503-38
9	CN503-18
10	CN503-19

CN88

8	CN74-5
7	CN74-4
6	CN74-2
5	CN74-1
4	
3	CN40-3
2	CN40-9
1	CN40-7

CN89

6	CN506-5
5	CN506-12
4	CN506-6
3	CN506-2
2	CN506-9
1	CN506-3

CN90

12	CN503-33
11	CN503-53
10	CN503-52
9	CN503-32
8	CN503-13
7	CN503-12
6	CN506-8
5	CN506-1
4	CN506-7
3	CN503-34
2	CN503-15
1	CN503-35

CN91

10	
9	CN75-2
8	CN75-1
7	CN507-5
6	CN507-6
5	CN507-12
4	CN507-9
3	CN507-3
2	CN507-7
1	CN507-1

CN92

6	CN503-17
5	CN503-16
4	CN503-36
3	CN506-11
2	CN506-10
1	CN506-4

CN504

1	AUD1 OUT (X)	CN73-6
2	AUD1 OUT (Y)	CN73-5
3	AUD3 OUT (Y)	CN73-1
4	AUD 2 METER (G)	CN76-6
5	AUD 3 MIC IN	CN84-4
6	VIDEO LEVEL CONTROL	CN61-6
7	AUD 3 MIC OUT	CN84-1
8	AUD 3 REC VR (2)	CN85-2
9	AUD 2 REC VR (2)	CN80-2
10	AUD 2 PB VR (2)	CN80-4
11	AUD 2 PB WPM (G)	CN66-3
12	RF ENV WPM (X)	CN66-4
13	COLOR OUT-1 (X)	CN56-2
14	COLOR OUT-1 (G)	CN56-3
15	CTL OUT-2 (X)	CN29-3
16	AUD 3 OUT (X)	CN73-2
17	AUD 2 METER	CN76-5
18	AUD 3 MIC IN (G)	CN84-2
19	CHASSIS GND	A MB-2
20	AUD 3 MIC OUT (G)	CN84-5
21	AUD 3 REC VR (1)	CN85-1
22	AUD 2 REC VR (1)	CN80-1
23	AUD 2 PB VR (1)	CN79-8
24	AUD 3 PB VR (1)	CN80-3
25	AUD 2 PB VR (1)	CN79-3
26	AUD 1 PB VR (1)	CN79-3
27		
28	CTL OUT-2 (G)	CN29-2
29	AUD 2 OUT (X)	CN73-4
30	AUD 2 OUT (Y)	CN73-3
31	AUD 1 METER (X)	CN76-7
32	AUD 1 METER (G)	CN76-8
33	AUD 3 METER (G)	CN76-4
34	AUD 3 METER (X)	CN76-3
35	AUD 1 REC VR (2)	CN79-1
36	AUD 1 REC VR (1)	CN79-2
37	AUD 3 PB VR (3)	CN79-10
38	AUD 3 PB VR (2)	CN79-9
39	AUD 1 PB VR (2)	CN79-4
40	AUD 1 PB VR (3)	CN79-5
41	VIDEO (X)	CN61-1
42	VIDEO (G)	CN61-5
43	VIDEO OUT-3 (G)	CN66-1
44	VIDEO OUT-3 (X)	CN66-2
45		

TO TAPE TRANSPORT BLOCK

CN505

1	VIDEO 50Ω (X)	CN62-1
2	VIDEO 50Ω (Y)	CN62-2
3	EXT REF VIDEO (X)	CN34-3
4	EXT REF VIDEO (G)	CN34-4
5	VIDEO OUT-1 (X)	CN67-3
6	VIDEO OUT-1 (G)	CN67-4
7	DO PULSE-1 (X)	CN67-1
8	DO PULSE-1 (G)	CN67-2
9	COLOR OUT-2 (X)	CN57-1
10	COLOR OUT-2 (G)	CN57-2
11		
12	FR PULSE (X)	CN35-2
13	FR PULSE (G)	CN35-1
14		
15		
16	REG -12V (B)	CN58-2
17	GND	CN58-1
18		
19		
20		
21	PB SYNC-1 (X)	CN35-4
22	PB SYNC-1 (G)	CN35-3
23	VIDEO OUT-2 (X)	CN67-5
24	VIDEO OUT-2 (G)	CN67-6
25		
26	VIDEO 75Ω (X)	CN34-5
27	VIDEO 75Ω (G)	CN34-6
28	REG +12V (B)	CN58-3

TO POWER SUPPLY BLOCK

CN506

1	AUD 4 R/P HEAD (X)	CN90-5
2	CTL CAN SIG (G)	CN69-3
3	AUD 2 CONFI (Y)	CN69-1
4	AUD 4 ERASE HEAD (X)	CN92-1
5	AUD1 CONFI (G)	CN89-6
6	AUD1 CONFI (Y)	CN89-4
7	AUD 4 R/P HEAD (G)	CN90-4
8	AUD 4 R/P HEAD (G)	CN90-6
9	AUD 2 CONFI (X)	CN69-2
10	AUD 4 ERASE HEAD (Y)	CN92-2
11	AUD 4 ERASE HEAD (G)	CN92-3
12	AUD 1 CONFI (X)	CN89-5

CN507

1	AUD 4 OUT (X)	CN91-9
2	SELECTED LINE (Y)	CN76-2
3	AUD 4 REC VR (2)	CN91-3
4		
5	AUD 4 PB VR (1)	CN91-7
6	AUD 4 PB VR (2)	CN91-6
7	AUD 4 OUT (Y)	CN91-2
8	SELECTED LINE (X)	CN76-1
9	AUD 4 REC VR (1)	CN91-4
10		
11		
12	AUD 4 PB VR (3)	CN91-5

TO TAPE TRANSPORT BLOCK

CN508

1	VIDEO OUT 50Ω (X)	CN68-4
2	DT V (X)	CN54-4
3	DO PULSE-1 (X)	CN68-1
4	FH (X)	CN54-2
5	DT MODE	CN54-5
6	OFF TAPE	CN36-3
7	PLAY STATUS	CN36-2
8	C INF	CN69-5
9	VIDEO OUT 50Ω (G)	CN68-3
10	DT V (G)	CN54-3
11	DO PULSE-1 (G)	CN68-2
12	FH (G)	CN54-1
13	FR PULSE (X)	CN36-6
14	FR PULSE (G)	CN36-5
15	CONFI	CN36-4
16	GND	CN36-1

TO VIDEO CN PANEL BLOCK

MPA-A BOARD — *COMPONENT SIDE* —

FORMER
NTSC; # 20001 – 20299
PS ; # 20001 – 20199

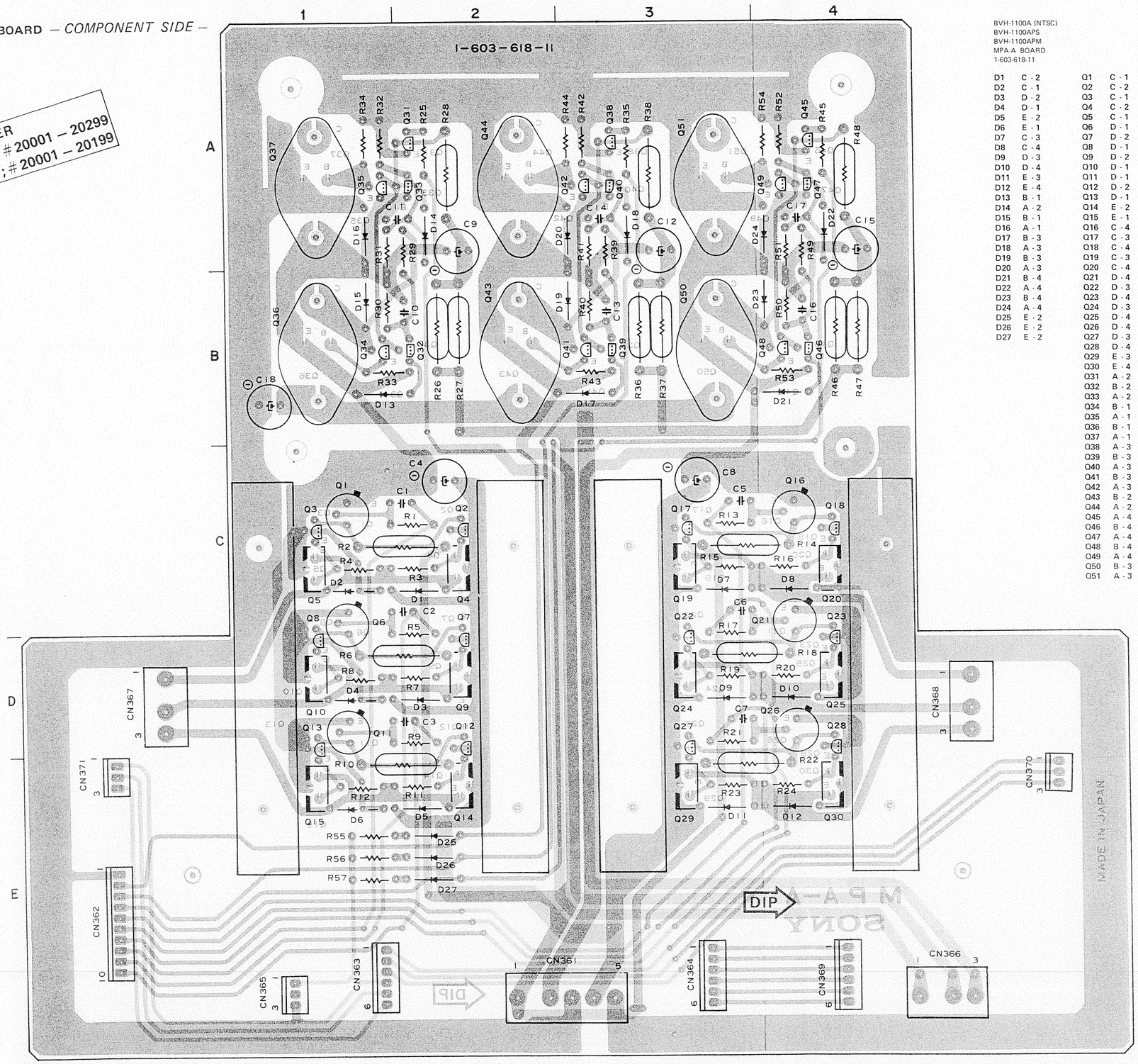

BVH-1100A (NTSC)
BVH-1100APS
BVH-1100APM
MPA-A BOARD
1-603-618-11

D1	C - 2	Q1	C - 1
D2	C - 1	Q2	C - 2
D3	D - 2	Q3	C - 1
D4	D - 1	Q4	C - 2
D5	E - 2	Q5	C - 1
D6	E - 1	Q6	D - 1
D7	C - 3	Q7	D - 2
D8	C - 4	Q8	D - 1
D9	D - 3	Q9	D - 2
D10	D - 4	Q10	D - 1
D11	E - 3	Q11	D - 1
D12	E - 4	Q12	D - 2
D13	B - 1	Q13	D - 1
D14	A - 2	Q14	E - 2
D15	B - 1	Q15	E - 1
D16	A - 1	Q16	C - 4
D17	B - 3	Q17	C - 3
D18	A - 3	Q18	C - 4
D19	B - 3	Q19	C - 3
D20	A - 3	Q20	C - 4
D21	B - 4	Q21	D - 4
D22	A - 4	Q22	D - 3
D23	B - 4	Q23	D - 4
D24	A - 4	Q24	D - 3
D25	E - 2	Q25	D - 4
D26	E - 2	Q26	D - 4
D27	E - 2	Q27	D - 3
		Q28	D - 4
		Q29	E - 3
		Q30	E - 4
		Q31	A - 2
		Q32	B - 2
		Q33	A - 2
		Q34	B - 1
		Q35	A - 1
		Q36	B - 1
		Q37	A - 1
		Q38	A - 3
		Q39	B - 3
		Q40	A - 3
		Q41	B - 3
		Q42	A - 3
		Q43	B - 2
		Q44	A - 2
		Q45	A - 4
		Q46	B - 4
		Q47	A - 4
		Q48	B - 4
		Q49	A - 4
		Q50	B - 3
		Q51	A - 3

MPA-A BOARD — *COMPONENT SIDE* —

NEW
NTSC; # 20301 –
PS ; # 20201 –

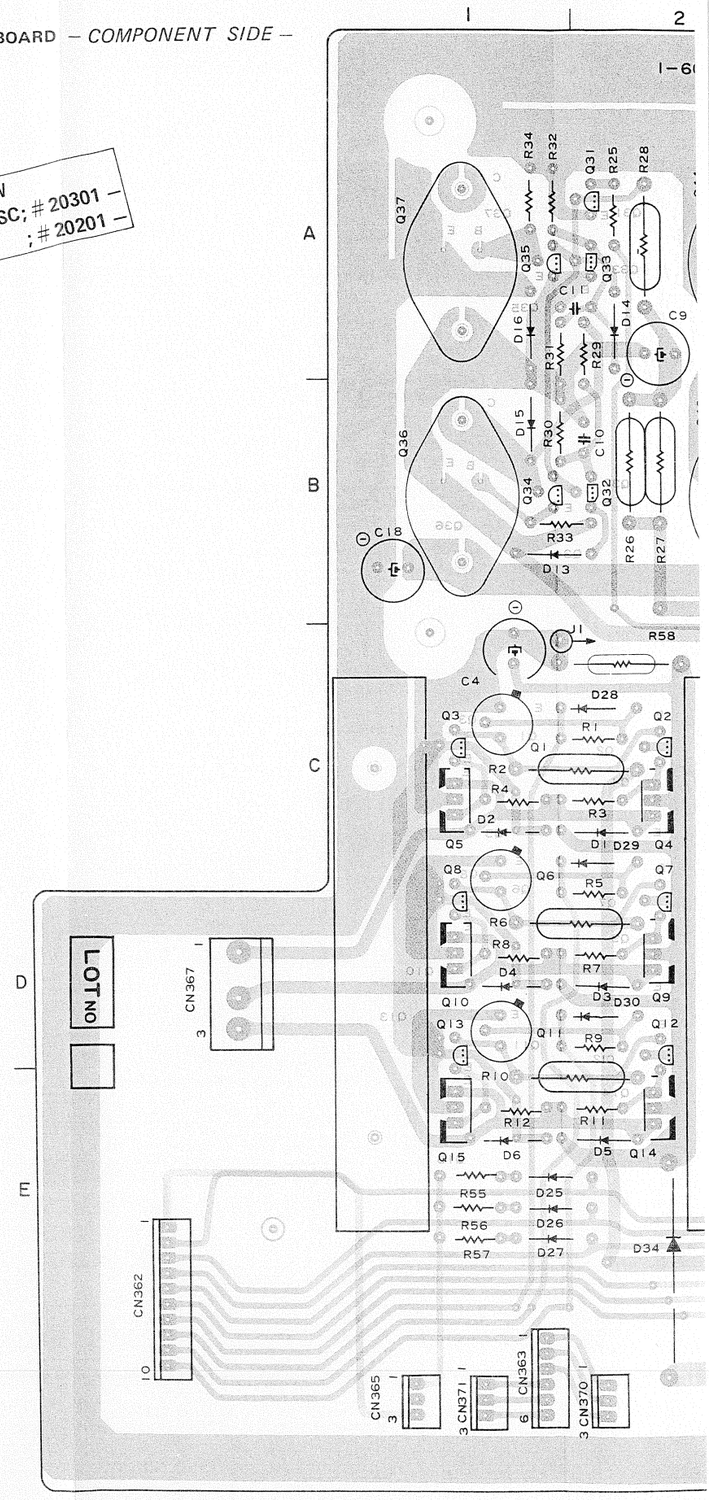

MPA-A MPA-A

BVH-1100A (NTSC)
BVH-1100APS
BVH-1100APM
MPA-A BOARD
1-603-618-11

D1	C - 2	Q1	C - 1
D2	C - 1	Q2	C - 2
D3	D - 2	Q3	C - 1
D4	D - 1	Q4	C - 2
D5	E - 2	Q5	C - 1
D6	E - 1	Q6	D - 1
D7	C - 3	Q7	D - 2
D8	C - 4	Q8	D - 1
D9	D - 3	Q9	D - 2
D10	D - 4	Q10	D - 1
D11	E - 3	Q11	D - 1
D12	E - 4	Q12	D - 2
D13	B - 1	Q13	D - 1
D14	A - 2	Q14	E - 2
D15	B - 1	Q15	E - 1
D16	A - 1	Q16	C - 4
D17	B - 3	Q17	C - 3
D18	A - 3	Q18	C - 4
D19	B - 3	Q19	C - 3
D20	A - 3	Q20	C - 4
D21	B - 4	Q21	D - 4
D22	A - 4	Q22	D - 3
D23	B - 4	Q23	D - 4
D24	A - 4	Q24	D - 3
D25	E - 2	Q25	D - 4
D26	E - 2	Q26	D - 4
D27	E - 2	Q27	D - 3
		Q28	D - 4
		Q29	E - 3
		Q30	E - 4
		Q31	A - 2
		Q32	B - 2
		Q33	A - 2
		Q34	B - 1
		Q35	A - 1
		Q36	B - 1
		Q37	A - 1
		Q38	A - 3
		Q39	B - 3
		Q40	A - 3
		Q41	B - 3
		Q42	A - 3
		Q43	B - 2
		Q44	A - 2
		Q45	A - 4
		Q46	B - 4
		Q47	A - 4
		Q48	B - 4
		Q49	A - 4
		Q50	B - 3
		Q51	A - 3

NEW
NTSC; # 20301 –
PS ; # 20201 –

MPA-A BOARD — *COMPONENT SIDE* —

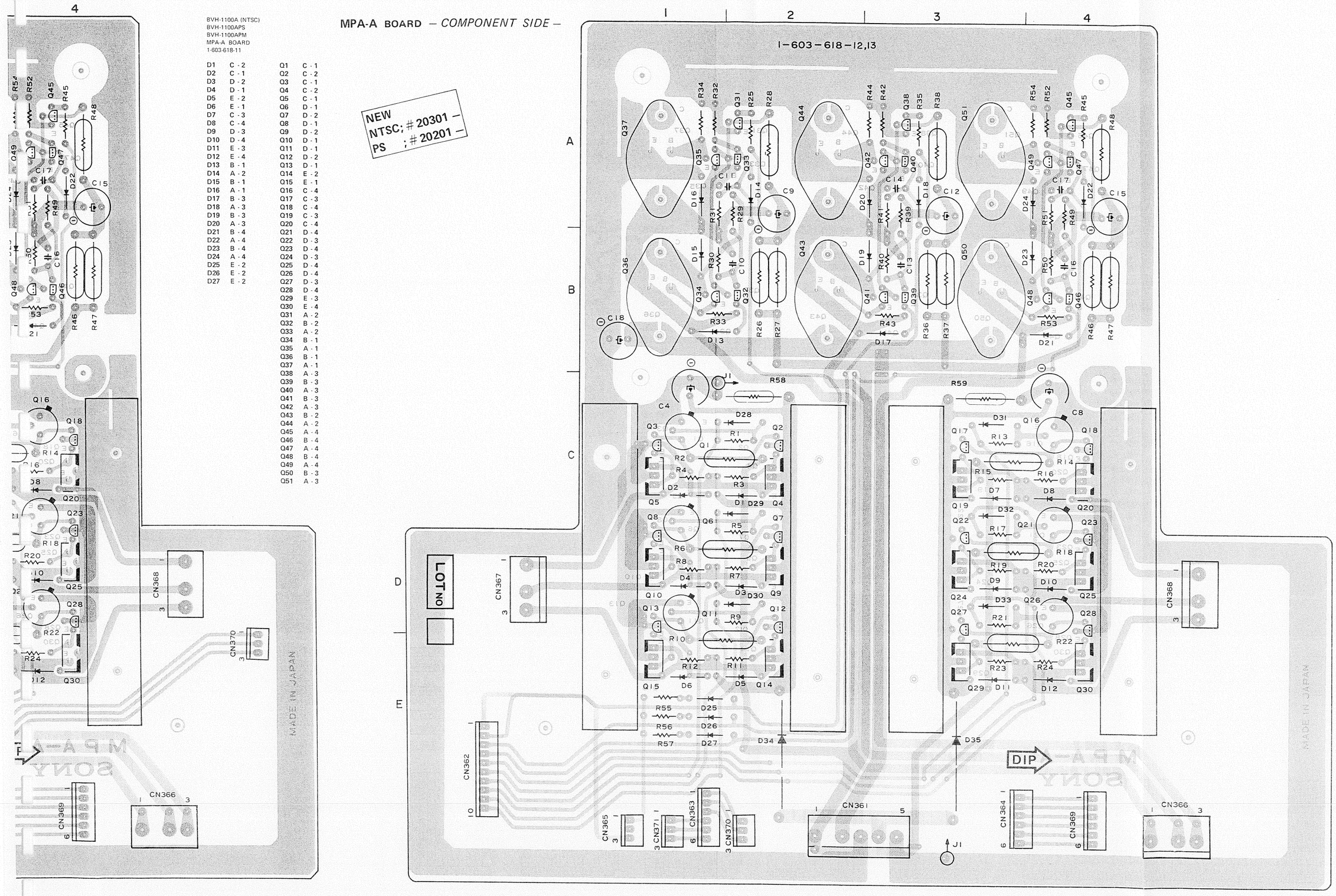

BVH-1100A (NTSC)
BVH-1100APS
BVH-1100APM
MPA-A BOARD
1-603-618-12, 13

D1	C - 2	Q1	C - 1
D2	C - 1	Q2	C - 2
D3	D - 2	Q3	C - 1
D4	D - 1	Q4	C - 2
D5	E - 2	Q5	C - 1
D6	E - 1	Q6	D - 1
D7	C - 3	Q7	C - 2
D8	C - 4	Q8	C - 1
D9	D - 3	Q9	D - 2
D10	D - 4	Q10	D - 1
D11	E - 3	Q11	D - 1
D12	E - 4	Q12	D - 2
D13	B - 1	Q13	D - 1
D14	A - 2	Q14	E - 2
D15	B - 1	Q15	E - 1
D16	A - 1	Q16	C - 4
D17	B - 3	Q17	C - 3
D18	A - 3	Q18	C - 4
D19	B - 3	Q19	C - 3
D20	A - 3	Q20	C - 4
D21	B - 4	Q21	C - 4
D22	A - 4	Q22	C - 3
D23	B - 4	Q23	C - 4
D24	A - 4	Q24	D - 3
D25	E - 1	Q25	D - 4
D26	E - 1	Q26	D - 4
D27	E - 1	Q27	D - 3
D28	C - 2	Q28	D - 4
D29	C - 2	Q29	E - 3
D30	D - 2	Q30	E - 4
D31	C - 3	Q31	A - 2
D32	C - 3	Q32	B - 2
D33	D - 3	Q33	A - 2
D34	E - 2	Q34	B - 1
D35	E - 3	Q35	A - 1
		Q36	B - 1
		Q37	A - 1
		Q38	A - 3
		Q39	B - 3
		Q40	A - 3
		Q41	B - 3
		Q42	A - 3
		Q43	B - 2
		Q44	A - 2
		Q45	A - 4
		Q46	B - 4
		Q47	A - 4
		Q48	B - 4
		Q49	A - 4
		Q50	B - 3
		Q51	A - 3

MPA-A BOARD

Capstan/Tension/Drum Motor Power Amplifier

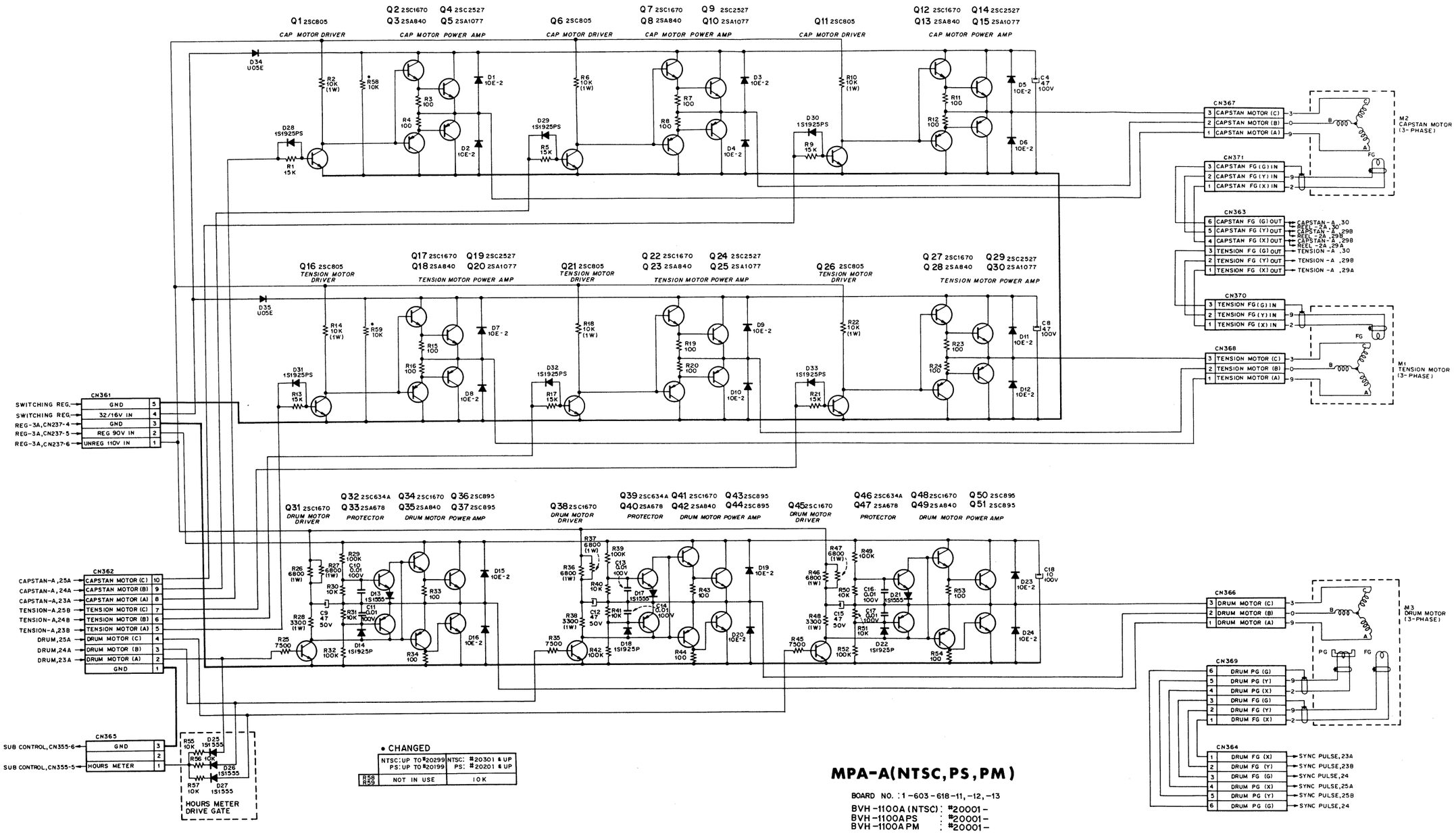

• CHANGED

	NTSC:UP TO #20299 PS:UP TO #20199	NTSC: #20301 & UP PS: #20201 & UP
R58 R59	NOT IN USE	10K

MPA-A(NTSC,PS,PM)

BOARD NO. :1-603-618-11,-12,-13

BVH-1100A (NTSC) : #20001-
BVH-1100APS : #20001-
BVH-1100APM : #20001-

PLUNGER-A PLUNGER-A

PLUNGER-A BOARD — *COMPONENT SIDE* —

FORMER
NTSC; # 20001 – 20399
PS ; # 20001 – 20299

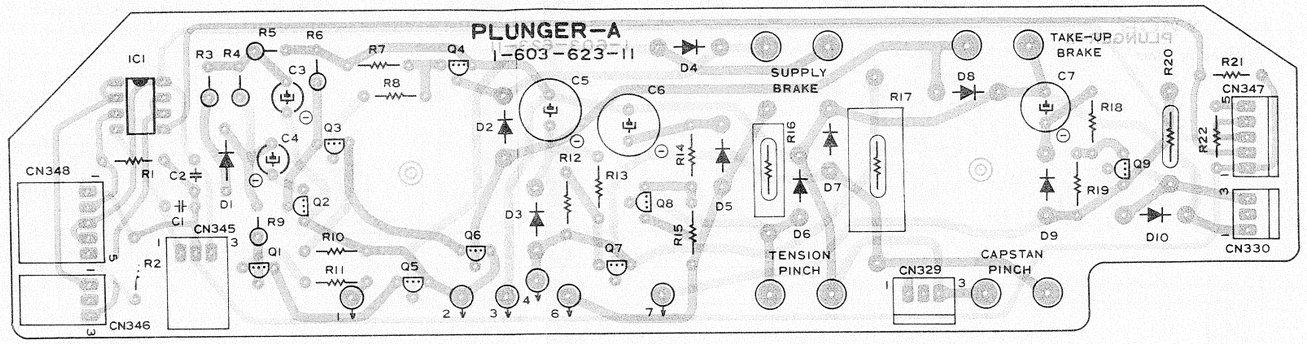

PLUNGER-A BOARD — *COMPONENT SIDE* —

NEW
NTSC; # 20401 –
PS ; # 20301 –

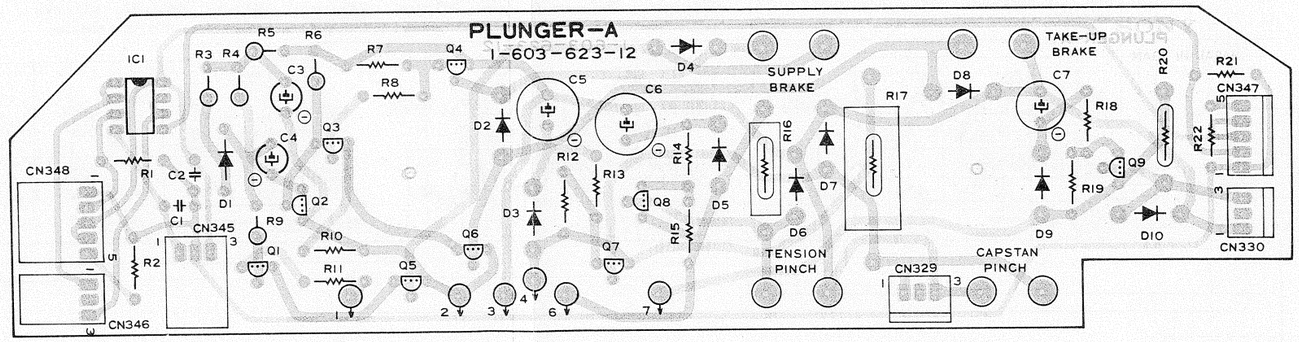

PLUNGER-A BOARD

S/T Tension Arm Amplifier
Reel/Tension/Capstan Solenoid Driver

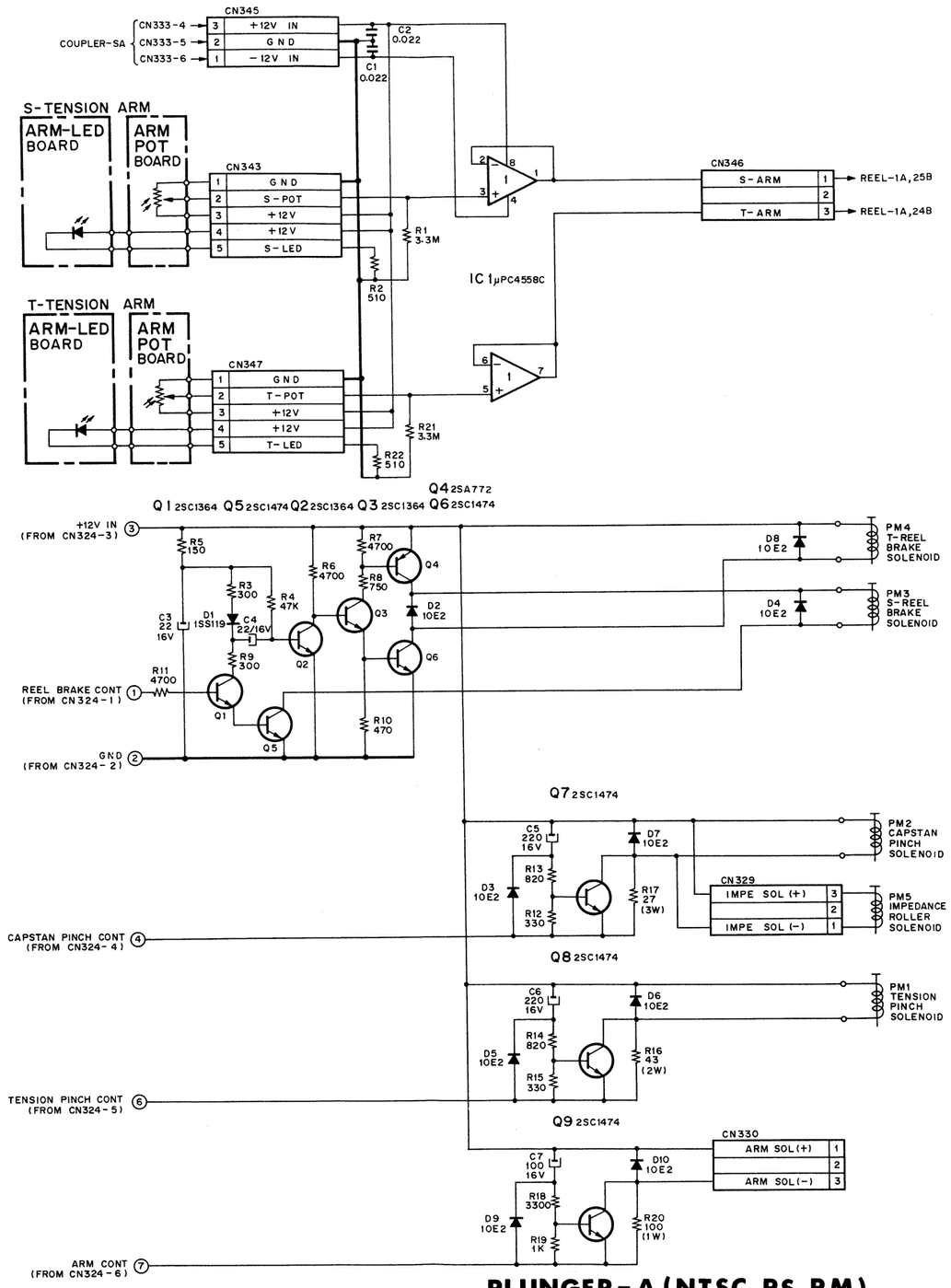

PLUNGER-A (NTSC,PS,PM)

BOARD NO. : 1-603-623-11,-12
BVH-1100A(J) : #20001-
BVH-1100A(U/C): #20001-
BVH-1100APS : #20001-
BVH-1100APM : #20001-

REC AMP BOARD — *COMPONENT SIDE* —

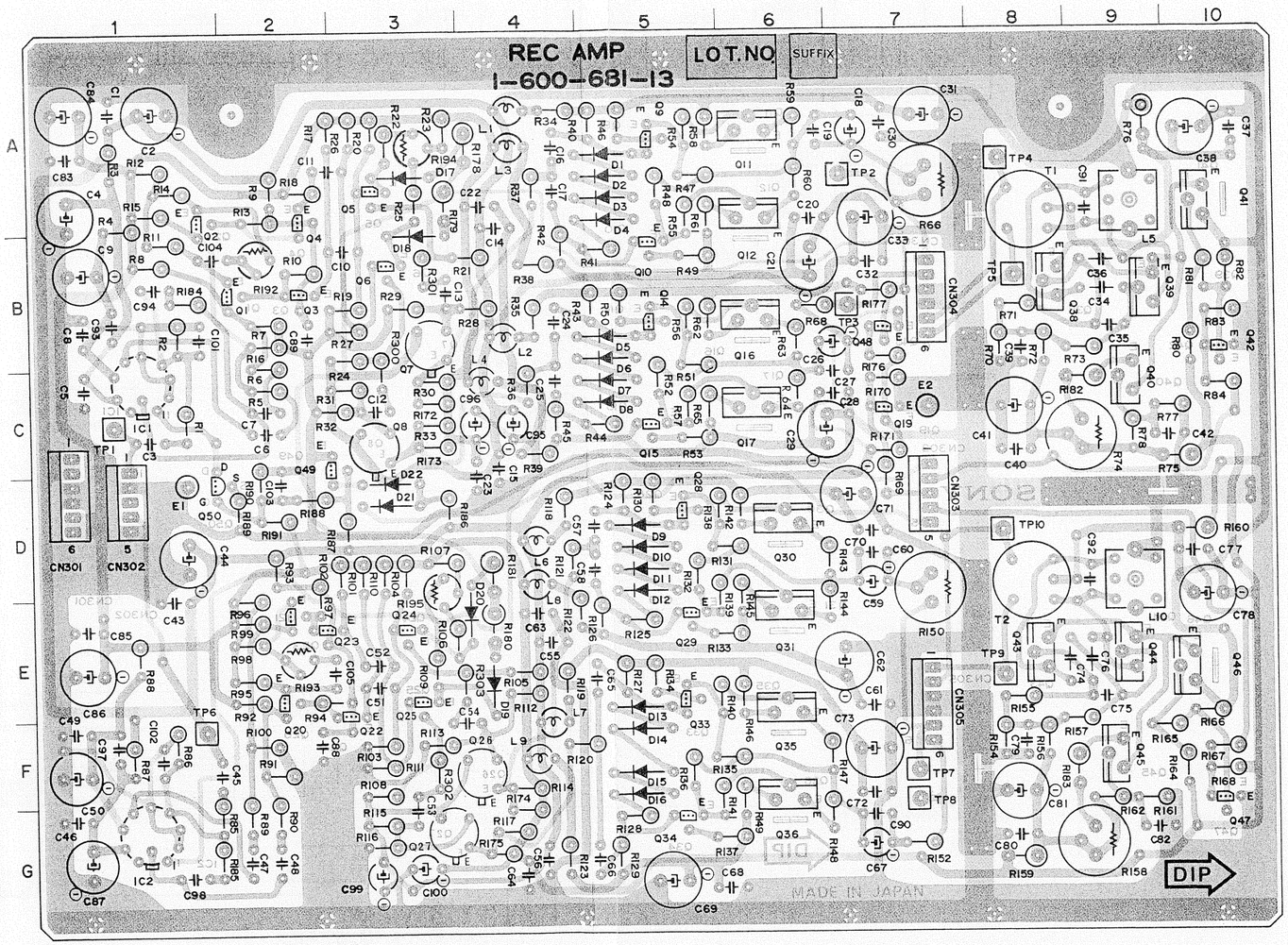

BVH-1100A (NTSC)
BVH-1100APS
BVH-1100APM
REC AMP BOARD
1-600-681-13

D1	A - 5		Q36	F - 6	
D2	A - 5		Q38	B - 8	
D3	A - 5		Q39	B - 9	
D4	A - 5		Q40	C - 9	
D5	B - 5		Q41	A - 10	
D6	B - 5		Q42	B - 10	
D7	C - 5		Q43	E - 8	
D8	C - 5		Q44	E - 9	
D9	D - 5		Q45	F - 9	
D10	D - 5		Q46	E - 10	
D11	D - 5		Q47	F - 10	
D12	D - 5		Q48	B - 7	
D13	E - 5		Q49	C - 2	
D14	F - 5		Q50	D - 1	
D15	F - 5				
D16	F - 5		R66	A - 7	
D17	A - 3		R74	C - 9	
D18	B - 3		R150	D - 7	
D19	E - 4		R158	G - 9	
D20	E - 4		R192	B - 2	
D21	D - 3		R193	E - 2	
D22	D - 3		R194	A - 3	
			R195	D - 3	
E1	D - 1				
E2	C - 7		TP1	C - 1	
			TP2	A - 7	
IC1	C - 1		TP3	B - 7	
IC2	G - 1		TP4	A - 8	
			TP5	B - 8	
L5	A - 9		TP6	F - 1	
L10	D - 9		TP7	F - 7	
			TP8	F - 7	
Q1	B - 2		TP9	E - 8	
Q2	A - 1		TP10	D - 8	
Q3	B - 2				
Q4	A - 2				
Q5	A - 3				
Q6	B - 3				
Q7	B - 3				
Q8	C - 3				
Q9	A - 5				
Q10	B - 5				
Q11	A - 6				
Q12	A - 6				
Q14	B - 5				
Q15	C - 5				
Q16	B - 6				
Q17	C - 6				
Q19	C - 7				
Q20	E - 2				
Q21	E - 2				
Q22	E - 3				
Q23	E - 2				
Q24	E - 3				
Q25	E - 3				
Q26	F - 4				
Q27	G - 3				
Q28	D - 5				
Q29	E - 5				
Q30	D - 6				
Q31	E - 6				
Q33	E - 5				
Q34	G - 5				
Q35	E - 6				

REC AMP BOARD

RF Record Amplifier
Rotary Erase Oscillator

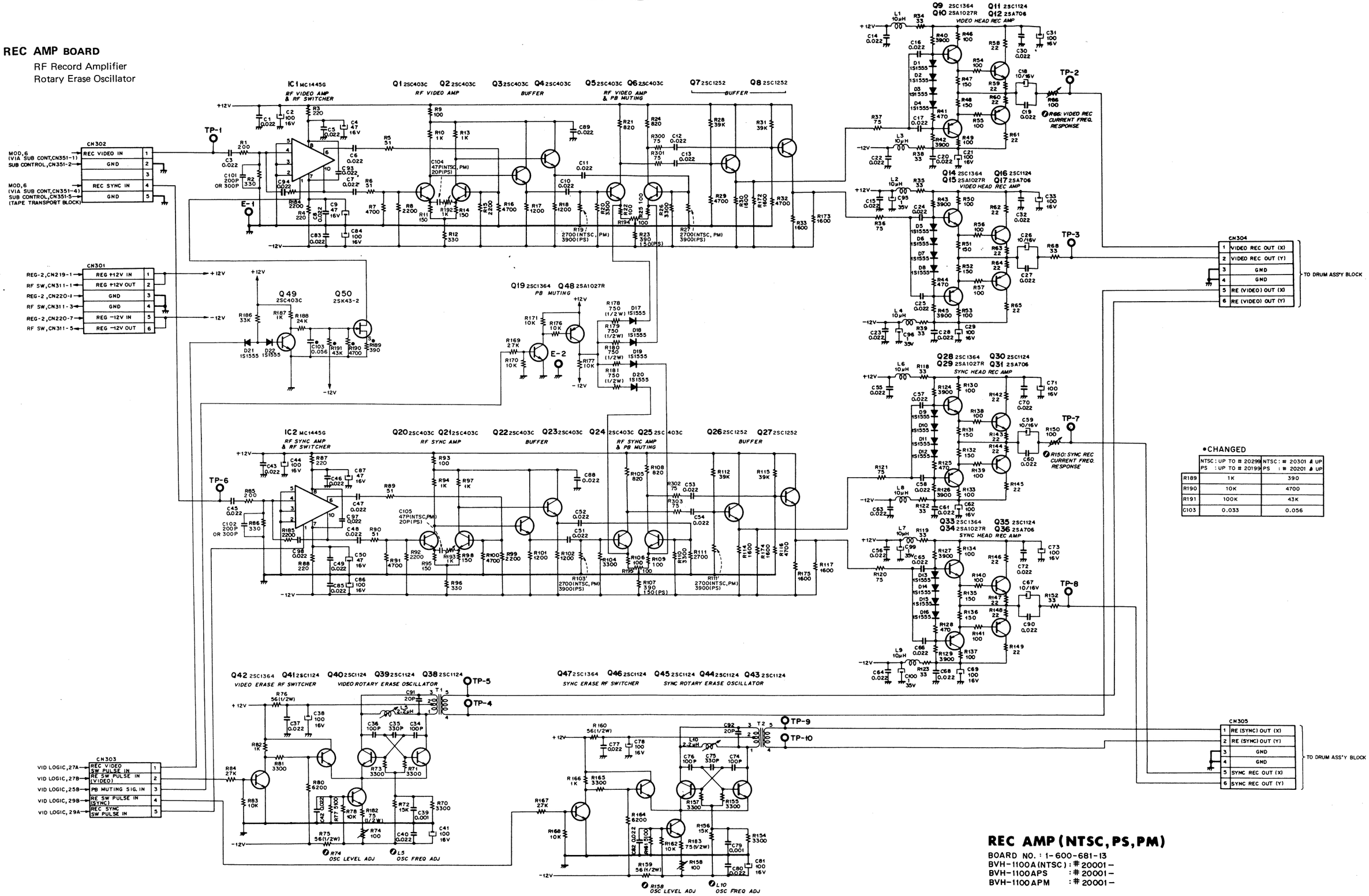

•CHANGED

	NTSC : UP TO # 20299 PS : UP TO # 20199	NTSC : # 20301 & UP PS : # 20201 & UP
R189	1K	390
R190	10K	4700
R191	100K	43K
C103	0.033	0.056

REC AMP (NTSC, PS, PM)

BOARD NO. : 1-600-681-13
BVH-1100A (NTSC) : # 20001 –
BVH-1100APS : # 20001 –
BVH-1100APM : # 20001 –

REEL-1A REEL-1A

REEL-1A BOARD — *COMPONENT SIDE* —

FORMER
NTSC; # 20001 – 20299
PS ; # 20001 – 20199

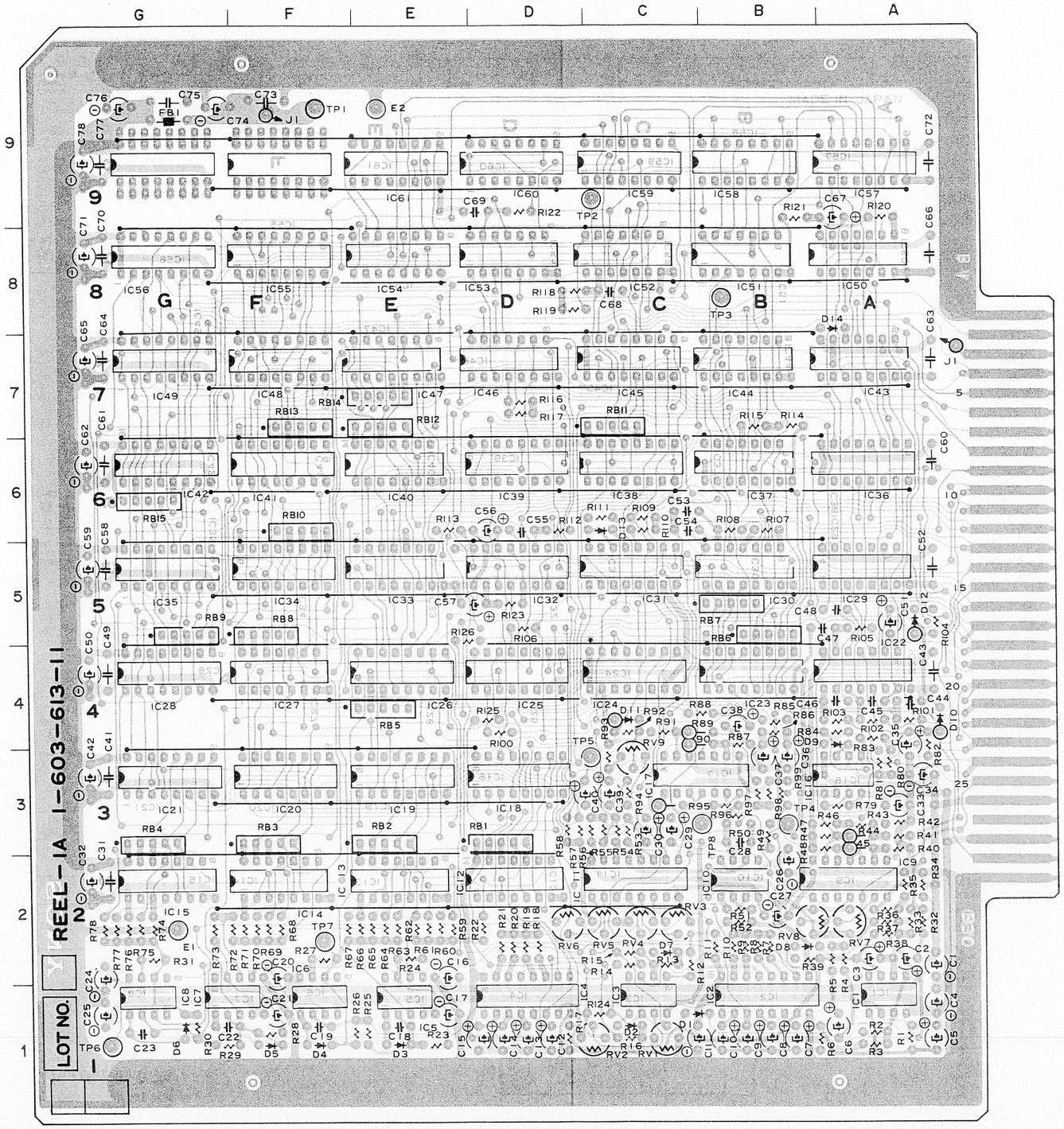

21-101 (3/7)

BVH-1100A (NTSC)
BVH-1100APS
BVH-1100APM
REEL-1A BOARD
1-603-613-11

D1	C - 1	IC42	G - 6
D2	C - 1	IC43	A - 7
D3	E - 1	IC44	B - 7
D4	F - 1	IC45	C - 7
D5	F - 1	IC46	D - 7
D6	G - 1	IC47	E - 7
D7	C - 2	IC48	F - 7
D8	B - 2	IC49	G - 7
D9	B - 4	IC50	A - 8
D11	D - 4	IC51	B - 8
D12	A - 5	IC52	C - 8
D13	C - 6	IC53	D - 8
D14	A - 8	IC54	E - 8
		IC55	F - 8
E1	G - 2	IC56	G - 8
E2	E - 9	IC57	A - 9
		IC58	B - 9
IC1	A - 1	IC59	C - 9
IC2	B - 1	IC60	D - 9
IC3	C - 1	IC61	E - 9
IC4	D - 1		
IC5	E - 1	RV1	C - 1
IC6	F - 1	RV2	C - 1
IC7	G - 1	RV3	C - 2
IC8	G - 1	RV4	C - 2
IC9	A - 2	RV5	C - 2
IC10	B - 2	RV6	D - 2
IC11	C - 2	RV7	A - 2
IC12	D - 2	RV8	B - 2
IC13	E - 2	RV9	C - 3
IC14	F - 2		
IC15	G - 2	TP1	F - 9
IC16	A - 3	TP2	C - 9
IC17	C - 3	TP3	B - 8
IC18	D - 3	TP4	B - 3
IC19	E - 3	TP5	D - 4
IC20	F - 3	TP6	G - 1
IC21	G - 3	TP7	F - 2
IC22	A - 4	TP8	C - 3
IC23	B - 4		
IC24	C - 4		
IC25	D - 4		
IC26	E - 4		
IC27	F - 4		
IC28	G - 4		
IC29	A - 5		
IC30	B - 5		
IC31	C - 5		
IC32	D - 5		
IC33	E - 5		
IC34	F - 5		
IC35	G - 5		
IC36	A - 6		
IC37	B - 6		
IC38	C - 6		
IC39	D - 6		
IC40	E - 6		
IC41	F - 6		

FORMER
NTSC; # 20001 – 20299
PS ; # 20001 – 20199

REEL-1A BOARD

Reel Servo

FORMER
NTSC; # 20001 – 20299
PS ; # 20001 – 20199

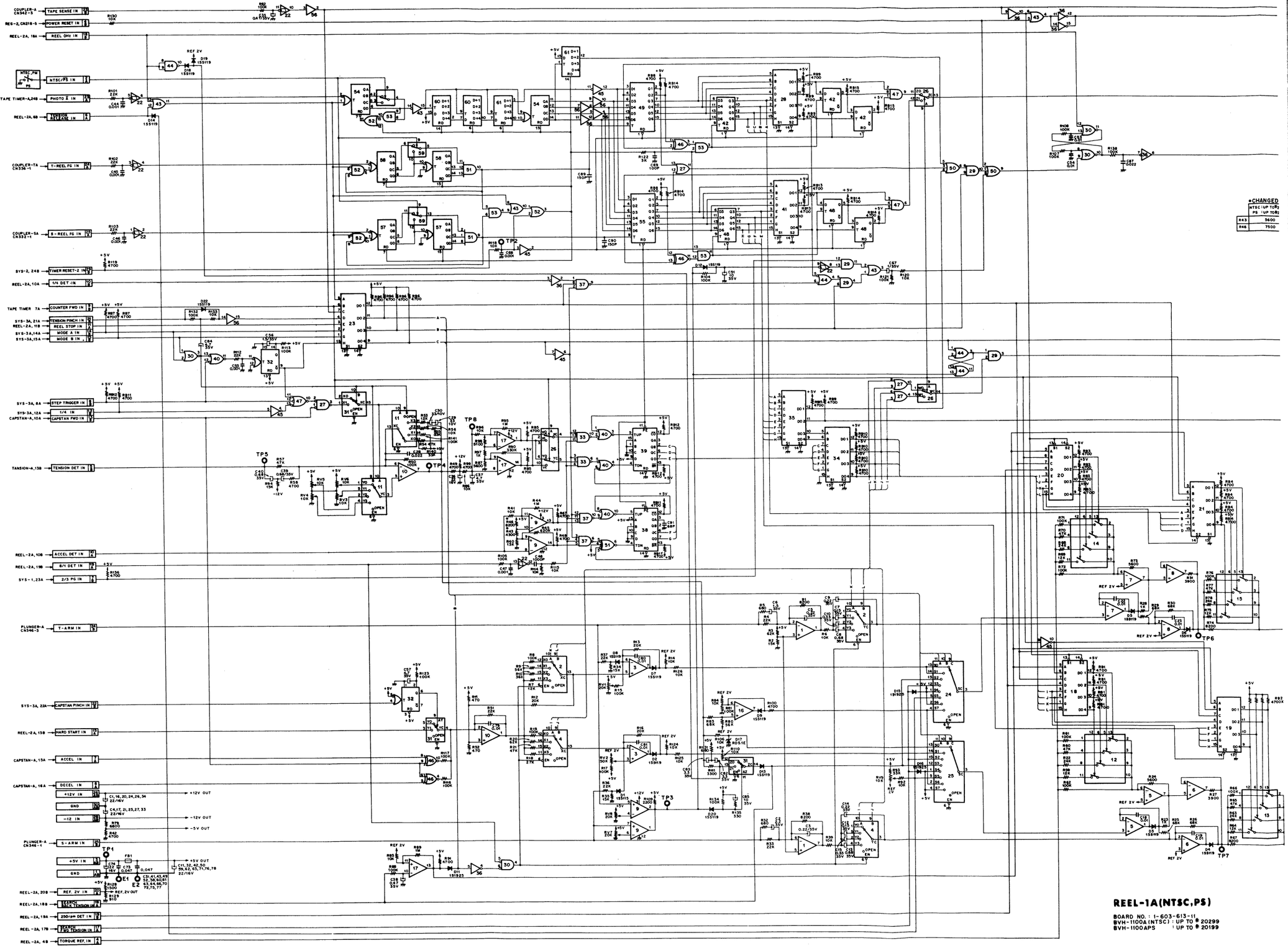

21-101 (5/7)

21-101 (6/7)

REEL-1A(NTSC,PS)

BOARD NO. : 1-603-613-11
BVH-1100A (NTSC) : UP TO # 20299
BVH-1100APS : UP TO # 20199

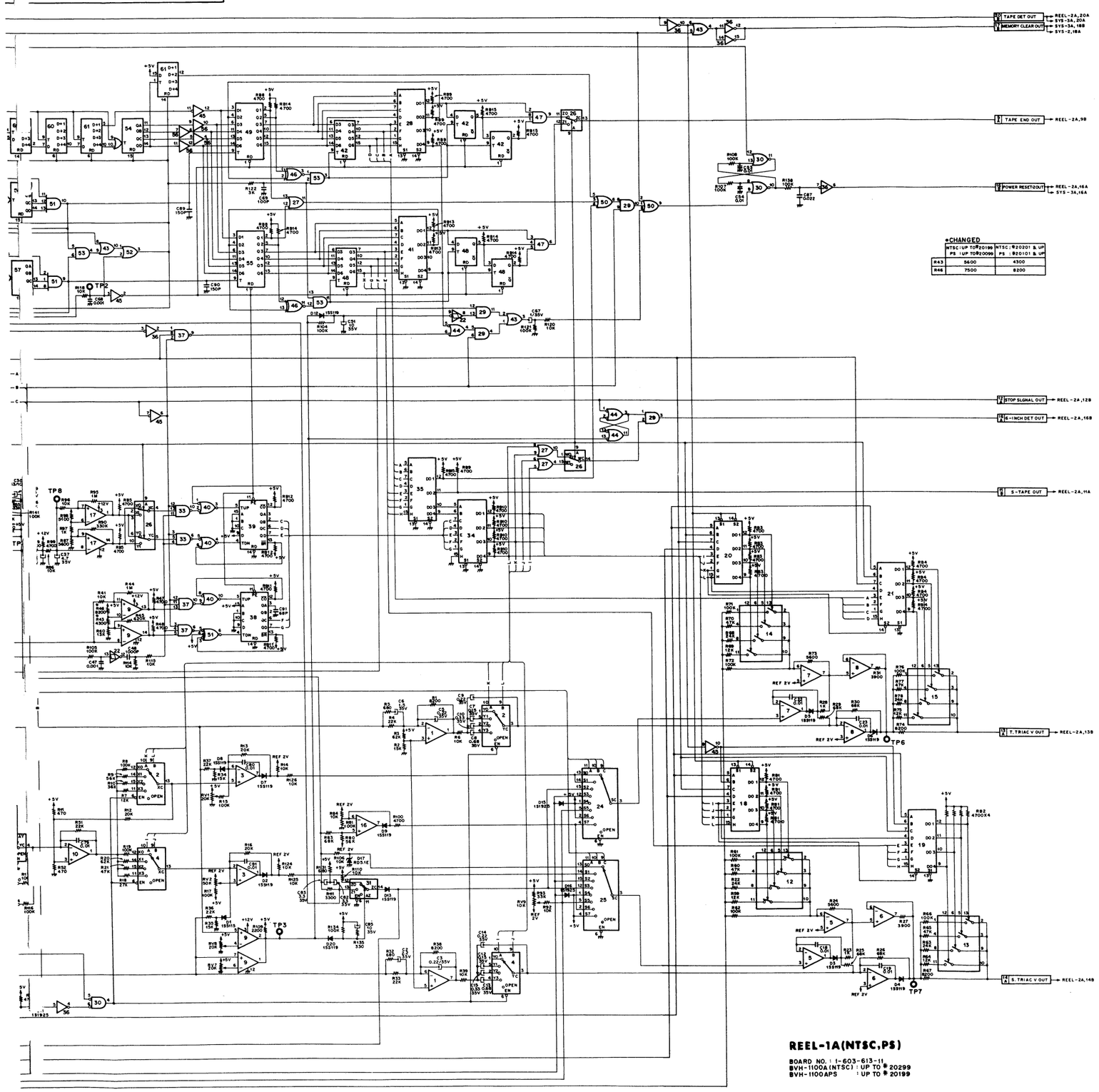

●CHANGED

	NTSC ; UP TO #20199 PS ; UP TO #20099	NTSC ; #20201 & UP PS ; #20101 & UP
R43	5600	4300
R46	7500	8200

REEL-1A(NTSC,PS)

BOARD NO. : 1-603-613-11
BVH-1100A (NTSC) : UP TO #20299
BVH-1100APS : UP TO #20199

IC18
MB7062-R8CA
PROGRAMMED DATA

WORD (ADDRESS)	DATA OUTPUTS (IN HEXADECIMAL)
0 – 15	A. 1. A. 7. 4. 4. 1. 1. A. 1. A. 7. 7. 7. 1. 1.
16 – 31	B. 3. B. 8. 7. 7. 2. 2. B. 3. B. 8. 9. 9. 2. 2.
32 – 47	C. 5. C. A. A. A. 4. 4. C. 5. C. A. D. D. 6. 6.
48 – 63	D. 9. D. E. F. F. B. B. D. 9. D. E. F. F. E. E.
64 – 79	A. 1. A. 7. 4. 4. 1. 1. A. 1. A. 7. 7. 7. 1. 1.
80 – 95	B. 3. B. 8. 7. 7. 2. 2. B. 3. B. 8. 9. 9. 2. 2.
96 – 111	C. 5. C. A. A. A. 4. 4. C. 5. C. A. D. D. 6. 6.
112 – 127	D. 9. D. E. F. F. B. B. D. 9. D. E. F. F. E. E.
128 – 143	A. 1. A. 7. 4. 4. 1. 1. A. 1. A. 7. 7. 7. 1. 1.
144 – 159	B. 3. B. 8. 7. 7. 2. 2. B. 3. B. 8. 9. 9. 2. 2.
160 – 175	C. 5. C. A. A. A. 4. 4. C. 5. C. A. A. A. 3. 3.
176 – 191	D. 9. D. E. F. F. A. A. D. 9. D. E. E. E. 9. 9.
192 – 207	A. 1. A. 7. 4. 4. 1. 1. A. 1. A. 7. 7. 7. 1. 1.
208 – 223	B. 3. B. 8. 7. 7. 2. 2. B. 3. B. 8. 9. 9. 0. 0.
224 – 239	C. 5. C. A. A. A. 4. 4. C. 5. C. A. A. A. 1. 1.
240 – 255	D. 7. D. C. F. F. A. A. D. 7. D. C. B. B. 4. 4.

IC19, IC21
MB7053-R9CA
PROGRAMMED DATA

WORD (ADDRESS)	DATA OUTPUTS (IN HEXADECIMAL)
0 – 15	0. 4. 0. 4. 6. 6. 6. 6. 0. 4. 0. 4. 6. 6. 6. 6.
16 – 31	1. 5. 1. 5. 7. 7. 7. 7. 1. 5. 1. 5. 6. 6. 5. 5.
32 – 47	2. 6. 2. 6. 8. 8. 6. 6. 2. 3. 2. 3. 6. 6. 4. 4.
48 – 63	3. 7. 3. 8. 9. 9. 7. 7. 3. 3. 3. 6. 6. 6. 3. 3.
64 – 79	4. 9. 4. 9. A. A. 9. 9. 4. 4. 4. 4. 6. 6. 3. 3.
80 – 95	5. B. 5. B. B. B. C. C. 5. 4. 5. 7. 6. 6. 3. 3.
96 – 111	6. D. 6. C. D. D. F. F. 6. 5. 6. 8. 6. 6. 4. 4.
112 – 127	7. F. 7. E. F. F. F. F. 7. 6. 7. 9. 7. 7. 5. 5.
128 – 143	8. F. 8. F. F. F. F. F. 8. 7. 8. A. 8. 8. 6. 6.
144 – 159	9. F. 9. F. F. F. F. F. 9. 8. 9. A. 8. 8. 6. 6.
160 – 175	A. F. A. F. F. F. F. F. A. A. A. C. C. C. A. A.
176 – 191	B. F. B. F. F. F. F. F. B. C. B. E. E. E. C. C.
192 – 207	C. F. C. F. F. F. F. F. C. E. C. F. F. F. E. E.
208 – 223	D. F. D. F. F. F. F. F. D. F. D. F. F. F. F. F.
224 – 239	E. F. E. F. F. F. F. F. E. F. E. F. F. F. F. F.
240 – 255	F. F. F. F. F. F. F. F. F. F. F. F. F. F. F. F.
256 – 271	0. 4. 0. 4. 6. 6. 6. 6. 0. 4. 0. 4. 6. 6. 6. 6.
272 – 287	1. 4. 1. 5. 6. 6. 5. 5. 1. 3. 1. 4. 6. 6. 5. 5.
288 – 303	2. 4. 2. 6. 7. 7. 4. 4. 2. 2. 2. 4. 5. 5. 4. 4.
304 – 319	3. 4. 3. 7. 8. 8. 4. 4. 3. 2. 3. 4. 5. 5. 3. 3.
320 – 335	4. 5. 4. 8. 8. 8. 4. 4. 4. 2. 4. 4. 4. 4. 2. 2.
336 – 351	5. 6. 5. 9. 8. 8. 5. 5. 5. 2. 5. 5. 3. 3. 2. 2.
352 – 367	6. 7. 6. A. 9. 9. 6. 6. 6. 2. 6. 5. 4. 4. 2. 2.
368 – 383	7. 9. 7. B. A. A. 8. 8. 7. 2. 7. 6. 4. 4. 2. 2.
384 – 399	8. B. 8. D. C. C. B. B. 8. 3. 8. 7. 5. 5. 2. 2.
400 – 415	9. D. 9. F. E. E. E. E. 9. 4. 9. 8. 6. 6. 3. 3.
416 – 431	A. F. A. F. F. F. F. F. A. 4. A. 9. 7. 7. 4. 4.
432 – 447	B. F. B. F. F. F. F. F. B. 5. B. A. 8. 8. 5. 5.
448 – 463	C. F. C. F. F. F. F. F. C. 6. C. B. 9. 9. 6. 6.
464 – 479	D. F. D. F. F. F. F. F. D. 7. D. C. A. A. 7. 7.
480 – 495	E. F. E. F. F. F. F. F. E. 9. E. D. B. B. 8. 8.
496 – 511	F. F. F. F. F. F. F. F. A. F. E. C. C. A. A.

IC20
MB7062-R0CA
PROGRAMMED DATA

WORD (ADDRESS)	DATA OUTPUTS (IN HEXADECIMAL)
0 – 15	A. 1. A. 7. 4. 4. 1. 1. A. 1. A. 7. 7. 7. 1. 1.
16 – 31	A. 1. A. 7. 4. 4. 1. 1. A. 1. A. 7. 7. 7. 1. 1.
32 – 47	A. 1. A. 7. 4. 4. 1. 1. A. 1. A. 7. 7. 7. 1. 1.
48 – 63	A. 1. A. 7. 4. 4. 1. 1. A. 1. A. 7. 7. 7. 1. 1.
64 – 79	C. 3. C. 8. 7. 7. 2. 2. C. 3. C. 8. 9. 9. 2. 2.
80 – 95	C. 3. C. 8. 7. 7. 2. 2. C. 3. C. 8. 9. 9. 2. 2.
96 – 111	C. 3. C. 8. 7. 7. 2. 2. C. 3. C. 8. 9. 9. 2. 2.
112 – 127	C. 3. C. 8. 7. 7. 2. 2. C. 3. C. 8. 9. 9. 0. 0.
128 – 143	D. 5. D. A. A. A. 4. 4. D. 5. D. A. D. D. 6. 6.
144 – 159	D. 5. D. A. A. A. 4. 4. D. 5. D. A. D. D. 6. 6.
160 – 175	D. 5. D. A. A. A. 4. 4. D. 5. D. A. A. A. 3. 3.
176 – 191	D. 5. D. A. A. A. 4. 4. D. 5. D. A. A. A. 1. 1.
192 – 207	E. 9. E. E. F. F. B. B. E. 9. E. E. F. F. E. E.
208 – 223	E. 9. E. E. F. F. B. B. E. 9. E. E. F. F. E. E.
224 – 239	E. 9. E. E. F. F. A. A. E. 9. E. E. E. E. 9. 9.
240 – 255	E. 7. E. C. F. F. A. A. E. 7. E. C. B. B. 4. 4.

IC23
MB7062-R3CA
PROGRAMMED DATA

WORD (ADDRESS)	DATA OUTPUTS (IN HEXADECIMAL)
0 – 15	9. B. 9. B. 0. 0. 0. 0. 9. B. 9. B. 2. 2. 2. 2.
16 – 31	9. B. 9. B. 0. 1. 0. 1. B. B. B. B. 2. 3. 2. 3.
32 – 47	9. B. 9. B. 2. 2. 2. 2. 9. B. 9. B. 2. 2. 2. 2.
48 – 63	B. B. B. B. D. B. 3. B. B. B. B. B. 2. 3. 2. 3.
64 – 79	9. B. 9. B. 2. 2. 2. 2. 9. B. 9. B. 2. 2. 2. 2.
80 – 95	B. B. B. B. 3. B. F. B. B. B. B. B. 2. 3. 2. 3.
96 – 111	9. B. 9. B. D. B. F. B. B. B. B. B. 2. 2. 2. 2.
112 – 127	9. B. 9. B. D. B. F. B. B. B. B. B. 2. 2. 3. 3.
128 – 143	9. B. 9. B. 0. 0. 0. 0. 9. B. 9. B. 2. 2. 2. 2.
144 – 159	9. B. 9. B. 0. 1. 0. 1. B. B. B. B. 2. 3. 2. 3.
160 – 175	9. B. 9. B. 4. 4. 5. 5. B. B. B. B. 2. 2. 2. 2.
176 – 191	9. B. B. B. D. B. 3. B. B. B. B. B. 2. 3. 2. 3.
192 – 207	9. B. 9. B. 7. 7. 6. 6. B. B. B. B. 2. 2. 2. 2.
208 – 223	B. B. 9. B. 3. B. F. B. B. B. B. B. 2. 3. 2. 3.
224 – 239	9. B. 9. B. D. B. F. B. B. B. B. B. 2. 2. 2. 2.
240 – 255	9. B. 9. B. D. B. F. B. B. B. B. B. 2. 3. 2. 3.

IC28, IC41
MB7067-R2CA
PROGRAMMED DATA

WORD (ADDRESS)	DATA OUTPUTS (IN HEXADECIMAL)
0 – 15	D. F. D. D. D. D. D. D. D. D. D. D. D. D. D. D.
16 – 31	E. C. E. A. 2. 2. 2. 2. 2. 2. 2. 2. 2. 2. 2. 2.
32 – 47	A. E. C. E. A. 2. 2. 2. 2. 2. 2. 2. 2. 2. 2. 2.
48 – 63	2. A. E. C. E. A. 2. 2. 2. 2. 2. 2. 2. 2. 2. 2.
64 – 79	2. 2. A. E. C. E. A. 2. 2. 2. 2. 2. 2. 2. 2. 2.
80 – 95	2. 2. 2. A. E. C. E. A. 2. 2. 2. 2. 2. 2. 2. 2.
96 – 111	2. 2. 2. 2. A. E. C. E. A. 2. 2. 2. 2. 2. 2. 2.
112 – 127	2. 2. 2. 2. A. A. E. C. E. A. A. 2. 2. 2. 2. 2.
128 – 143	2. 2. 2. 2. 2. A. A. E. C. E. A. A. 2. 2. 2. 2.
144 – 159	2. 2. 2. 2. 2. A. A. E. C. E. A. A. 2. 2. 2. 2.
160 – 175	2. 2. 2. 2. 2. 2. 2. A. A. E. C. E. A. A. 2. 2.
176 – 191	2. 2. 2. 2. 2. 2. 2. 2. A. A. E. C. E. A. A. 2.
192 – 207	A. 2. 2. 2. 2. 2. 2. 2. 2. A. A. E. C. E. A. A.
208 – 223	A. A. 2. 2. 2. 2. 2. 2. 2. 2. A. A. A. E. C. E. A.
224 – 239	A. A. A. 2. 2. 2. 2. 2. 2. 2. 2. A. A. A. E. C. E.
240 – 255	E. A. A. A. 2. 2. 2. 2. 2. 2. 2. 2. A. A. A. E. C.

IC34
MB7052-R4CA
PROGRAMMED DATA

WORD (ADDRESS)	DATA OUTPUTS (IN HEXADECIMAL)
0 – 15	3. 7. B. F. 2. 7. B. F. 1. 6. B. F. 0. 5. A. F.
16 – 31	0. 5. A. F. 4. 9. E. F. 8. D. E. F. C. D. E. F.
32 – 47	3. 7. B. F. 2. 7. B. F. 1. 6. B. F. 5. 5. A. F.
48 – 63	5. 5. A. F. 4. 9. E. F. 8. D. E. F. C. D. E. F.
64 – 79	3. 7. B. F. 7. 7. B. F. 6. 6. B. F. A. A. A. F.
80 – 95	A. A. A. F. 9. 9. E. F. D. D. E. F. C. D. E. F.
96 – 111	3. 7. B. F. 7. 7. B. F. B. B. B. F. F. F. F. F.
112 – 127	F. F. F. F. E. E. E. F. D. D. E. F. C. D. E. F.
128 – 143	0. 5. A. F. 0. 5. A. F. 0. 5. A. F. 0. 5. A. F.
144 – 159	0. 5. A. F. 0. 5. A. F. 0. 5. A. F. 0. 5. A. F.
160 – 175	0. 5. A. F. 0. 5. A. F. 0. 5. A. F. 0. 5. A. F.
176 – 191	0. 5. A. F. 0. 5. A. F. 0. 5. A. F. 0. 5. A. F.
192 – 207	0. 5. A. F. 0. 5. A. F. 0. 5. A. F. 0. 5. A. F.
208 – 223	0. 5. A. F. 0. 5. A. F. 0. 5. A. F. 0. 5. A. F.
224 – 239	0. 5. A. F. 0. 5. A. F. 0. 5. A. F. 0. 5. A. F.
240 – 255	0. 5. A. F. 0. 5. A. F. 0. 5. A. F. 0. 5. A. F.

IC35
MB7052-R5CA
PROGRAMMED DATA

WORD (ADDRESS)	DATA OUTPUTS (IN HEXADECIMAL)
0 – 15	0. 0. 0. 0. 0. 6. 6. 6. A. A. A. A. A. E. E. E.
16 – 31	0. 0. 0. 0. 0. 6. 6. 6. A. A. A. A. A. E. E. E.
32 – 47	0. 0. 0. 0. 6. 6. 6. A. A. A. A. A. A. E. E. E.
48 – 63	0. 0. 0. 6. 6. 6. A. A. A. A. A. A. E. E. E. E.
64 – 79	0. 0. 6. 6. 6. A. A. A. A. A. A. E. E. E. E. I.
80 – 95	6. 6. 6. 6. A. A. A. A. A. A. A. E. E. E. E. I.
96 – 111	6. 6. 6. A. A. A. A. A. A. A. E. E. E. E. I. I.
112 – 127	6. 6. A. A. A. A. A. A. A. E. E. E. E. I. I. I.
128 – 143	A. A. A. A. A. A. A. A. E. E. E. E. I. I. I. I.
144 – 159	A. A. A. A. A. A. E. E. E. E. E. E. I. I. I. I.
160 – 175	A. A. A. A. E. E. E. E. E. E. E. E. I. I. I. I.
176 – 191	A. A. A. E. E. E. E. E. E. E. I. I. I. I. I. I.
192 – 207	A. E. E. E. E. E. E. E. E. I. I. I. I. I. I. I.
208 – 223	E. E. E. E. E. E. E. E. I. I. I. I. I. I. I. I.
224 – 239	E. E. E. E. E. E. I. I. I. I. I. I. I. I. I. I.
240 – 255	E. E. E. E. E. I. I. I. I. I. I. I. I. I. I. I.

REF. NO	TYPE	+12V	–12V	+5V	GND
IC1	TL082CP	8	4		
2	TC4052BP (CD4052BE)			16	8
3	TL082CP	8	4		
4	TC4052BP (CD4052BE)			16	8
5	TL082CP	8	4		
6	TL082CP	8	4		
7	TL082CP	8	4		
8	TL082CP	8	4		
9	μPC339C			3	12
10	TL082CP	8	4		
11	TC4052BP (CD4052BE)			16	8
12	TC4066BP (CD4066BE)			14	7
13	TC4066BP (CD4066BE)			14	7
14	TC4066BP (CD4066BE)			14	7
15	TC4066BP (CD4066BE)			14	7
16	TL082CP	8	4		
17	μPC339C			3	12
18	MB7052-R8CA			16	8
19	MB7053-R9CA			16	8
20	MB7052-R0CA			16	8
21	MB7053-R9CA			16	8
22	MC14584BCP			14	7
23	MB7053-R3CA			16	8
24	TC4051BP (CD4051BE)			16	8
25	TC4051BP (CD4051BE)			16	8
26	MC14581BCP			16	8
27	TC4071BP (CD4071BE)			14	7
28	MB7067-R2CA			16	8
29	TC4081BP (CD4081BE)			14	7
30	TC4001BP (CD4001BE)			14	7
31	μPD4053BP (CD4053BE)			16	8
32	MC14538BCP			16	8
33	TC4023BP (CD4023BE)			14	7
34	MB7052-R4CA			16	8
35	MB7052-R5CA			16	8
36	TC4049BP (CD4049BE)			16	8
37	TC4023BP (CD4023BE)			14	7
38	SN74LS193N			16	8
39	SN74LS193N			16	8
40	TC4081BP (CD4081BE)			14	7
41	MB7067-R2CA			16	8
42	SN74LS174N			16	8
43	TC4071BP (CD4071BE)			14	7
44	TC4011BP (CD4011BE)			14	7
45	TC4049BP (CD4049BE)			16	8
46	MC14077BCP			14	7
47	TC4073BP (CD4073BE)			14	7
48	SN74LS174N			16	8
49	SN74LS174N			16	8
50	TC4075BP (CD4075BE)			14	7
51	TC4073BP (CD4073BE)			14	7
52	TC4071BP (CD4071BE)			14	7
53	TC4081BP (CD4081BE)			14	7
54	TC4520BP (MC14520BCP)			16	8
55	SN74LS174N			16	8
56	TC4050BP (CD4050BE)			16	8
57	TC4520BP (MC14520BCP)			16	8
58	TC4520BP (MC14520BCP)			16	8
59	MC14551BCP			16	8
60	TC4015BP (CD4015BE)			16	8
61	TC4015BP (CD4015BE)			16	8

FORMER
NTSC; # 20001 – 20299
PS ; # 20001 – 20199

REEL-1A BOARD — *COMPONENT SIDE* —

NEW
NTSC; # 20301 –
PS ; # 20201 –

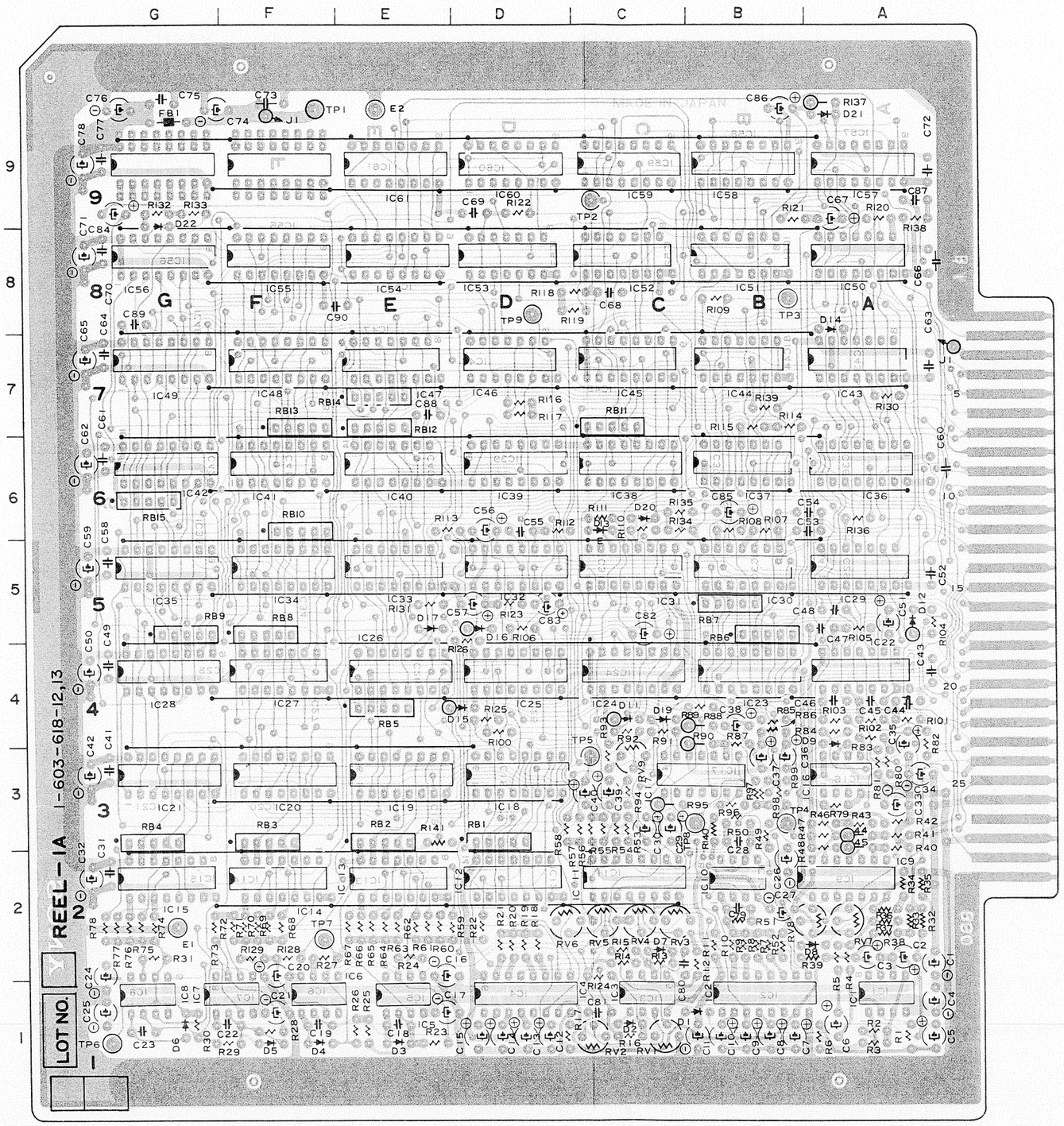

BVH-1100A (NTSC)
BVH-1100APS
BVH-1100APM
REEL-1A BOARD
1-603-613-12, 13

D1	C - 1		RV1	C - 1	
D2	C - 1		RV2	C - 1	
D3	E - 1		RV3	C - 2	
D4	F - 1		RV4	C - 2	
D5	F - 1		RV5	C - 2	
D6	G - 1		RV6	D - 2	
D7	C - 2		RV7	A - 2	
D8	A - 2		RV8	B - 2	
D9	A - 4		RV9	C - 3	
D11	C - 4				
D12	A - 5		TP1	F - 9	
D13	C - 6		TP2	C - 9	
D14	A - 8		TP3	B - 8	
D15	D - 4		TP4	B - 3	
D16	D - 5		TP5	C - 4	
D17	E - 5		TP6	G - 1	
D19	C - 4		TP7	F - 2	
D20	C - 6		TP8	C - 3	
D21	A - 9		TP9	D - 8	
D22	G - 9				
E1	G - 2				
E2	E - 9				

IC1	A - 1		IC41	F - 6	
IC2	B - 1		IC42	G - 6	
IC3	C - 1		IC43	A - 7	
IC4	D - 1		IC44	B - 7	
IC5	E - 1		IC45	C - 7	
IC6	F - 1		IC46	D - 7	
IC7	G - 1		IC47	E - 7	
IC8	G - 1		IC48	F - 7	
IC9	A - 2		IC49	G - 7	
IC10	B - 2		IC50	A - 8	
IC11	C - 2		IC51	B - 8	
IC12	D - 2		IC52	C - 8	
IC13	E - 2		IC53	D - 8	
IC14	F - 2		IC54	E - 8	
IC15	G - 2		IC55	F - 8	
IC16	A - 3		IC56	G - 8	
IC17	C - 3		IC57	A - 9	
IC18	D - 3		IC58	B - 9	
IC19	E - 3		IC59	C - 9	
IC20	F - 3		IC60	D - 9	
IC21	G - 3		IC61	E - 9	
IC22	A - 4				
IC23	B - 4				
IC24	C - 4				
IC25	D - 4				
IC26	E - 4				
IC27	F - 4				
IC28	G - 4				
IC29	A - 5				
IC30	B - 5				
IC31	C - 5				
IC32	D - 5				
IC33	E - 5				
IC34	F - 5				
IC35	G - 5				
IC36	A - 6				
IC37	B - 6				
IC38	C - 6				
IC39	D - 6				
IC40	E - 6				

NEW
NTSC; # 20301 –
PS ; # 20201 –

REEL-1A BOARD
Reel Servo

NEW
NTSC; # 20301 –
PS : # 20201 –

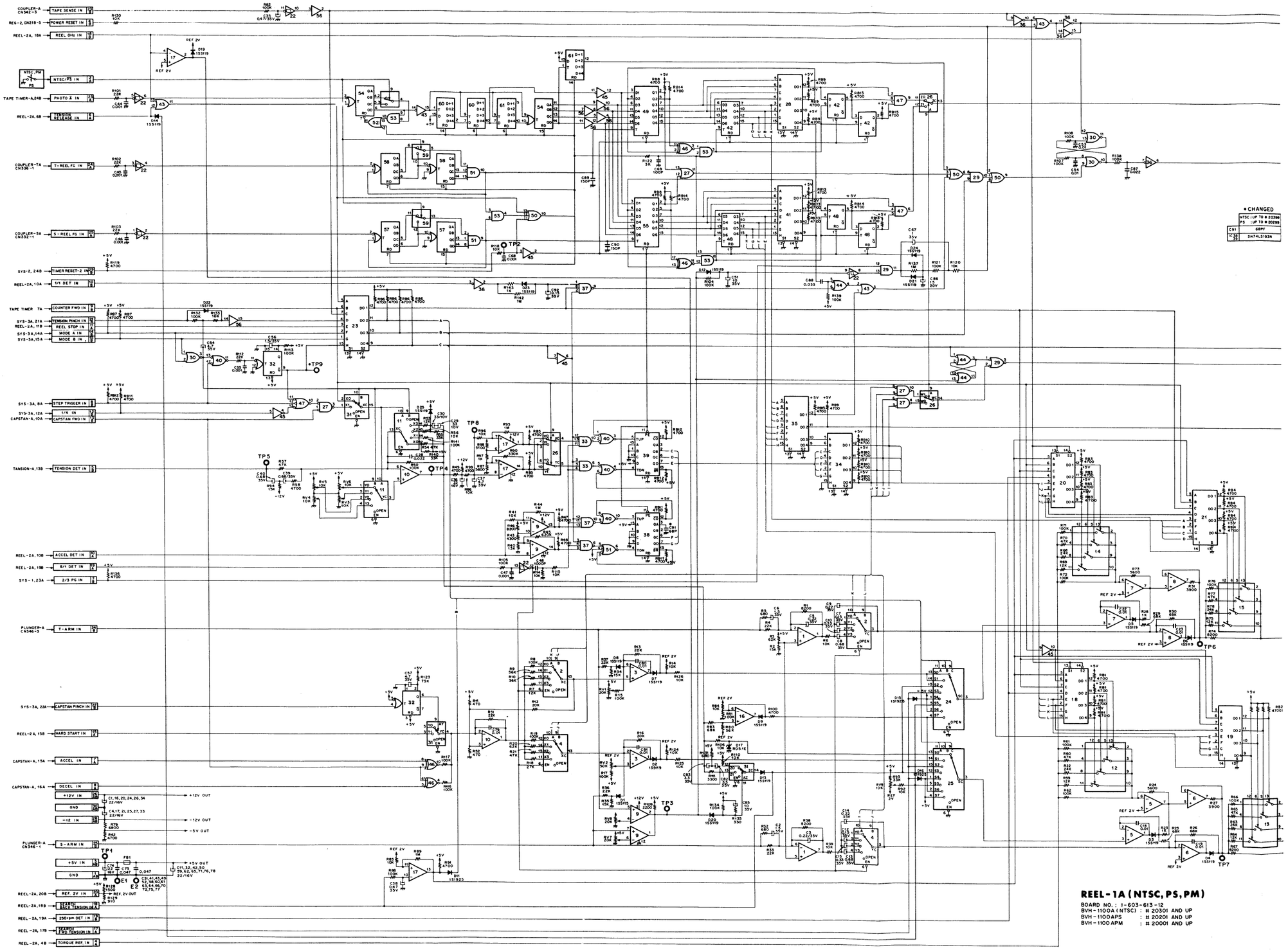

REEL-1A (NTSC, PS, PM)

BOARD NO. : 1-603-613-12
BVH-1100A (NTSC) : # 20301 AND UP
BVH-1100APS : # 20201 AND UP
BVH-1100APM : # 20001 AND UP

REEL-1A

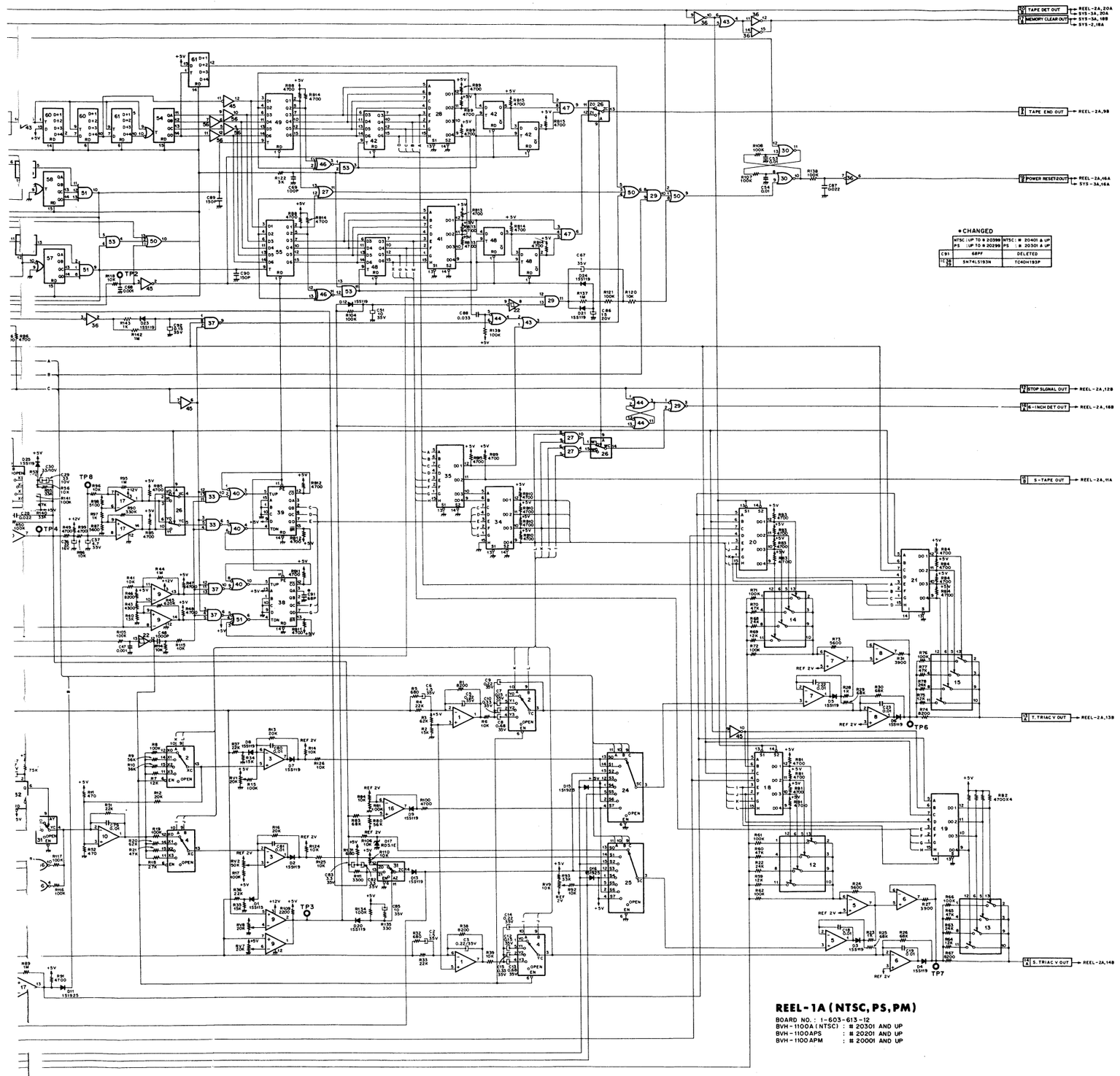

REEL-1A (NTSC, PS, PM)

BOARD NO. : 1-603-613-12
BVH-1100A (NTSC) : # 20301 AND UP
BVH-1100APS : # 20201 AND UP
BVH-1100APM : # 20001 AND UP

IC18
MB7052-R8CA
PROGRAMMED DATA

WORD (ADDRESS)	DATA OUTPUTS (IN HEXADECIMAL)
0 – 15	A, 1, A, 7, 4, 4, 1, 1, A, 1, A, 7, 7, 7, 1, 1,
16 – 31	B, 3, B, 8, 7, 7, 2, 2, B, 3, B, 8, 9, 9, 2, 2,
32 – 47	C, 5, C, A, A, A, 4, 4, C, 5, C, A, D, D, 6, 6,
48 – 63	D, 9, D, E, F, F, B, B, D, 9, D, E, F, F, E, E,
64 – 79	A, 1, A, 7, 4, 4, 1, 1, A, 1, A, 7, 7, 7, 1, 1,
80 – 95	B, 3, B, 8, 7, 7, 2, 2, B, 3, B, 8, 9, 9, 2, 2,
96 – 111	C, 5, C, A, A, A, 4, 4, C, 5, C, A, D, D, 6, 6,
112 – 127	D, 9, D, E, F, F, B, B, D, 9, D, E, F, F, E, E,
128 – 143	A, 1, A, 7, 4, 4, 1, 1, A, 1, A, 7, 7, 7, 1, 1,
144 – 159	B, 3, B, 8, 7, 7, 2, 2, B, 3, B, 8, 9, 9, 2, 2,
160 – 175	C, 5, C, A, A, A, 4, 4, C, 5, C, A, A, A, 3, 3,
176 – 191	D, 9, D, E, F, F, A, A, D, 9, D, E, E, E, 9, 9,
192 – 207	A, 1, A, 7, 4, 4, 1, 1, A, 1, A, 7, 7, 7, 1, 1,
208 – 223	B, 3, B, 8, 7, 7, 2, 2, B, 3, B, 8, 9, 9, 0, 0,
224 – 239	C, 5, C, A, A, A, 4, 4, C, 5, C, A, A, A, 1, 1,
240 – 255	D, 7, D, C, F, F, A, A, D, 7, D, C, B, B, 4, 4,

IC19, IC21
MB7053-R9CA
PROGRAMMED DATA

WORD (ADDRESS)	DATA OUTPUTS (IN HEXADECIMAL)
0 – 15	0, 4, 0, 4, 6, 6, 6, 6, 0, 4, 0, 4, 6, 6, 6, 6,
16 – 31	1, 5, 1, 5, 7, 7, 6, 6, 1, 5, 1, 4, 6, 6, 5, 5,
32 – 47	2, 6, 2, 7, 8, 8, 6, 6, 2, 3, 2, 5, 6, 6, 4, 4,
48 – 63	3, 7, 3, 8, 9, 9, 7, 7, 3, 3, 3, 6, 6, 6, 3, 3,
64 – 79	4, 9, 4, 9, A, A, 9, 9, 4, 4, 4, 6, 6, 6, 3, 3,
80 – 95	5, B, 5, B, B, B, C, C, 5, 4, 5, 7, 6, 6, 3, 3,
96 – 111	6, D, 6, C, D, D, F, F, 6, 5, 6, 8, 6, 6, 4, 4,
112 – 127	7, F, 7, E, F, F, F, F, 7, 6, 7, 9, 7, 7, 5, 5,
128 – 143	8, F, 8, F, F, F, F, F, 8, 7, 8, A, 8, 8, 6, 6,
144 – 159	9, F, 9, F, F, F, F, F, 9, 8, 9, B, A, A, 8, 8,
160 – 175	A, F, A, F, F, F, F, F, A, A, A, C, C, C, A, A,
176 – 191	B, F, B, F, F, F, F, F, B, C, B, E, E, E, C, C,
192 – 207	C, F, C, F, F, F, F, F, C, E, C, F, F, F, E, E,
208 – 223	D, F, D, F, F, F, F, F, D, F, D, F, F, F, F, F,
224 – 239	E, F, E, F, F, F, F, F, E, F, E, F, F, F, F, F,
240 – 255	F, F, F, F, F, F, F, F, F, F, F, F, F, F, F, F,
256 – 271	0, 4, 0, 4, 6, 6, 6, 6, 0, 4, 0, 4, 6, 6, 6, 6,
272 – 287	1, 4, 1, 5, 6, 6, 5, 5, 1, 3, 1, 4, 6, 6, 5, 5,
288 – 303	2, 4, 2, 6, 7, 7, 4, 4, 2, 2, 2, 4, 5, 5, 4, 4,
304 – 319	3, 4, 3, 7, 8, 8, 4, 4, 3, 2, 3, 4, 5, 5, 3, 3,
320 – 335	4, 5, 4, 8, 8, 8, 4, 4, 4, 2, 4, 4, 4, 4, 2, 2,
336 – 351	5, 6, 5, 9, 8, 8, 5, 5, 5, 2, 5, 5, 3, 3, 2, 2,
352 – 367	6, 7, 6, A, 9, 9, 6, 6, 6, 2, 6, 5, 4, 4, 2, 2,
368 – 383	7, 9, 7, B, A, A, 8, 8, 7, 2, 7, 6, 4, 4, 2, 2,
384 – 399	8, B, 8, D, C, C, B, B, 8, 3, 8, 7, 5, 5, 2, 2,
400 – 415	9, D, 9, F, E, E, E, E, 9, 4, 9, B, 6, 6, 3, 3,
416 – 431	A, F, A, F, F, F, F, F, A, 4, A, 9, 7, 7, 4, 4,
432 – 447	B, F, B, F, F, F, F, F, B, 5, B, A, 8, 8, 5, 5,
448 – 463	C, F, C, F, F, F, F, F, C, 6, C, B, 9, 9, 6, 6,
464 – 479	D, F, D, F, F, F, F, F, D, 7, D, C, A, A, 7, 7,
480 – 495	E, F, E, F, F, F, F, F, E, 9, E, D, B, B, 8, 8,
496 – 511	F, F, F, F, F, F, F, F, F, A, F, E, C, C, A, A,

IC20
MB7052-R0CA
PROGRAMMED DATA

WORD (ADDRESS)	DATA OUTPUTS (IN HEXADECIMAL)
0 – 15	A, 1, A, 7, 4, 4, 1, 1, A, 1, A, 7, 7, 7, 1, 1,
16 – 31	A, 1, A, 7, 4, 4, 1, 1, A, 1, A, 7, 7, 7, 1, 1,
32 – 47	A, 1, A, 7, 4, 4, 1, 1, A, 1, A, 7, 7, 7, 1, 1,
48 – 63	A, 1, A, 7, 4, 4, 1, 1, A, 1, A, 7, 7, 7, 1, 1,
64 – 79	C, 3, C, 8, 7, 7, 2, 2, C, 3, C, 8, 9, 9, 2, 2,
80 – 95	C, 3, C, 8, 7, 7, 2, 2, C, 3, C, 8, 9, 9, 2, 2,
96 – 111	C, 3, C, 8, 7, 7, 2, 2, C, 3, C, 8, 9, 9, 2, 2,
112 – 127	C, 3, C, 8, 7, 7, 2, 2, C, 3, C, 8, 9, 9, 0, 0,
128 – 143	D, 5, D, A, A, A, 4, 4, D, 5, D, A, D, D, 6, 6,
144 – 159	D, 5, D, A, A, A, 4, 4, D, 5, D, A, D, D, 6, 6,
160 – 175	D, 5, D, A, A, A, 4, 4, D, 5, D, A, A, A, 3, 3,
176 – 191	D, 5, D, A, A, A, 4, 4, D, 5, D, A, A, A, 1, 1,
192 – 207	E, 9, E, E, F, F, B, B, E, 9, E, E, F, F, E, E,
208 – 223	E, 9, E, E, F, F, B, B, E, 9, E, E, F, F, E, E,
224 – 239	E, 9, E, E, F, F, A, A, E, 9, E, E, E, E, 9, 9,
240 – 255	E, 7, E, C, F, F, A, A, E, 7, E, C, B, B, 4, 4,

IC23
MB7053-R3CB
PROGRAMMED DATA

WORD (ADDRESS)	DATA OUTPUTS (IN HEXADECIMAL)
0 – 15	9, B, 9, B, 0, 0, 0, 0, 9, B, 9, B, 2, 2, 2, 2,
16 – 31	9, B, 9, B, 0, 1, 0, 1, B, B, B, B, 2, 3, 2, 3,
32 – 47	9, B, 9, B, 2, 2, 2, 2, 9, B, 9, B, 2, 2, 2, 2,
48 – 63	B, B, B, B, B, 3, B, B, B, B, B, B, 2, 3, 2, 3,
64 – 79	9, B, 9, B, 2, 2, 2, 2, 9, B, 9, B, 2, 2, 2, 2,
80 – 95	B, B, B, B, 3, B, F, B, B, B, B, B, 2, 3, 2, 3,
96 – 111	9, B, 9, B, D, 2, F, 2, B, B, B, B, 2, 2, 2, 2,
112 – 127	9, B, 9, B, D, 2, F, 2, B, B, B, B, 2, 3, 2, 3,
128 – 143	9, B, 9, B, 0, 0, 0, 0, 9, B, 9, B, 2, 2, 2, 2,
144 – 159	9, B, 9, B, 0, 1, 0, 1, B, B, B, B, 2, 3, 2, 3,
160 – 175	9, B, 9, B, 4, 4, 5, 5, B, B, B, B, 2, 2, 2, 2,
176 – 191	9, B, B, B, D, 3, B, B, B, B, B, B, 2, 3, 2, 3,
192 – 207	9, B, 9, B, 7, 7, 6, 6, B, B, B, B, 2, 3, 2, 3,
208 – 223	B, B, 9, B, 3, B, F, B, B, B, B, B, 2, 3, 2, 3,
224 – 239	9, B, 9, B, D, B, F, B, B, B, B, B, 2, 2, 2, 2,
240 – 256	9, B, 9, B, D, B, F, B, B, B, B, B, 2, 3, 2, 3,
256 – 271	0, 0, 0, 0, 0, 0, 0, 0, 0, 0, 0, 0, 0, 0, 0, 0,
272 – 287	0, 0, 0, 0, 0, 0, 0, 0, 0, 0, 0, 0, 0, 0, 0, 0,
288 – 303	0, 0, 0, 0, 0, 0, 0, 0, 0, 0, 0, 0, 0, 0, 0, 0,
304 – 319	0, 0, 0, 0, 0, 0, 0, 0, 0, 0, 0, 0, 0, 0, 0, 0,
320 – 336	0, 0, 0, 0, 0, 0, 0, 0, 0, 0, 0, 0, 0, 0, 0, 0,
336 – 351	0, 0, 0, 0, 0, 0, 0, 0, 0, 0, 0, 0, 0, 0, 0, 0,
352 – 367	0, 0, 0, 0, 0, 0, 0, 0, 0, 0, 0, 0, 0, 0, 0, 0,
368 – 383	0, 0, 0, 0, 0, 0, 0, 0, 0, 0, 0, 0, 0, 0, 0, 0,
384 – 399	0, 0, 0, 0, 0, 0, 0, 0, 0, 0, 0, 0, 0, 0, 0, 0,
400 – 415	0, 0, 0, 0, 0, 0, 0, 0, 0, 0, 0, 0, 0, 0, 0, 0,
416 – 431	0, 0, 0, 0, 0, 0, 0, 0, 0, 0, 0, 0, 0, 0, 0, 0,
432 – 447	0, 0, 0, 0, 0, 0, 0, 0, 0, 0, 0, 0, 0, 0, 0, 0,
448 – 463	0, 0, 0, 0, 0, 0, 0, 0, 0, 0, 0, 0, 0, 0, 0, 0,
464 – 479	0, 0, 0, 0, 0, 0, 0, 0, 0, 0, 0, 0, 0, 0, 0, 0,
480 – 496	0, 0, 0, 0, 0, 0, 0, 0, 0, 0, 0, 0, 0, 0, 0, 0,
496 – 511	0, 0, 0, 0, 0, 0, 0, 0, 0, 0, 0, 0, 0, 0, 0, 0,

IC28, IC41
MB7087-R2CA
PROGRAMMED DATA

WORD (ADDRESS)	DATA OUTPUTS (IN HEXADECIMAL)
0 – 15	D, F, D, D, D, D, D, D, D, D, D, D, D, D, D, D,
16 – 31	E, C, E, E, A, 2, 2, 2, 2, 2, 2, 2, 2, 2, 2, 2,
32 – 47	A, E, C, E, A, 2, 2, 2, 2, 2, 2, 2, 2, 2, 2, 2,
48 – 63	2, A, E, C, E, A, 2, 2, 2, 2, 2, 2, 2, 2, 2, 2,
64 – 79	2, 2, A, E, C, E, A, 2, 2, 2, 2, 2, 2, 2, 2, 2,
80 – 95	2, 2, 2, A, E, C, E, A, 2, 2, 2, 2, 2, 2, 2, 2,
96 – 111	2, 2, 2, 2, A, E, C, E, A, 2, 2, 2, 2, 2, 2, 2,
112 – 127	2, 2, 2, 2, A, A, E, C, E, A, 2, 2, 2, 2, 2, 2,
128 – 143	2, 2, 2, 2, 2, 2, A, A, E, C, E, A, 2, 2, 2, 2,
144 – 159	2, 2, 2, 2, 2, 2, 2, A, A, E, C, E, A, 2, 2, 2,
160 – 175	2, 2, 2, 2, 2, 2, 2, 2, A, A, E, C, E, A, A, 2,
176 – 191	2, 2, 2, 2, 2, 2, 2, 2, 2, A, A, E, C, E, A, A,
192 – 207	A, 2, 2, 2, 2, 2, 2, 2, 2, 2, A, A, E, C, E, A,
208 – 223	A, A, 2, 2, 2, 2, 2, 2, 2, 2, 2, A, A, E, C, E,
224 – 239	A, A, A, 2, 2, 2, 2, 2, 2, 2, 2, 2, A, A, E, C,
240 – 255	E, A, A, A, 2, 2, 2, 2, 2, 2, 2, 2, 2, A, A, E,

IC34
MB7052-R4CA
PROGRAMMED DATA

WORD (ADDRESS)	DATA OUTPUTS (IN HEXADECIMAL)
0 – 15	3, 7, B, F, 2, 7, B, F, 1, 6, B, F, 0, 5, A, F,
16 – 31	0, 5, A, F, 4, 9, E, F, 8, D, E, F, C, D, E, F,
32 – 47	3, 7, B, F, 2, 7, B, F, 1, 6, B, F, 5, 5, A, F,
48 – 63	5, 5, A, F, 4, 9, E, F, 8, D, E, F, C, D, E, F,
64 – 79	3, 7, B, F, 7, 7, B, F, 6, 6, B, F, A, A, A, F,
80 – 95	A, A, A, F, 9, 9, E, F, D, D, E, F, C, D, E, F,
96 – 111	3, 7, B, F, 7, 7, B, F, B, B, B, F, F, F, F, F,
112 – 127	F, F, F, F, E, E, E, F, D, D, E, F, C, D, E, F,
128 – 143	0, 5, A, F, 0, 5, A, F, 0, 5, A, F, 0, 5, A, F,
144 – 159	0, 5, A, F, 0, 5, A, F, 0, 5, A, F, 0, 5, A, F,
160 – 175	0, 5, A, F, 0, 5, A, F, 0, 5, A, F, 0, 5, A, F,
176 – 191	0, 5, A, F, 0, 5, A, F, 0, 5, A, F, 0, 5, A, F,
192 – 207	0, 5, A, F, 0, 5, A, F, 0, 5, A, F, 0, 5, A, F,
208 – 223	0, 5, A, F, 0, 5, A, F, 0, 5, A, F, 0, 5, A, F,
224 – 239	0, 5, A, F, 0, 5, A, F, 0, 5, A, F, 0, 5, A, F,
240 – 255	0, 5, A, F, 0, 5, A, F, 0, 5, A, F, 0, 5, A, F,

IC35
MB7052-R5CA
PROGRAMMED DATA

WORD (ADDRESS)	DATA OUTPUTS (IN HEXADECIMAL)
0 – 15	0, 0, 0, 0, 0, 6, 6, 6, A, A, A, A, A, E, E, E,
16 – 31	0, 0, 0, 0, 0, 6, 6, 6, A, A, A, A, A, E, E, E,
32 – 47	0, 0, 0, 0, 0, 6, 6, 6, A, A, A, A, A, E, E, E,
48 – 63	0, 0, 0, 0, 6, 6, 6, A, A, A, A, A, E, E, E, E,
64 – 79	0, 0, 0, 6, 6, 6, A, A, A, A, A, E, E, E, E, 1,
80 – 95	6, 6, 6, 6, A, A, A, A, A, E, E, E, E, 1, 1, 1,
96 – 111	6, 6, 6, A, A, A, A, A, E, E, E, E, 1, 1, 1, 1,
112 – 127	6, 6, 6, A, A, A, A, A, E, E, E, E, 1, 1, 1, 1,
128 – 143	A, A, A, A, A, A, E, E, E, E, E, 1, 1, 1, 1, 1,
144 – 159	A, A, A, A, A, E, E, E, E, E, E, 1, 1, 1, 1, 1,
160 – 175	A, A, A, A, E, E, E, E, E, E, 1, 1, 1, 1, 1, 1,
176 – 191	A, A, A, E, E, E, E, E, E, 1, 1, 1, 1, 1, 1, 1,
192 – 207	A, E, E, E, E, E, E, 1, 1, 1, 1, 1, 1, 1, 1, 1,
208 – 223	E, E, E, E, E, E, 1, 1, 1, 1, 1, 1, 1, 1, 1, 1,
224 – 239	E, E, E, E, E, 1, 1, 1, 1, 1, 1, 1, 1, 1, 1, 1,
240 – 256	E, E, E, E, 1, 1, 1, 1, 1, 1, 1, 1, 1, 1, 1, 1,

REF. NO	TYPE	+12V	–12V	+5V	GND
IC1	μPC4558C (RC4558)	8	4		
2	TC40629P (CD4029BE)			16	8
3	μPC4558C (RC4558)	8	4		
4	TC40629P (CD4052BE)			16	8
5	μPC4558C (RC4558)	8	4		
6	μPC4558C (RC4558)	8	4		
7	μPC4558C (RC4558)	8	4		
8	μPC4558C (RC4558)	8	4		
9	μPC339C			3	12
10	μPC4558C (RC4558)	8	4		
11	TC40629P (CD4052BE)			16	8
12	TC40668P (CD4066BE)			14	7
13	TC40668P (CD4066BE)			14	7
14	TC40668P (CD4066BE)			14	7
15	TC40668P (CD4066BE)			14	7
16	μPC4558C (RC4558)	8	4		
17	μPC339C			3	12
18	MB7052-R8CA			16	8
19	MB7053-R9CA			16	8
20	MB7052-R0CA			16	8
21	MB7053-R9CA			16	8
22	MC14584BCP			14	7
23	MB7053-R3CB			16	8
24	TC40518P (CD4051BE)			16	8
25	TC40518P (CD4051BE)			16	8
26	MC14067BCP			16	8
27	TC40018P (CD4071BE)			14	7
28	MB7087-R2CA			16	8
29	TC40818P (CD4081BE)			14	7
30	TC40018P (CD4001BE)			14	7
31	μPD4053BP (CD4053BE)			16	8
32	MC14538BCP			16	8
33	TC40238P (CD4023BE)			14	7
34	MB7052-R4CA			16	8
35	MB7052-R5CA			16	8
36	TC40498P (CD4049BE)			16	8
37	TC40238P (CD4023BE)			14	7
38	TC40H193P			16	8
39	TC40H193P			16	8
40	TC40818P (CD4081BE)			14	7
41	MB7057-R2CA			16	8
42	SN74LS174N			16	8
43	TC40718P (CD4071BE)			14	7
44	TC40118P (CD4011BE)			14	7
45	TC40498P (CD4049BE)			16	8
46	MC14077BCP			14	7
47	TC40738P (CD4073BE)			14	7
48	SN74LS174N			16	8
49	SN74LS174N			16	8
50	TC40758P (CD4075BE)			14	7
51	TC40738P (CD4073BE)			14	7
52	TC40718P (CD4071BE)			14	7
53	TC40818P (CD4081BE)			14	7
54	TC45206P (MC14520BCP)			16	8
55	SN74LS174N			16	8
56	TC40569P (CD4056BE)			16	8
57	TC45206P (MC14520BCP)			16	8
58	TC45206P (MC14520BCP)			16	8
59	MC14551BCP			16	8
60	TC40158P (CD4015BE)			16	8
61	TC40158P (CD4015BE)			16	8

NEW
NTSC; # 20301 –
PS ; # 20201 –

*CHANGED

	NTSC:UP TO # 20499 PS :UP TO # 20399	NTSC:# 20501 & UP PS :# 20401 & UP
TP9	32 16 23 TO IC47-11	32 16 23 TP9 TO IC47-11
IC1, 3, 5, 6 7, 8, 10, 16	TL082CP	μPC4558C

REEL-2A REEL-2A

REEL-2A BOARD – *COMPONENT SIDE* –

FORMER
NTSC; # 20001 – 20299
PS ; # 20001 – 20199

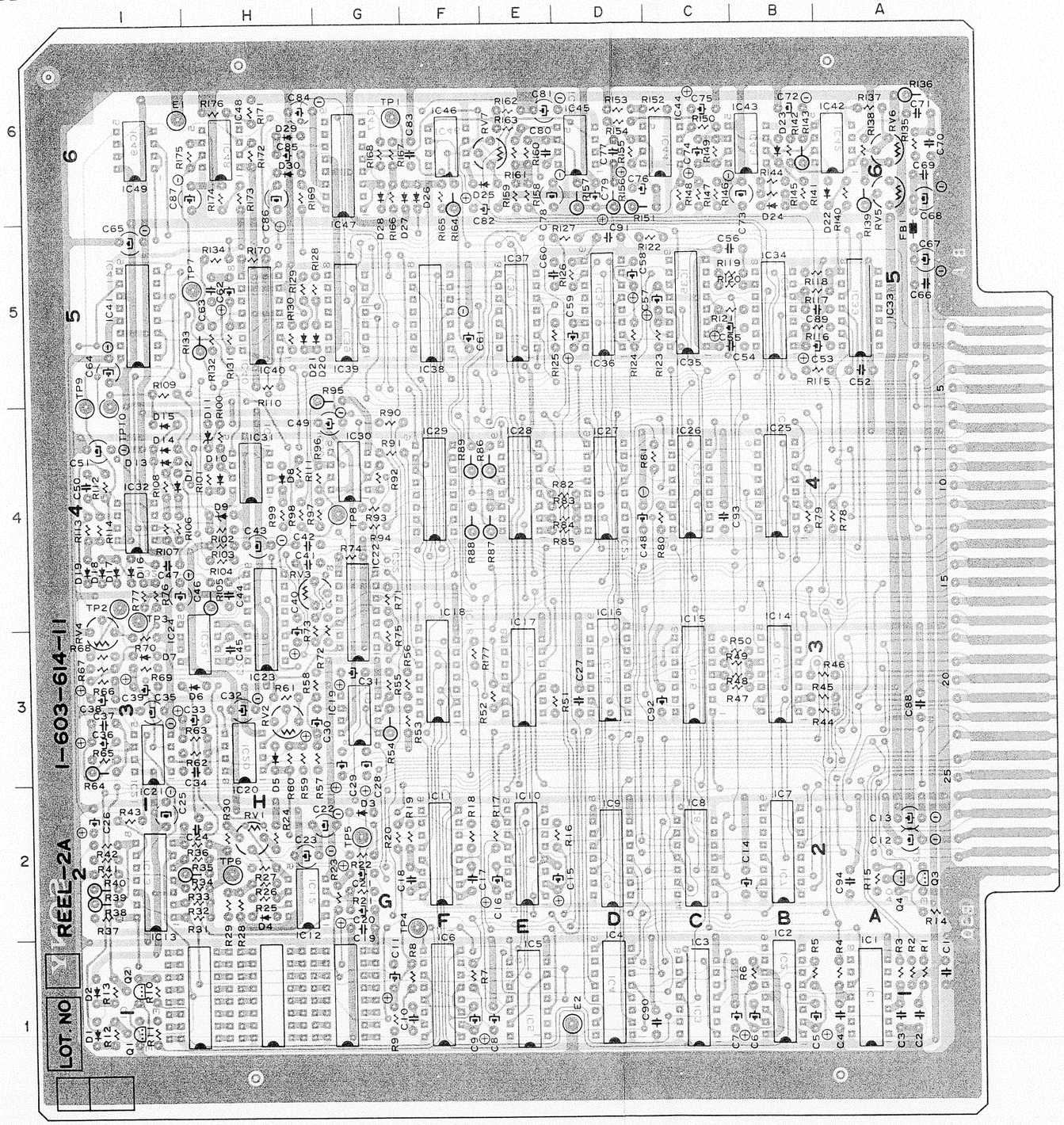

BVH-1100A (NTSC)
BVH-1100APS
BVH-1100APM
REEL-2A BOARD
1-603-614-11

D1	I - 1	IC26	C - 4		
D2	I - 1	IC27	D - 4		
D3	G - 2	IC28	E - 4		
D4	H - 2	IC29	F - 4		
D5	H - 3	IC30	G - 4		
D6	H - 3	IC31	H - 4		
D7	I - 3	IC32	I - 4		
D8	H - 4	IC33	A - 5		
D9	H - 4	IC34	B - 5		
D10	H - 4	IC35	C - 5		
D11	H - 4	IC36	D - 5		
D12	I - 4	IC37	E - 5		
D13	I - 4	IC38	F - 5		
D14	I - 4	IC39	G - 5		
D15	I - 4	IC40	H - 5		
D16	I - 4	IC41	I - 5		
D17	I - 4	IC42	A - 6		
D18	I - 4	IC43	B - 6		
D19	I - 4	IC44	C - 6		
D20	H - 5	IC45	D - 6		
D21	H - 5	IC46	F - 6		
D22	A - 6	IC47	G - 6		
D23	B - 6	IC48	H - 6		
D24	B - 6	IC49	I - 6		
D25	E - 6				
D26	F - 6	Q1	I - 1		
D27	F - 6	Q2	I - 1		
D28	G - 6	Q3	A - 2		
D29	H - 6	Q4	A - 1		
D30	H - 6				
D33	A - 3	RV1	H - 2		
		RV2	H - 3		
E1	I - 6	RV3	H - 4		
E2	D - 1	RV4	I - 3		
		RV5	A - 6		
IC1	A - 1	RV6	A - 6		
IC2	B - 1	RV7	E - 6		
IC3	C - 1				
IC4	D - 1	TP1	G - 6		
IC5	E - 1	TP2	I - 3		
IC6	F - 1	TP3	I - 3		
IC7	B - 2	TP4	F - 2		
IC8	C - 2	TP5	G - 2		
IC9	D - 2	TP6	H - 2		
IC10	E - 2	TP7	I - 5		
IC11	F - 2	TP8	G - 4		
IC12	H - 2	TP9	I - 5		
IC13	I - 2	TP10	I - 5		
IC14	B - 3				
IC15	C - 3				
IC16	D - 3				
IC17	E - 3				
IC18	F - 3				
IC19	G - 3				
IC20	H - 3				
IC21	I - 3				
IC22	G - 3				
IC23	H - 3				
IC24	H - 3				
IC25	B - 4				

FORMER
NTSC; # 20001 – 20299
PS ; # 20001 – 20199

REEL-2A BOARD

Reel Servo

FORMER
NTSC; # 20001 – 20299
PS ; # 20001 – 20199

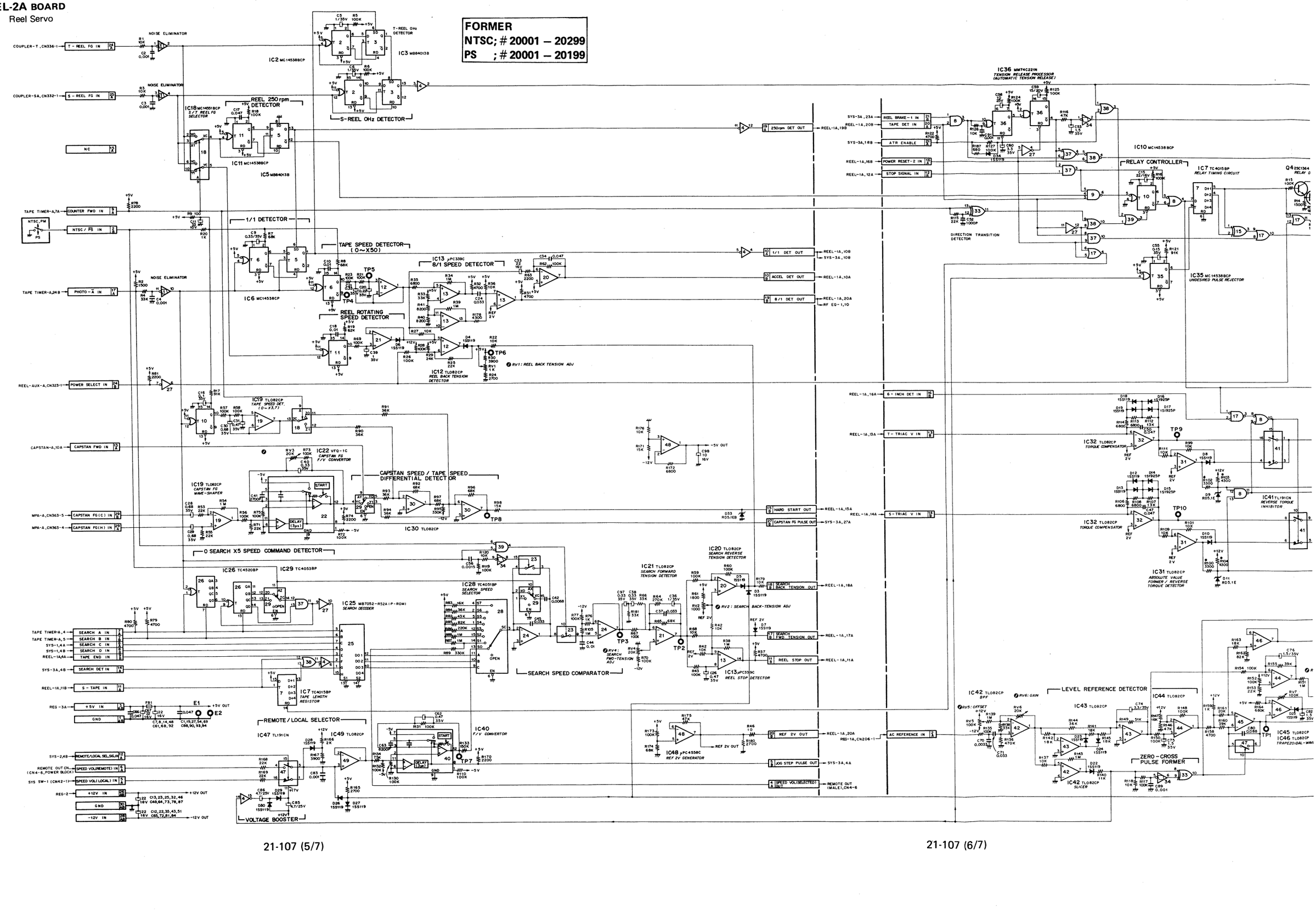

21-107 (5/7)

21-107 (6/7)

REEL-2A

FORMER
NTSC; # 20001 – 20299
PS ; # 20001 – 20199

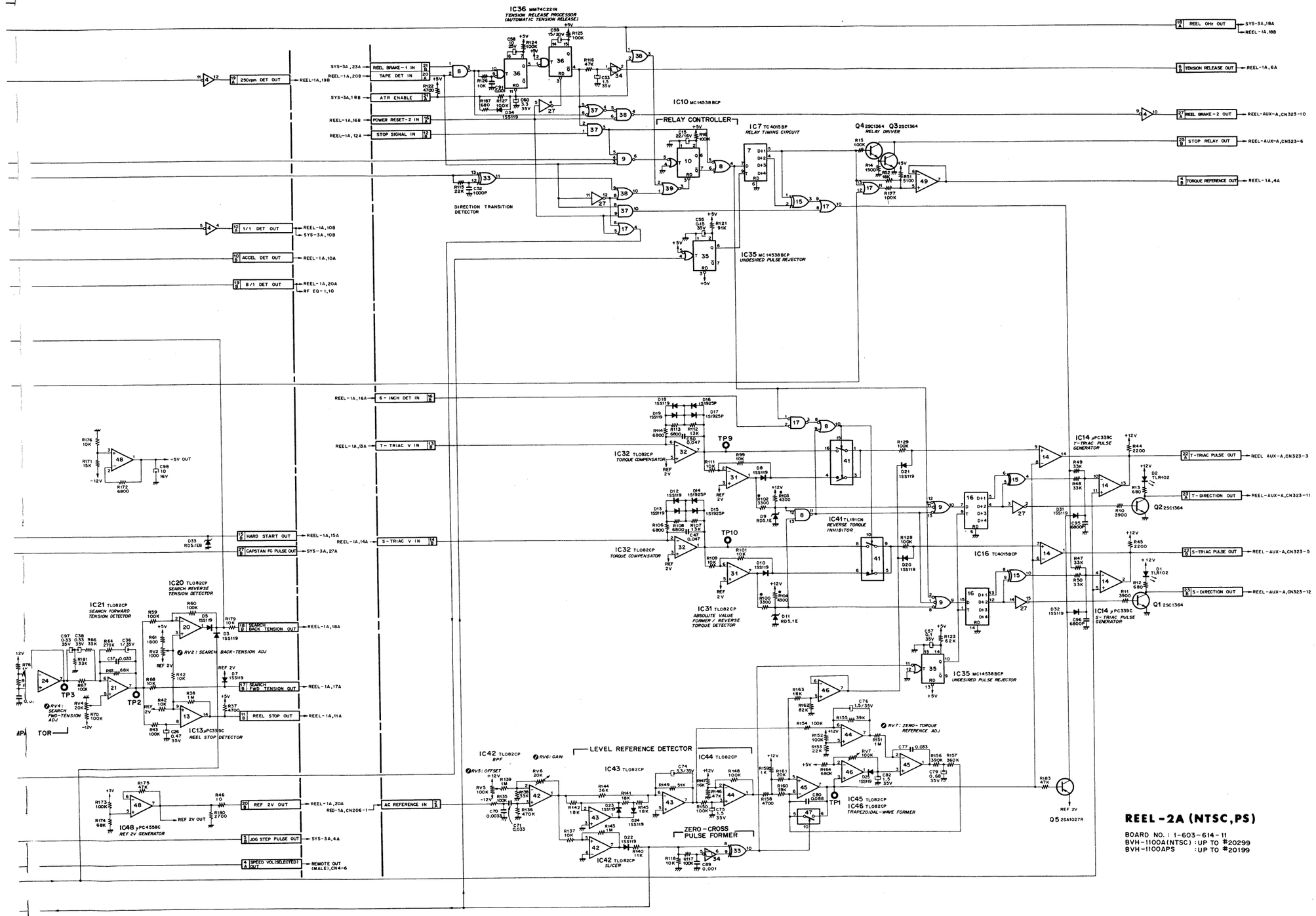

IC25
MB7052-R52A
PROGRAMMED DATA

WORD (ADDRESS)	DATA OUTPUTS (IN HEXADECIMAL)
0 – 15	2. 1. 1. 1. 2. B. C. C. 2. B. C. E. 2. B. C. F.
16 – 31	2. 1. 1. 1. 2. B. C. C. 2. B. C. C. 2. B. C. C.
32 – 47	2. 1. 1. 1. 2. B. C. C. 2. B. C. E. 2. B. C. E.
48 – 63	2. 1. 1. 1. 2. B. C. C. 2. B. C. C. 2. B. C. C.
64 – 79	2. 0. 0. 0. 2. B. C. C. 2. B. C. E. 2. B. C. F.
80 – 95	2. 0. 0. 0. 2. B. C. C. 2. B. C. C. 2. B. C. C.
96 – 111	2. 0. 0. 0. 2. B. C. C. 2. B. C. E. 2. B. C. E.
112 – 127	2. 0. 0. 0. 2. B. C. C. 2. B. C. C. 2. B. C. C.
128 – 143	2. 1. 1. 1. 2. B. C. C. 2. B. C. E. 2. B. C. F.
144 – 159	2. 1. 1. 1. 2. B. C. C. 2. B. C. C. 2. B. C. C.
160 – 175	2. 1. 1. 1. 2. B. C. C. 2. B. C. E. 2. B. C. E.
176 – 191	2. 1. 1. 1. 2. B. C. C. 2. B. C. C. 2. B. C. C.
192 – 207	2. 0. 0. 0. 2. B. C. C. 2. B. C. E. 2. B. C. F.
208 – 223	2. 0. 0. 0. 2. B. C. C. 2. B. C. C. 2. B. C. C.
224 – 239	2. 0. 0. 0. 2. B. C. C. 2. B. C. E. 2. B. C. E.
240 – 255	2. 0. 0. 0. 2. B. C. C. 2. B. C. C. 2. B. C. C.

REF. NO.	TYPE	+12V	–12V	+5V	–5V	GND
IC1	MC14584BCP			14	7	
2	MC14538BCP			16	8	
3	MB84013M (CD4013BE)			14	7	
4	TC4049BP (CD4049BE)			16	8	
5	MB84013M (CD4013BE)			14	7	
6	MC14538BCP			16	8	
7	TC4015BP (CD4015BE)			16	8	
8	TC4011BP (CD4011BE)			14	7	
9	TC4023BP (CD4023BE)			14	7	
10	MC14538BCP			16	8	
11	MC14538BCP			16	8	
12	TL082CP	8	4			
13	μPC339C			3	12	
14	μPC339C			3	12	
15	TC4030BP (CD4030BE)			14	7	
16	TC4015BP (CD4015BE)			16	8	
17	TC4071BP (CD4071BE)			14	7	
18	MC14551BCP			16	8	
19	TL082CP	8	4			
20	TL082CP	8	4			
21	TL082CP	8	4			
22	VFO-1C			14	9, 6	7, 4
23	TL191CN	11	14	12	13	
24	TL082CP	8	4			
25	MB7052-R52A			16	8	
26	TC4520BP (MC14520BCP)			16	8	
27	TC4049BP (CD4049BE)			16	8	
28	TC4051BP (CD4051BE)			16	8	
29	μPD4053BC (CD4053BE)			16	8	
30	TL082CP	8	4			
31	TL082CP	8	4			
32	TL082CP	8	4			
33	TC4030BP (CD4030BE)			14	7	
34	MC14584BCP			14	7	
35	MC14584BCP			14	7	
36	MM74C221N			16	8	
37	TC4081BP (CD4081BE)			14	7	
38	TC4071BP (CD4071BE)			14	7	
39	TC4001BP (CD4001BE)			14	7	
40	VFO-1C			14	9, 6	7, 4
41	TL191CN	11	14	12	13	
42	TL082CP	8	4			
43	TL082CP	8	4			
44	TL082CP	8	4			
45	TL082CP	8	4			
46	TL082CP	8	4			
47	TL191CN	(+17V) 11	14	12	13	
48	μPC4558C	8	4			
49	TL082CP	8	4			

• CHANGED

	NTSC : UP TO #20999 PS : UP TO #20099	NTSC : #20201 & UP PS : #20101 & UP
R100 R102	56K	3300
R103 R104	100K	4300

REEL-2A (NTSC,PS)

BOARD NO. : 1-603-614-11
BVH-1100A(NTSC) : UP TO #20299
BVH-1100APS : UP TO #20199

REEL-2A BOARD — *COMPONENT SIDE* —

NEW
NTSC; # 20301 –
PS ; # 20201 –

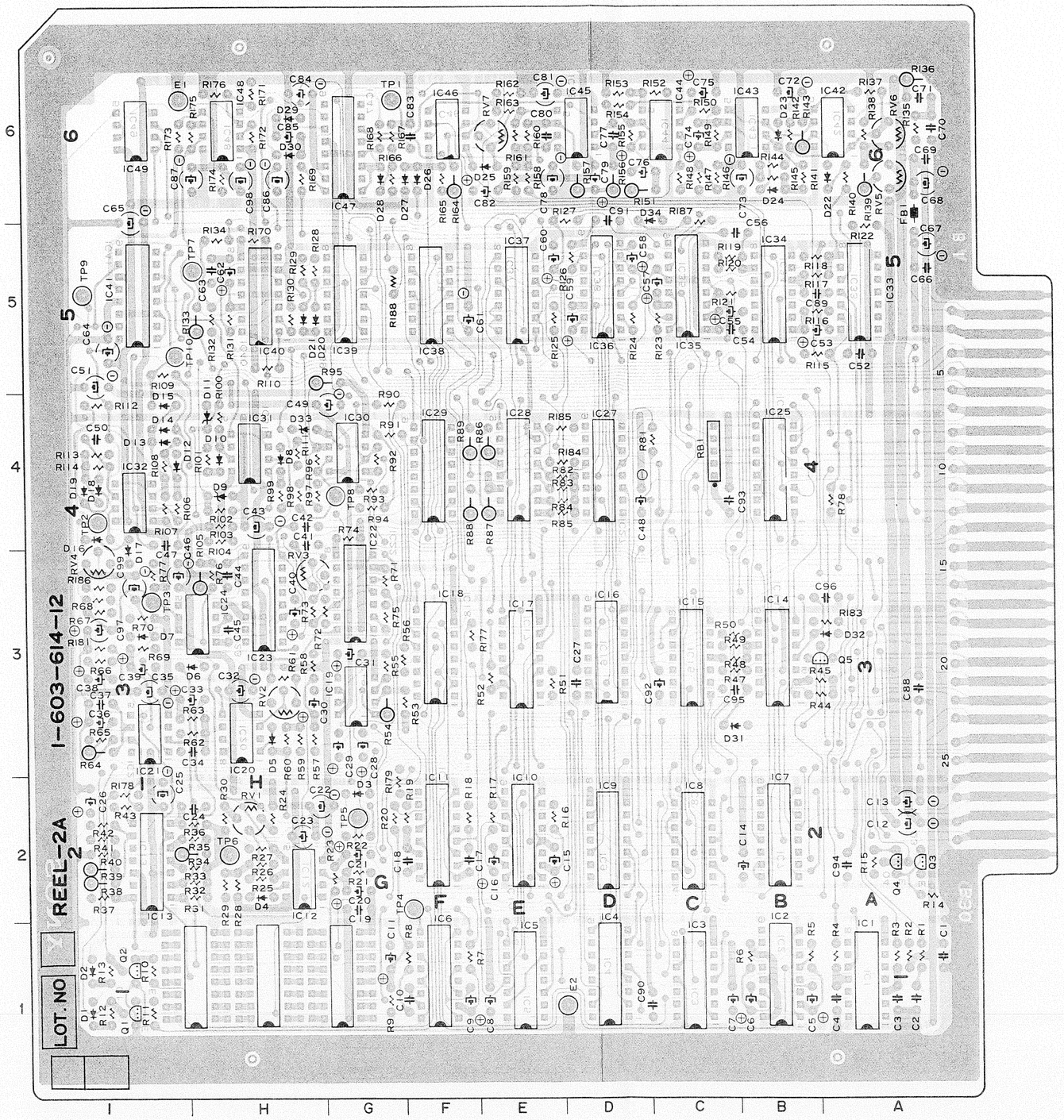

BVH-1100A (NTSC)
BVH-1100APS
BVH-1100APM
REEL-2A BOARD
1-603-614-12

D1	I - 1	Q1	I - 1		
D2	I - 1	Q2	I - 1		
D3	G - 2	Q3	A - 2		
D4	H - 2	Q4	A - 2		
D5	H - 3	Q5	A - 3		
D6	H - 3				
D7	I - 3	RV1	H - 2		
D8	H - 4	RV2	H - 3		
D9	H - 4	RV3	H - 3		
D10	H - 4	RV4	I - 3		
D11	H - 4	RV5	A - 6		
D12	I - 4	RV6	A - 6		
D13	I - 4	RV7	E - 6		
D14	I - 4				
D15	I - 4	TP1	G - 6		
D16	I - 4	TP2	I - 4		
D17	I - 4	TP3	I - 3		
D18	I - 4	TP4	F - 2		
D19	I - 4	TP5	G - 2		
D20	H - 5	TP6	H - 2		
D21	H - 5	TP7	H - 5		
D22	A - 6	TP8	G - 4		
D23	B - 6	TP9	I - 5		
D24	B - 6	TP10	I - 5		
D25	E - 6				
D26	F - 6				
D27	F - 6				
D28	G - 6				
D29	H - 6				
D30	H - 6				
D31	C - 3				
D32	A - 3				
D33	H - 4				
D34	C - 6				
E1	I - 6				
E2	D - 1				
IC1	A - 1				
IC2	B - 1				
IC3	C - 1				
IC4	D - 1				
IC5	E - 1				
IC6	F - 1				
IC7	B - 2				
IC8	C - 2				
IC9	D - 2				
IC10	E - 2				
IC11	F - 2				
IC12	H - 2				
IC13	I - 2				
IC14	B - 3				
IC15	C - 3				
IC16	D - 3				
IC17	E - 3				
IC18	F - 3				
IC19	G - 3				
IC20	H - 3				
IC21	I - 3				
IC22	G - 3				
IC23	H - 3				
IC24	H - 3				
IC25	B - 4				
IC27	D - 4				
IC28	E - 4				
IC29	F - 4				
IC30	G - 4				
IC31	H - 4				
IC32	I - 4				
IC33	A - 5				
IC34	B - 5				
IC35	C - 5				
IC36	D - 5				
IC37	E - 5				
IC38	F - 5				
IC39	G - 5				
IC40	H - 5				
IC41	I - 5				
IC42	A - 6				
IC43	B - 6				
IC44	C - 6				
IC45	D - 6				
IC46	F - 6				
IC47	G - 6				
IC48	H - 6				
IC49	I - 6				

NEW
NTSC; # 20301 –
PS ; # 20201 –

REEL-2A BOARD

Reel Servo

NEW
NTSC; # 20301 –
PS ; # 20201 –

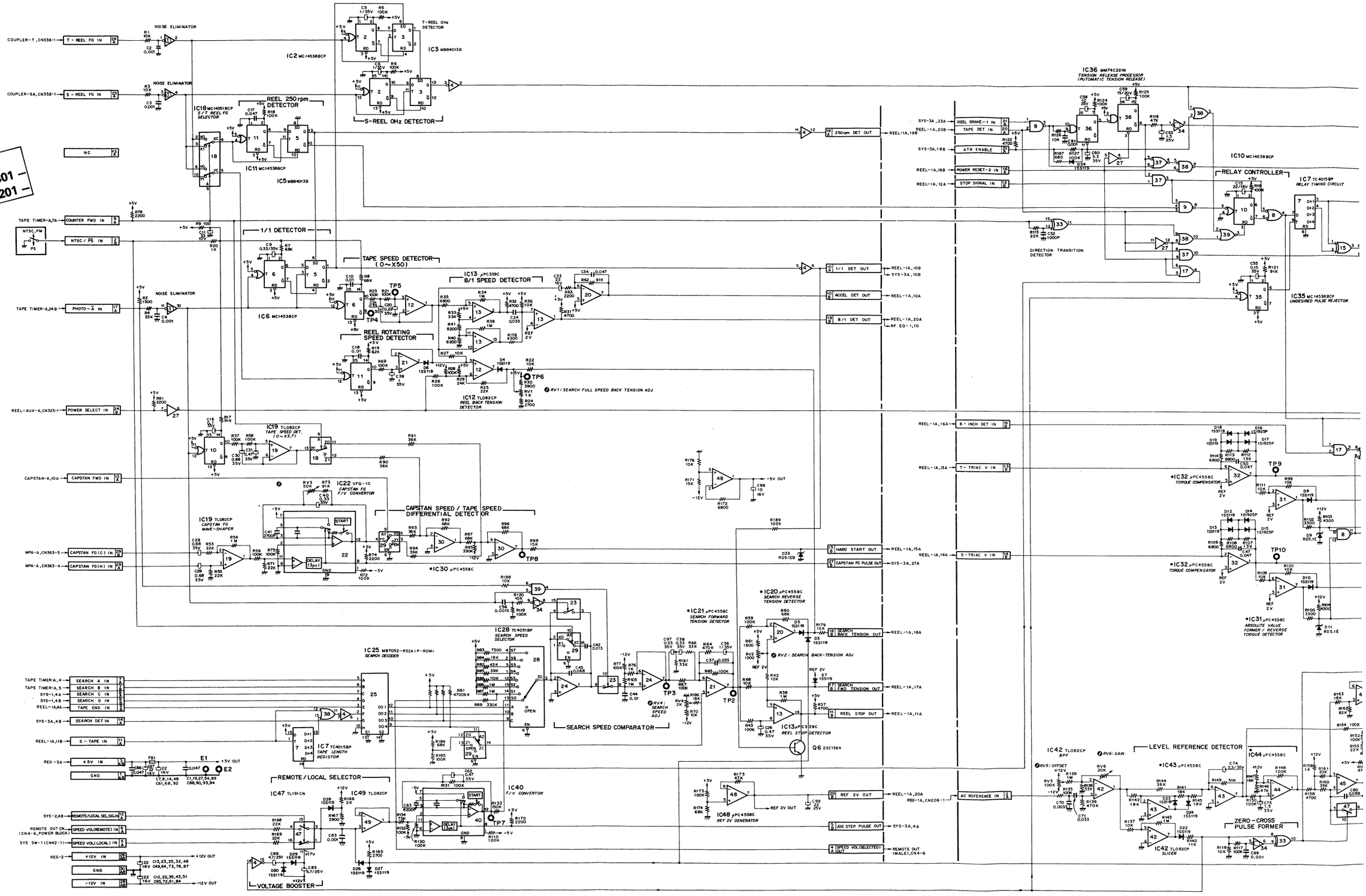

REEL-2A

NEW
NTSC; # 20301 –
PS ; # 20201 –

IC36 MM74C221N
TENSION RELEASE PROCESSOR
(PUTOMATIC TENSION RELEASE)

IC10 MC14538BCP
RELAY CONTROLLER

IC7 TC4015BP
RELAY TIMING CIRCUIT

Q4 2SC1364 Q3 2SC1364
RELAY DRIVER

DIRECTION TRANSITION DETECTOR

IC35 MC14538BCP
UNDESIRED PULSE REJECTOR

IC25
MB7052-R52A
PROGRAMMED DATA

WORD (ADDRESS)	DATA OUTPUTS (IN HEXADECIMAL)
0 – 15	2. 1. 1. 1. 2. B. C. C. 2. B. C. E. 2. B. C. F.
16 – 31	2. 1. 1. 1. 2. B. C. C. 2. B. C. C. 2. B. C. C.
32 – 47	2. 1. 1. 1. 2. B. C. C. 2. B. C. E. 2. B. C. E.
48 – 63	2. 1. 1. 1. 2. B. C. C. 2. B. C. C. 2. B. C. C.
64 – 79	2. 0. 0. 0. 2. B. C. C. 2. B. C. E. 2. B. C. F.
80 – 95	2. 0. 0. 0. 2. B. C. C. 2. B. C. C. 2. B. C. C.
96 – 111	2. 0. 0. 0. 2. B. C. C. 2. B. C. E. 2. B. C. E.
112 – 127	2. 0. 0. 0. 2. B. C. C. 2. B. C. C. 2. B. C. C.
128 – 143	2. 1. 1. 1. 2. B. C. C. 2. B. C. E. 2. B. C. F.
144 – 159	2. 1. 1. 1. 2. B. C. C. 2. B. C. C. 2. B. C. C.
160 – 175	2. 1. 1. 1. 2. B. C. C. 2. B. C. E. 2. B. C. E.
176 – 191	2. 1. 1. 1. 2. B. C. C. 2. B. C. C. 2. B. C. C.
192 – 207	2. 0. 0. 0. 2. B. C. C. 2. B. C. E. 2. B. C. F.
208 – 223	2. 0. 0. 0. 2. B. C. C. 2. B. C. C. 2. B. C. C.
224 – 239	2. 0. 0. 0. 2. B. C. C. 2. B. C. E. 2. B. C. E.
240 – 255	2. 0. 0. 0. 2. B. C. C. 2. B. C. C. 2. B. C. C.

REF. NO.	TYPE
IC1	MC14584BCP
2	MC14538BCP
3	MB84013M
4	TC4049BP (CD4049BE)
5	MB84013M
6	MC14538BCP
7	TC4015BP (CD4015BE)
8	TC4011BP (CD4011BE)
9	TC4023BP (CD4023BE)
10	MC14538BCP
11	MC14538BCP
12	TL082CP
13	μPC339C
14	μPC339C
15	TC4030BP (CD4030BE)
16	TC4015BP (CD4015BE)
17	TC4071BP (CD4071BE)
18	MC14551BCP
19	TL082CP
20	μPC4558C (RC4558)
21	μPC4558C (RC4558)
22	VFO-1C
23	TL191CN
24	TL082CP
25	MB7052-R52A
27	TC4049BP (CD4049BE)
28	TC4051BP (CD4051BE)
29	μPD4053BC (CD4053BE)
30	μPC4558C (RC4558)
31	μPC4558C (RC4558)
32	μPC4558C (RC4558)
33	TC4030BP (CD4030BE)
34	MC14584BCP
35	MC14538BCP
36	MM74C221N
37	TC4081BP (CD4081BE)
38	TC4071BP (CD4071BE)
39	TC4001BP (CD4001BE)
40	VFO-1C
41	TL191CN
42	TL082CP
43	μPC4558C (RC4558)
44	μPC4558C (RC4558)
45	TL082CP
46	μPC4558C (RC4558)
47	TL191CN
48	μPC4558C
49	TL082CP

• CHANGED

	NTSC : UP TO # 20499 PS : UP TO # 20399	NTSC : #20501 & UP PS : #20401 & UP
IC 20, 21 30, 31, 32 43, 44, 46	TL082CP	μPC4558C
R164	680K	470K

*RV1: SEARCH FULL SPEED BACK TENSION ADJ

IC21 μPC4558C
SEARCH FORWARD TENSION DETECTOR

IC20 μPC4558C
SEARCH REVERSE TENSION DETECTOR

RV2: SEARCH BACK-TENSION ADJ

RV4: SEARCH SPEED ADJ

SEARCH SPEED COMPARATOR

IC13 μPC339C
REEL STOP DETECTOR

Q6 2SC1364

IC48 μPC4558C
REF 2V GENERATOR

IC42 TL082CP
BPF

RV5: OFFSET

RV6: GAIN

LEVEL REFERENCE DETECTOR

IC43 μPC4558C

IC44 μPC4558C

IC42 TL082CP
SLICER

ZERO-CROSS PULSE FORMER

IC45 TL082CP
IC46 μPC4558C
TRAPEZOIDAL-WAVE FORMER

RV7: ZERO-TORQUE REFERENCE ADJ

IC14 μPC339C
T-TRIAC PULSE GENERATOR

IC14 μPC339C
S-TRIAC PULSE GENERATOR

IC16 TC4015BCP

IC41 TL191CN
REVERSE TORQUE INHIBITOR

IC32 μPC4558C
TORQUE COMPENSATOR

IC31 μPC4558C
ABSOLUTE VALUE FORMER / REVERSE TORQUE DETECTOR

Q2 2SC1364

Q1 2SC1364

Q5 2SA1027R

REF 2V

TP1 TP2 TP3 TP9 TP10

REEL-1A,19B ← 250rpm DET OUT
SYS-3A,23A → REEL BRAKE-1 IN
REEL-1A,20B → TAPE DET IN
SYS-3A,18B → ATR ENABLE
REEL-1A,16B → POWER RESET-2 IN
REEL-1A,12A → STOP SIGNAL IN
REEL-1A,10B ← 1/1 DET OUT
SYS-3A,10B
REEL-1A,10A ← ACCEL DET OUT
REEL-1A,20A ← B/1 DET OUT
RF EQ-1,1C
REEL-1A,16A → 6-INCH DET IN
REEL-1A,13A → T-TRIAC V IN
REEL-1A,15A ← HARD START OUT
REEL-1A,14A → S-TRIAC V IN
SYS-3A,27A ← CAPSTAN FG PULSE OUT
REEL-1A,18A ← SEARCH BACK TENSION OUT
REEL-1A,17A ← SEARCH FWD TENSION OUT
REEL-1A,11A ← REEL STOP OUT
REEL-1A,20A ← REF 2V OUT
RES-1A,CN206-1 → AC REFERENCE IN
SYS-3A,4A ← JOG STEP PULSE OUT
REMOTE OUT (MALE),CN4-6 ← SPEED VOL(SELECTED) OUT

SYS-3A,18A ← REEL OHz OUT
REEL-1A,18B
REEL-1A,6A ← TENSION RELEASE OUT
REEL-AUX-A,CN323-10 ← REEL BRAKE-2 OUT
REEL-AUX-A,CN323-6 ← STOP RELAY OUT
REEL-1A,4A ← TORQUE REFERENCE OUT
REEL AUX-A,CN323-3 ← T-TRIAC PULSE OUT
REEL-AUX-A,CN323-11 ← T-DIRECTION OUT
REEL-AUX-A,CN323-5 ← S-TRIAC PULSE OUT
REEL-AUX-A,CN323-12 ← S-DIRECTION OUT

REEL-2A

BVH-1100A(NTSC) : # 20301 & UP
BVH-1100APS : # 20201 & UP
BVH-1100APM : # 20001 & UP

BOARD NO. : 1-603-614-12

REEL AUX-A BOARD – *COMPONENT SIDE* –

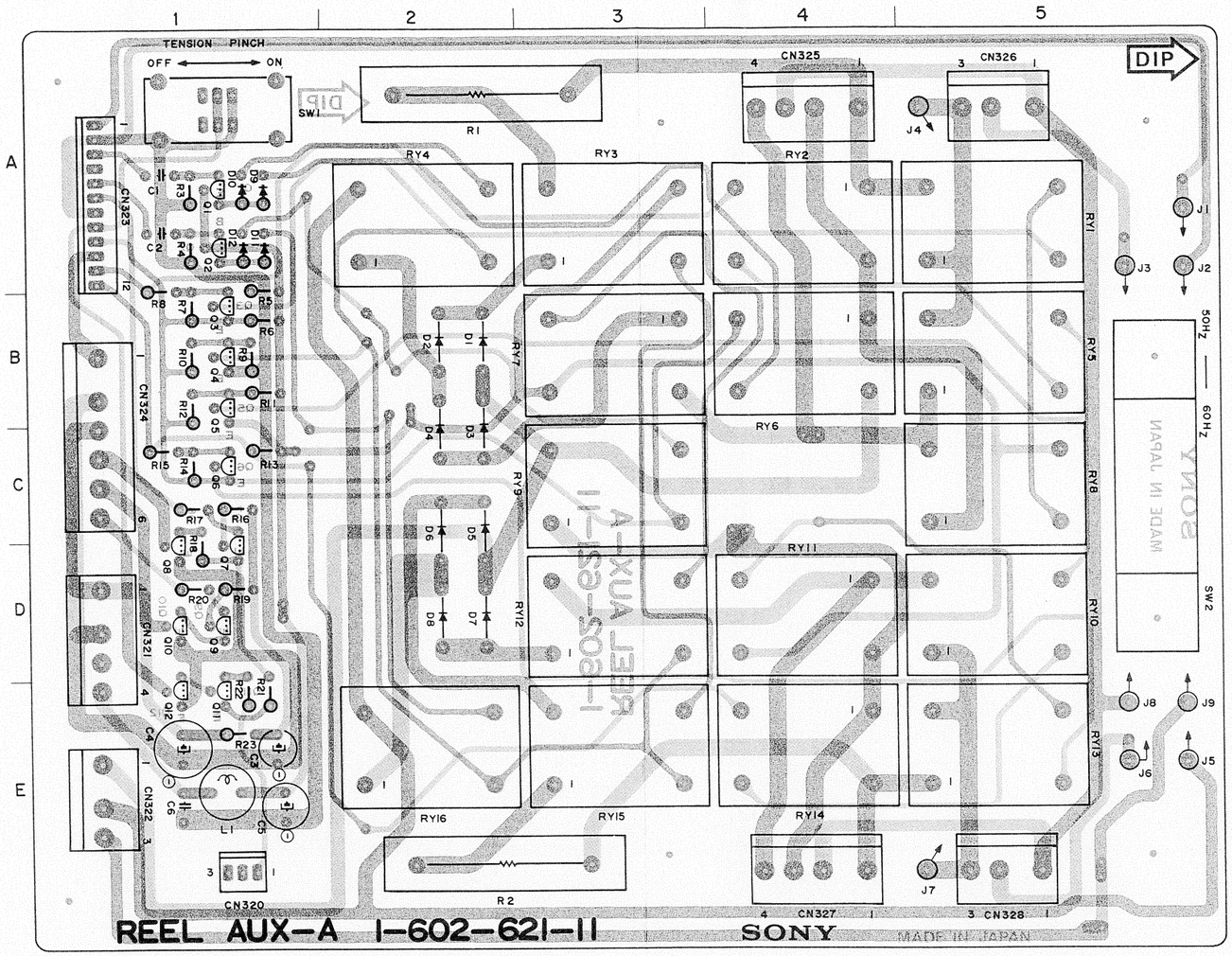

BVH-1100A (NTSC)
BVH-1100APS
BVH-1100APM
REEL AUX-A BOARD
1-602-621-11

D1	B - 2
D2	B - 2
D3	C - 2
D4	C - 2
D5	C - 2
D6	C - 2
D7	D - 2
D8	D - 2
D9	A - 1
D10	A - 1
D11	A - 1
D12	A - 1
Q1	A - 1
Q2	A - 1
Q3	B - 1
Q4	B - 1
Q5	B - 1
Q6	C - 1
Q7	D - 1
Q8	C - 1
Q9	C - 1
Q10	C - 1
Q11	F - 1
Q12	F - 1
SW1	A - 1
SW2	D - 5

REEL AUX-A BOARD

Supply/Take-up Reel Motor Control
Solenoid Driver

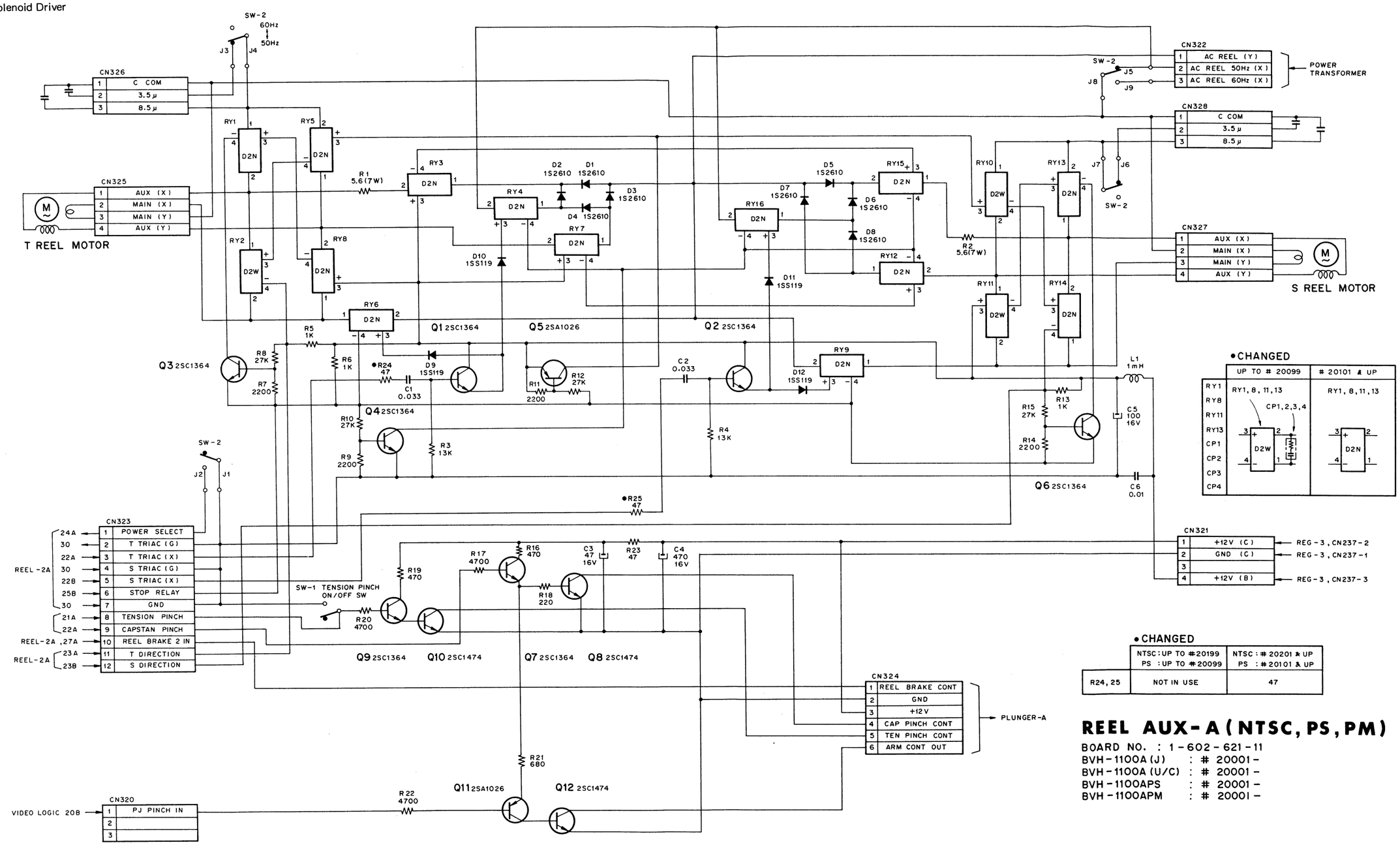

•CHANGED

	NTSC : UP TO #20199 PS : UP TO #20099	NTSC : #20201 & UP PS : #20101 & UP
R24, 25	NOT IN USE	47

REEL AUX-A (NTSC, PS, PM)

BOARD NO. : 1-602-621-11
BVH-1100A (J) : # 20001-
BVH-1100A (U/C) : # 20001-
BVH-1100APS : # 20001-
BVH-1100APM : # 20001-

REG-1A BOARD – *COMPONENT SIDE* –

FORMER
NTSC; # 20001 – 20599
PS ; # 20001 – 20499

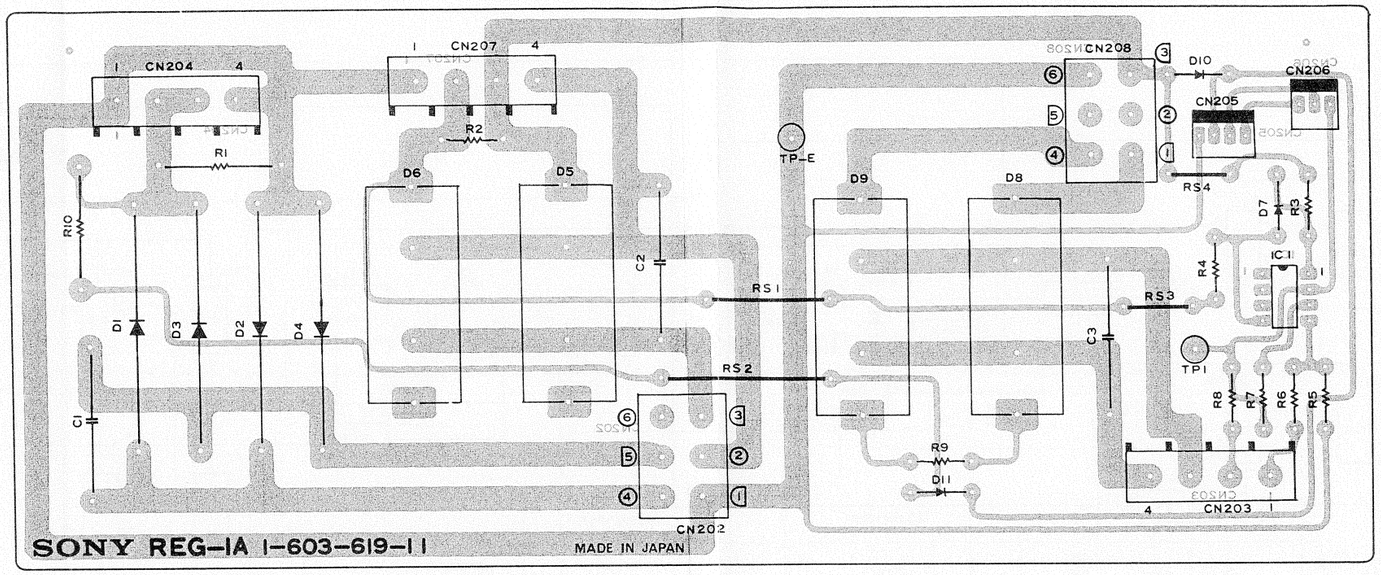

FORMER
NTSC; # 20001 – 20599
PS ; # 20001 – 20499

REG-1A BOARD – *COMPONENT SIDE* –

NEW
NTSC; # 20601 –
PS ; # 20501 –

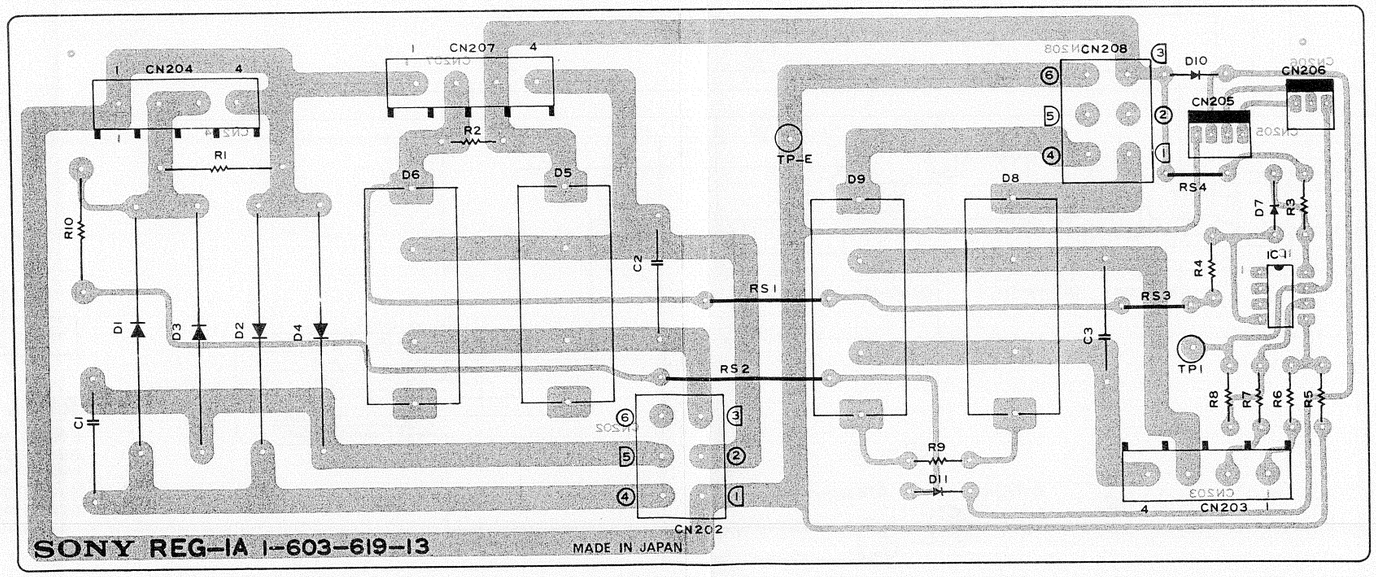

NEW
NTSC; # 20601 –
PS ; # 20501 –

REG-1A BOARD

+110V/+18V/–18V/+10V Rectifier

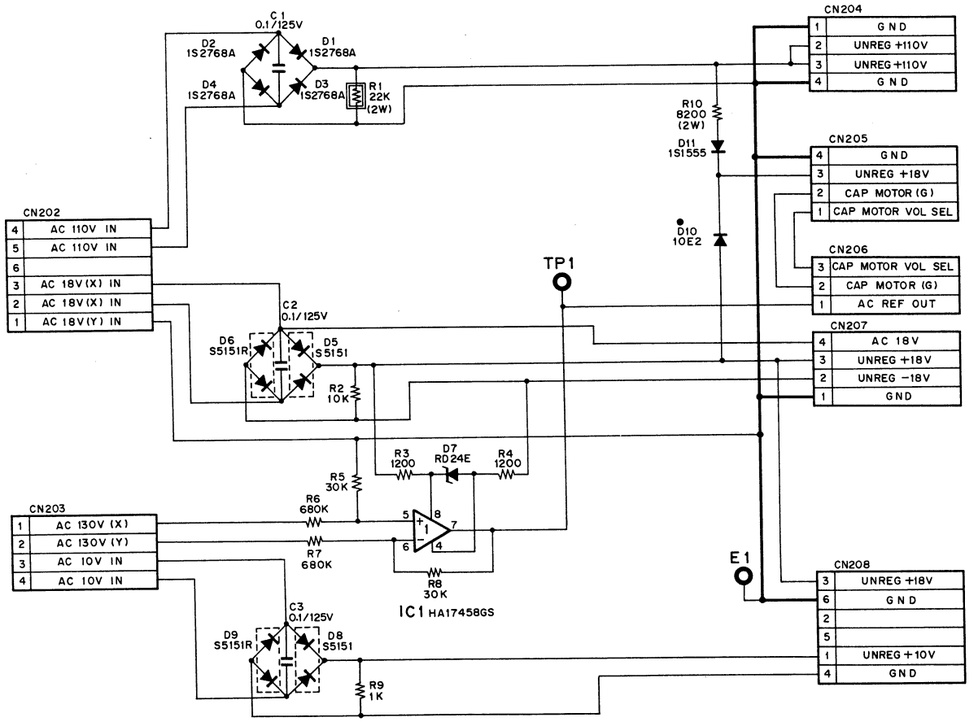

•CHANGED

	UP TO # 20099	# 20101 & UP
D10	1S1555	10E2

REG-1A(NTSC,PS,PM)

BOARD NO. : 1-603-613-11, -12
BVH-1100A(J) : # 20001 -
BVH-1100A(U/C) : # 20001 -
BVH-1100APS : # 20001 -
BVH-1100APM : # 20001 -

REG-2 BOARD — *COMPONENT SIDE* —

FORMER
20001 – 20599

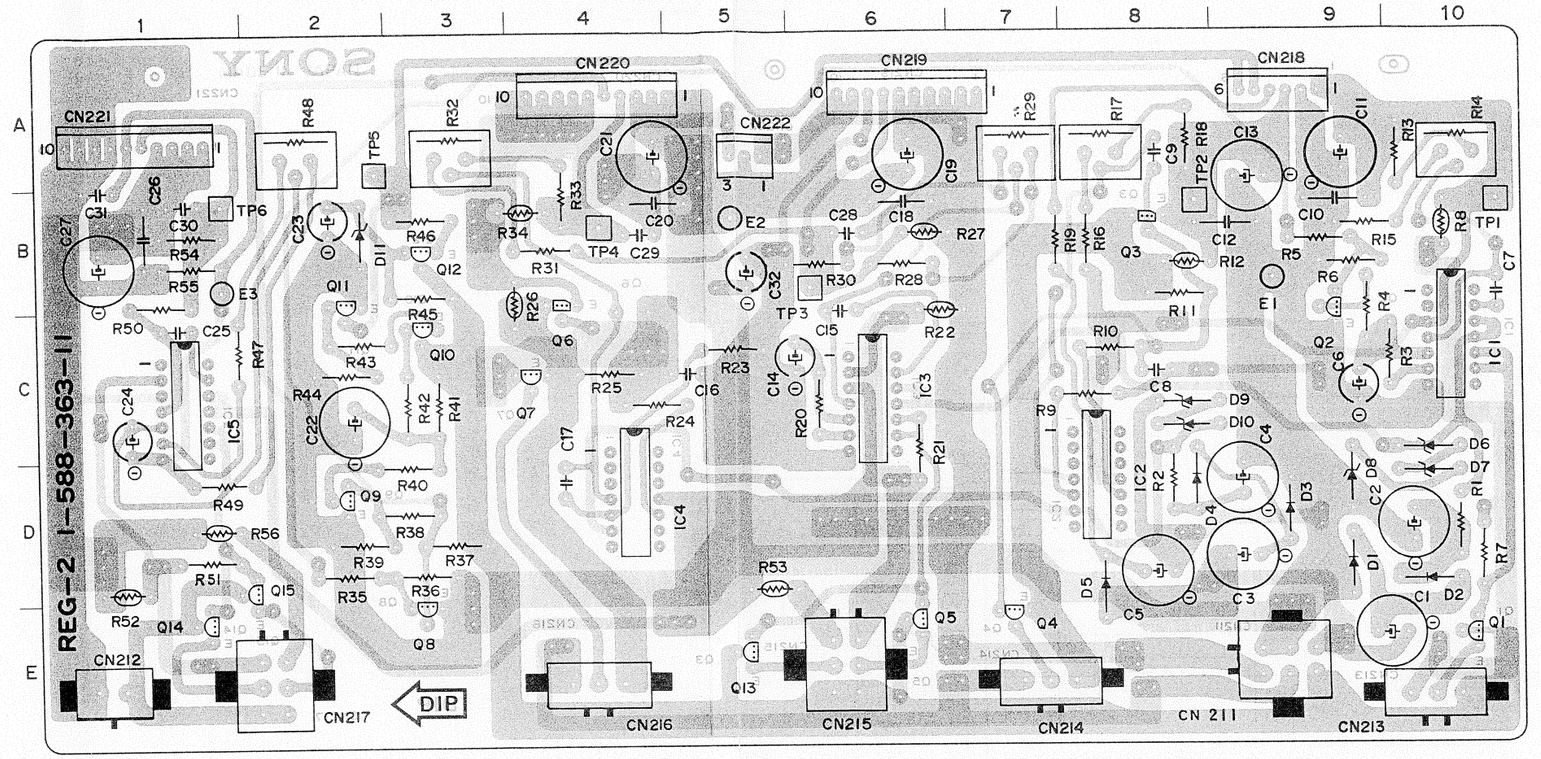

BVH-1100A (NTSC)
BVH-1100APS
REG-2 BOARD
1-588-363-11

D1 D - 9
D2 D - 10
D3 D - 9
D4 D - 8
D5 D - 8
D6 C - 10
D7 D - 10
D8 D - 9
D9 C - 8
D10 C - 8
D11 B - 2

E1 B - 9
E2 B - 5
E3 B - 1

IC1 C - 10
IC2 D - 8
IC3 C - 6
IC4 D - 4
IC5 C - 1

Q1 E - 10
Q2 B - 9
Q3 B - 8
Q4 E - 7
Q5 E - 6
Q6 B - 4
Q7 C - 4
Q8 E - 3
Q9 D - 2
Q10 C - 3
Q11 B - 2
Q12 B - 3
Q13 E - 5
Q14 E - 1
Q15 D - 2

R14 A - 10
R17 A - 8
R29 A - 7
R32 A - 3
R48 A - 2

TP1 B - 10
TP2 B - 8
TP3 B - 6
TP4 B - 4
TP5 A - 2
TP6 B - 1

FORMER
20001 – 20599

REG-2 BOARD — *COMPONENT SIDE* —

NEW
20601 –

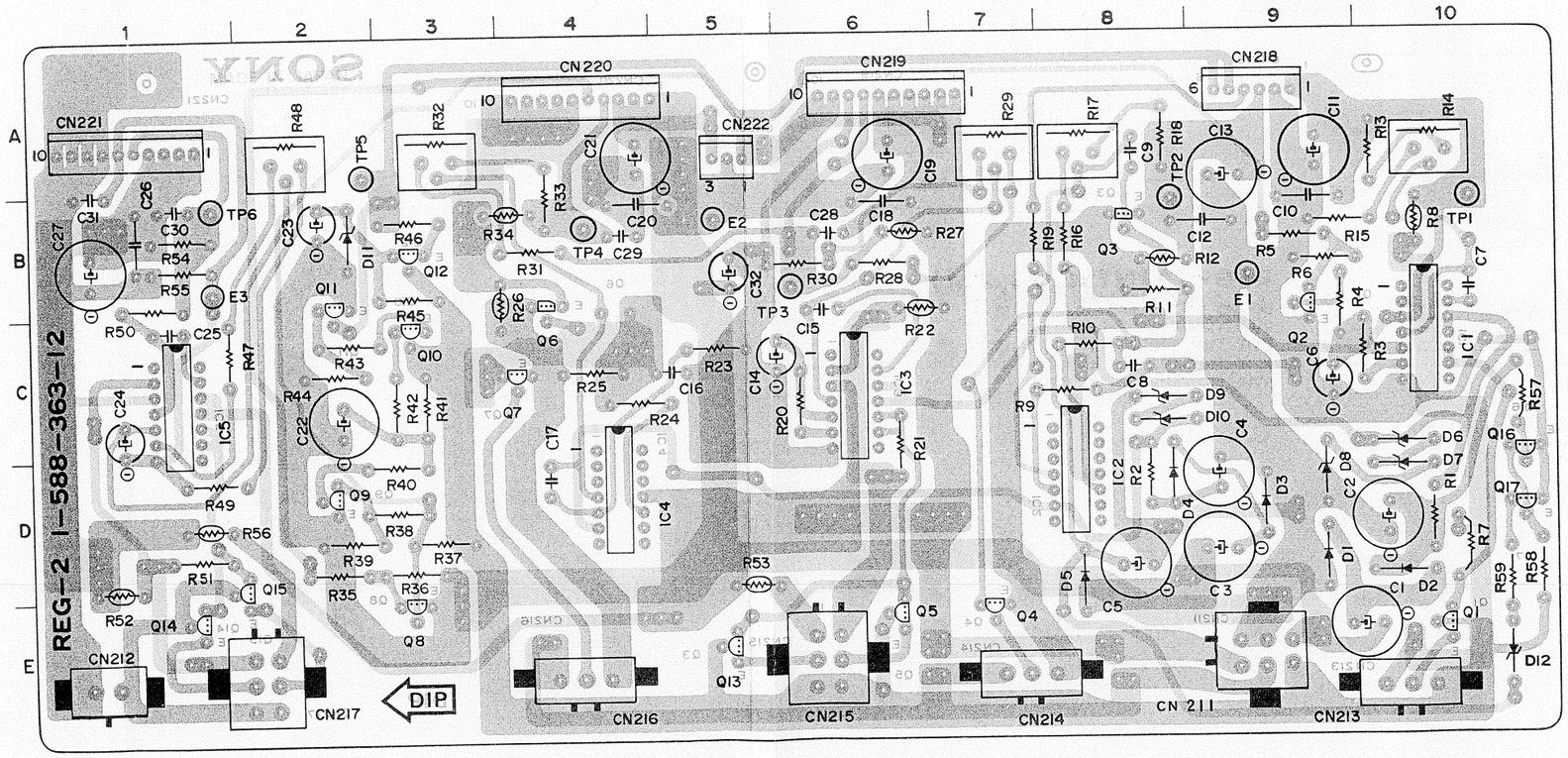

BVH-1100A (NTSC)
BVH-1100APS
BVH-1100APM
REG-2 BOARD
1-588-363-12

D1 D - 9
D2 D - 10
D3 D - 9
D4 D - 8
D5 D - 8
D6 C - 10
D7 D - 10
D8 D - 9
D9 C - 8
D10 C - 8
D11 B - 2
D12 E - 10

E1 B - 9
E2 B - 5
E3 B - 1

IC1 C - 10
IC2 D - 8
IC3 C - 6
IC4 D - 4
IC5 C - 1

Q1 E - 10
Q2 C - 9
Q3 B - 8
Q4 E - 7
Q5 E - 6
Q6 C - 4
Q7 C - 4
Q8 E - 3
Q9 D - 2
Q10 C - 3
Q11 B - 2
Q12 B - 3
Q13 E - 5
Q14 E - 1
Q15 D - 2
Q16 D - 10
Q17 D - 10

R14 A - 10
R17 A - 8
R29 A - 7
R32 A - 3
R48 A - 2

TP1 B - 10
TP2 B - 8
TP3 B - 6
TP4 B - 4
TP5 A - 2
TP6 B - 1

NEW
20601 –

REG-2 BOARD

+12V/–12V/+5V Regulator

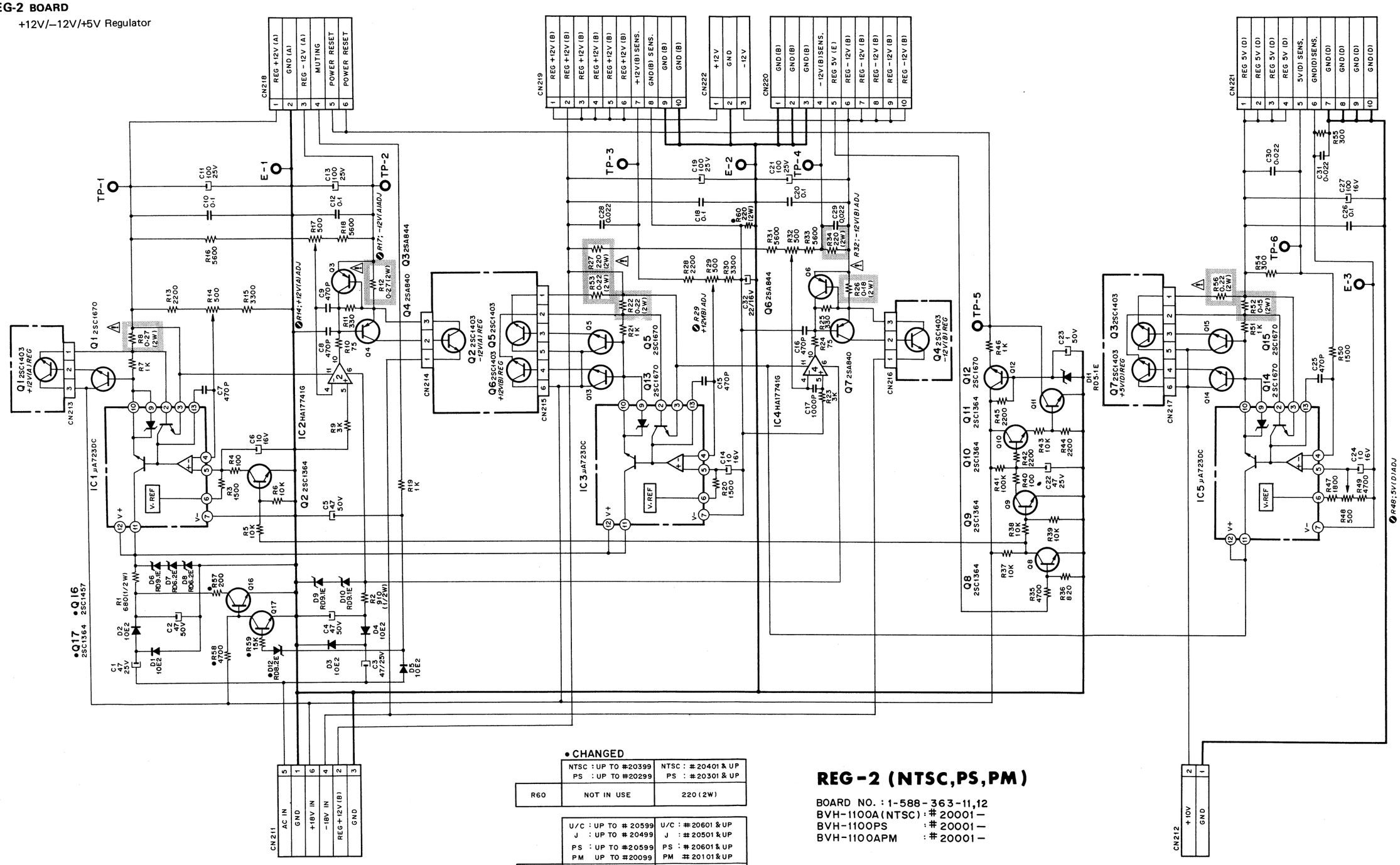

• CHANGED

	NTSC : UP TO #20399 PS : UP TO #20299	NTSC : #20401 & UP PS : #20301 & UP
R60	NOT IN USE	220(2W)

	U/C : UP TO #20599 J : UP TO #20499 PS : UP TO #20599 PM UP TO #20099	U/C : #20601 & UP J : #20501 & UP PS : #20601 & UP PM #20101 & UP
D12 Q16,17 R57, 58, 59	NOT IN USE	ADDED

REG-2 (NTSC,PS,PM)

BOARD NO. : 1-588-363-11,12
BVH-1100A(NTSC) : #20001—
BVH-1100PS : #20001—
BVH-1100APM : #20001—

REG-3A BOARD – *COMPONENT SIDE* –

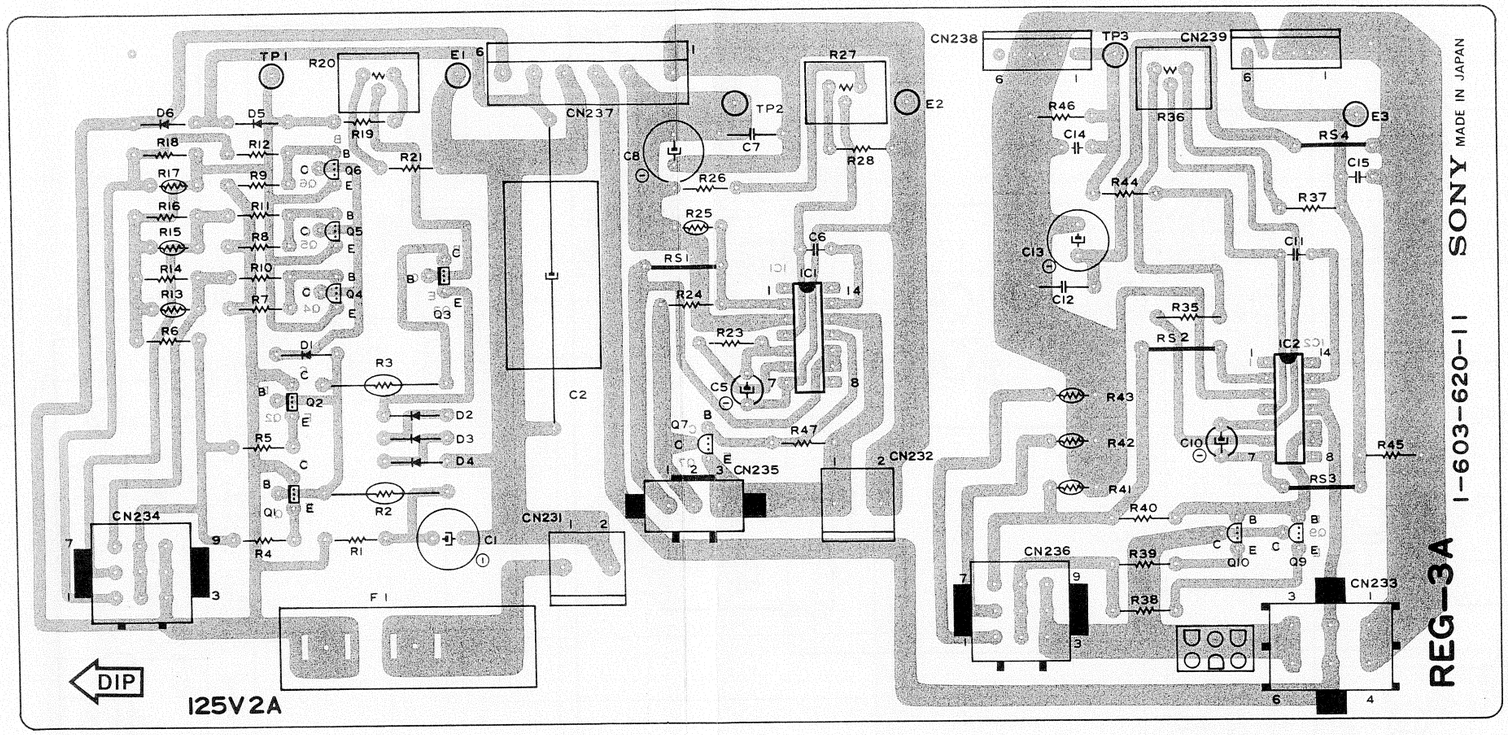

REG-3A BOARD

+90V/+12V/+5V Regulator

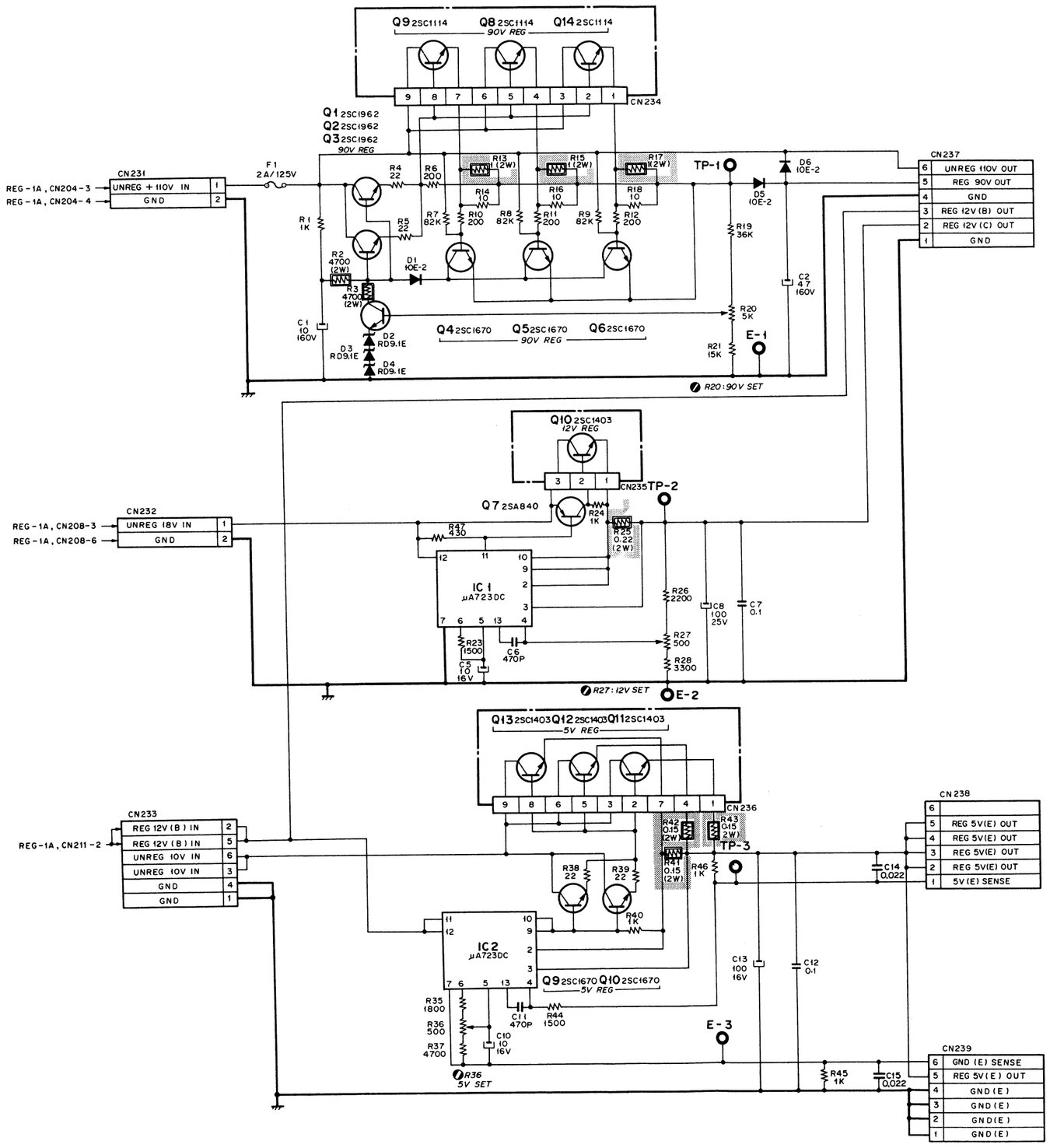

REG-3A(NTSC,PS,PM)

BOARD NO.: 1-603-620-11

BVH-1100A(J) : # 20001 -
BVH-1100A(U/C) : # 20001 -
BVH-1100APS : # 20001 -
BVH-1100APM : # 20001 -

RF EQ-1 BOARD – *COMPONENT SIDE* –

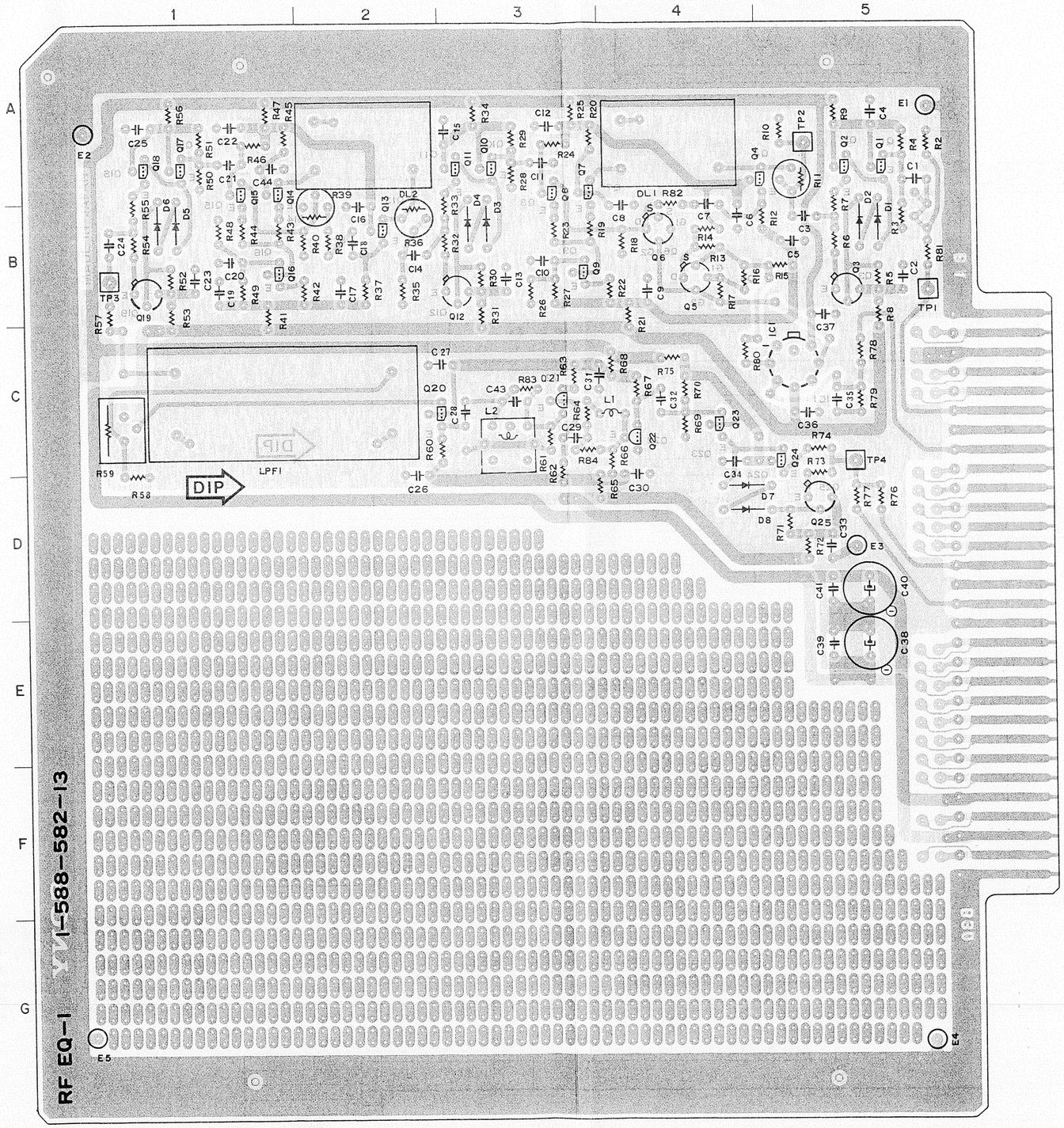

BVH-1100A (NTSC)
BVH-1100APS
BVH-1100APM
RF EQ-1 BOARD
1-588-582-13

D1 B - 5
D2 B - 5
D3 B - 3
D4 B - 3
D5 B - 1
D6 B - 1
D7 D - 4
D8 D - 4

E-1 A - 5
E-2 A - 1
E-3 D - 5
E-4 G - 5
E-5 G - 1

IC1 C - 5

L2 C - 3

Q1 A - 5
Q2 A - 5
Q3 B - 5
Q4 A - 5
Q5 B - 4
Q6 B - 4
Q7 A - 3
Q8 A - 3
Q9 B - 3
Q10 A - 3
Q11 A - 3
Q12 B - 3
Q13 B - 2
Q14 A - 1
Q15 A - 1
Q16 B - 1
Q17 A - 1
Q18 A - 1
Q19 B - 1
Q20 C - 2
Q21 C - 3
Q22 C - 4
Q23 C - 4
Q24 C - 5
Q25 D - 5

R11 A - 5
R36 B - 2
R39 B - 2
R59 C - 1

TP1 B - 5
TP2 A - 5
TP3 B - 1
TP4 C - 5

RF EQ-1 BOARD

PB RF Equalizer

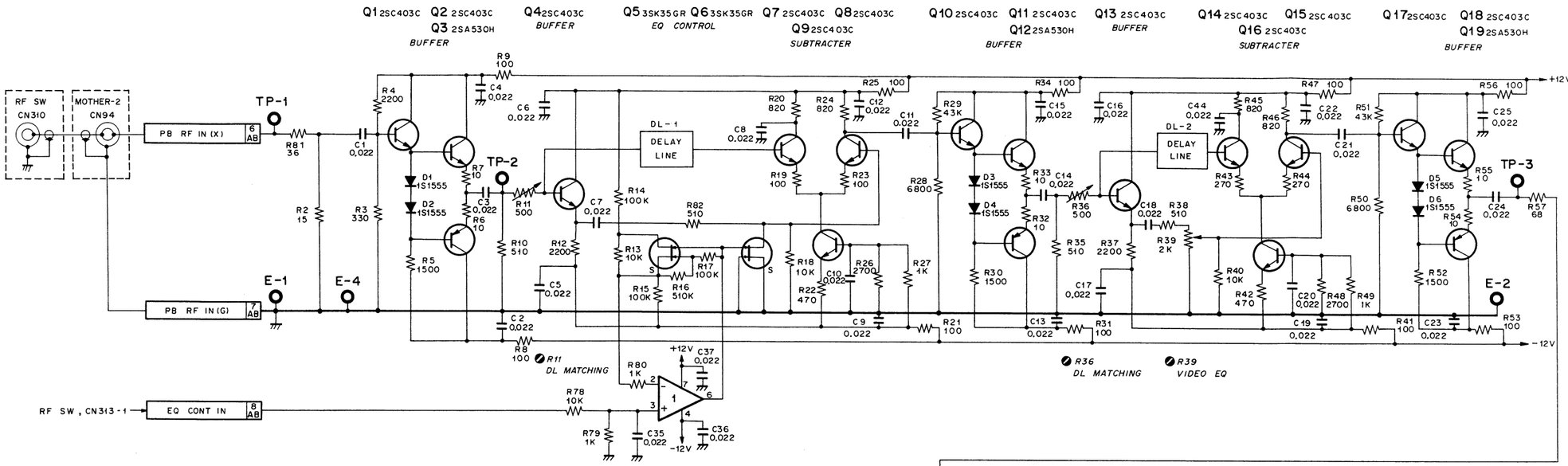

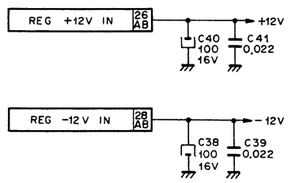

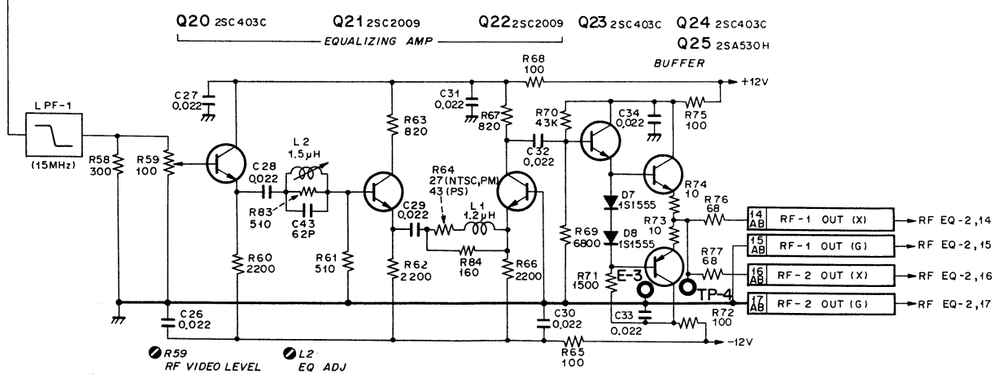

RF EQ-1 (NTSC,PS,PM)

BOARD NO. : 1-588-582-13
BVH-1100A (J) : # 20001-
BVH-1100A (U/C) : # 20001-
BVH-1100APS : # 20001-
BVH-1100APM : # 20001-

RF EQ-2 BOARD – *COMPONENT SIDE* –

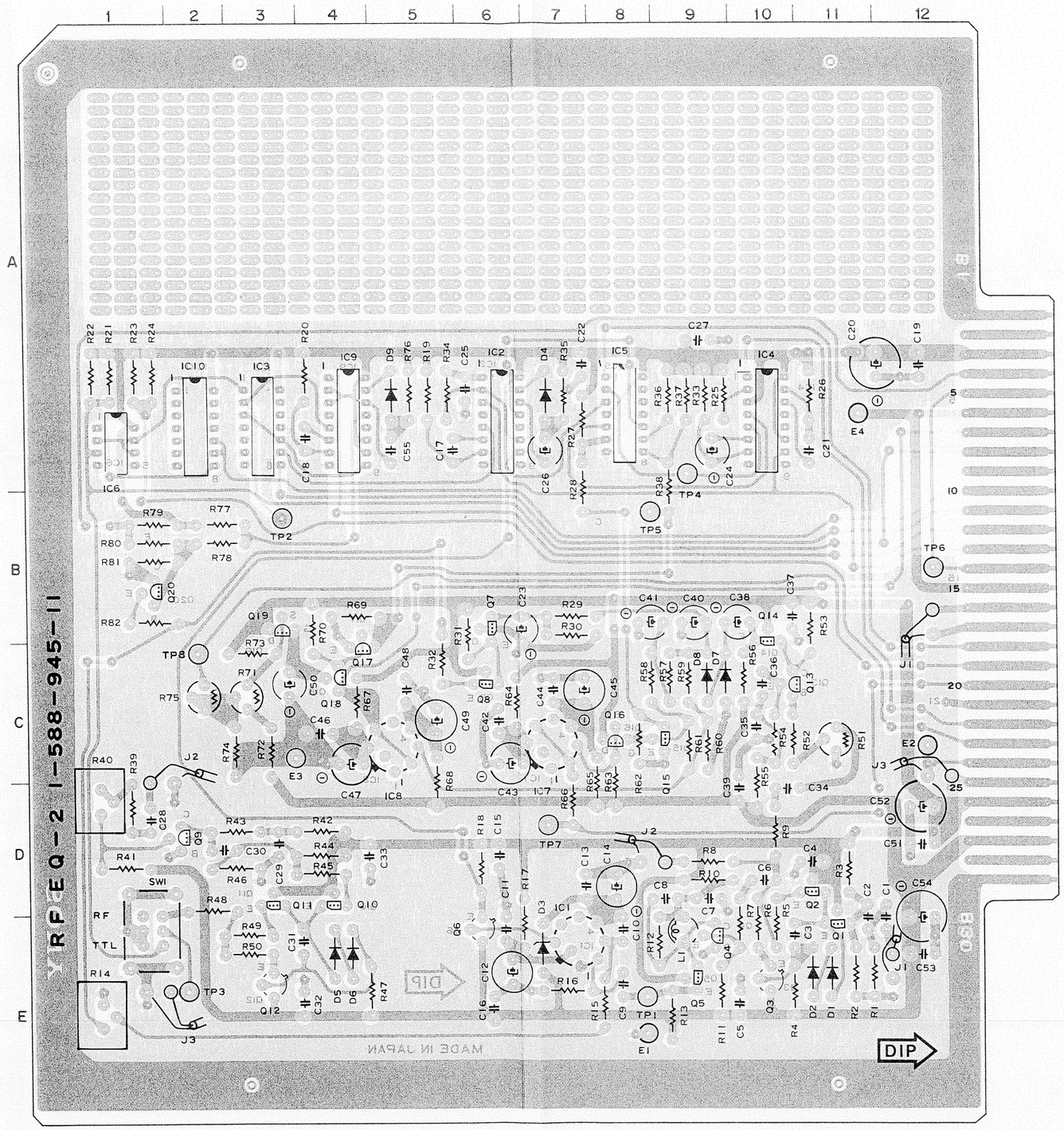

BVH-1100A (NTSC)
BVH-1100APS
BVH-1100APM
RF EQ-2 BOARD
1-588-945-11

D1	E - 11
D2	E - 11
D3	E - 7
D4	A - 7
D5	E - 4
D6	E - 4
D7	C - 9
D8	C - 9
D9	A - 5
E1	E - 8
E2	C - 12
E3	C - 3
E4	A - 11
IC1	E - 7
IC2	A - 6
IC3	A - 3
IC4	A - 10
IC5	A - 8
IC6	A - 1
IC7	C - 7
IC8	C - 5
IC9	A - 4
IC10	A - 2
Q1	E - 11
Q2	D - 11
Q3	E - 10
Q4	E - 9
Q5	E - 9
Q6	E - 6
Q7	B - 6
Q8	C - 6
Q9	D - 2
Q10	D - 4
Q11	D - 3
Q12	E - 3
Q13	C - 10
Q14	B - 10
Q15	C - 9
Q16	C - 8
Q17	C - 4
Q18	C - 4
Q19	B - 3
Q20	B - 1
R14	E - 1
R40	D - 1
R51	C - 11
R71	C - 3
R75	C - 2
SW1	E - 1
TP1	E - 8
TP2	B - 3
TP3	E - 2
TP4	A - 9
TP5	B - 8
TP6	B - 12
TP7	D - 7
TP8	C - 2

RF EQ-2 BOARD

Dropout Detector
Meter Amplifier

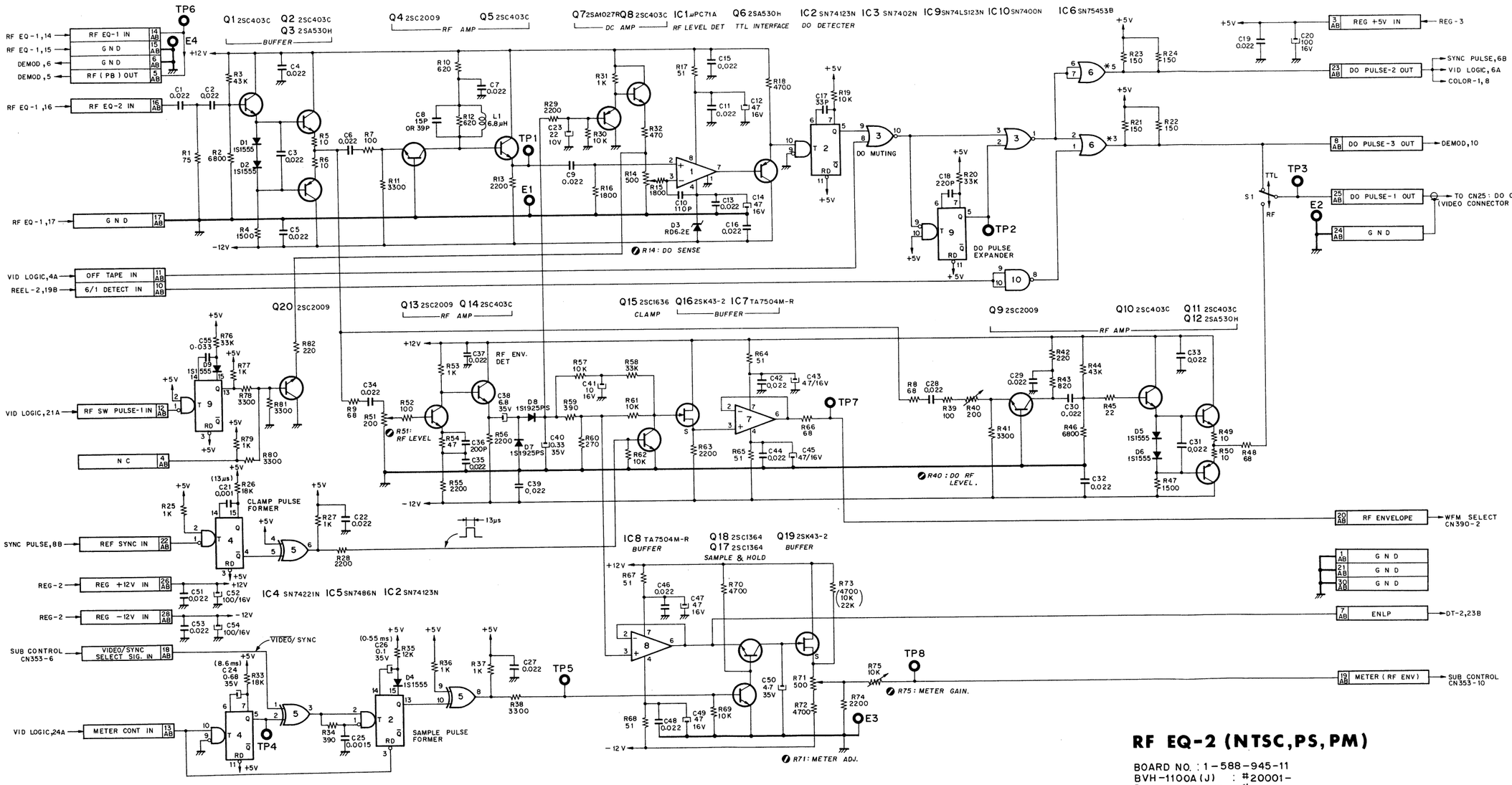

RF EQ-2 (NTSC,PS,PM)

BOARD NO. : 1-588-945-11
BVH-1100A(J) : #20001-
BVH-1100A(U/C) : #20001-
BVH-1100APS : #20001-
BVH-1100APM : #20001-

RF SW RF SW

RF SW BOARD — *COMPONENT SIDE* -

FORMER
NTSC; # 20001 – 20599
PS ; # 20001 – 20499

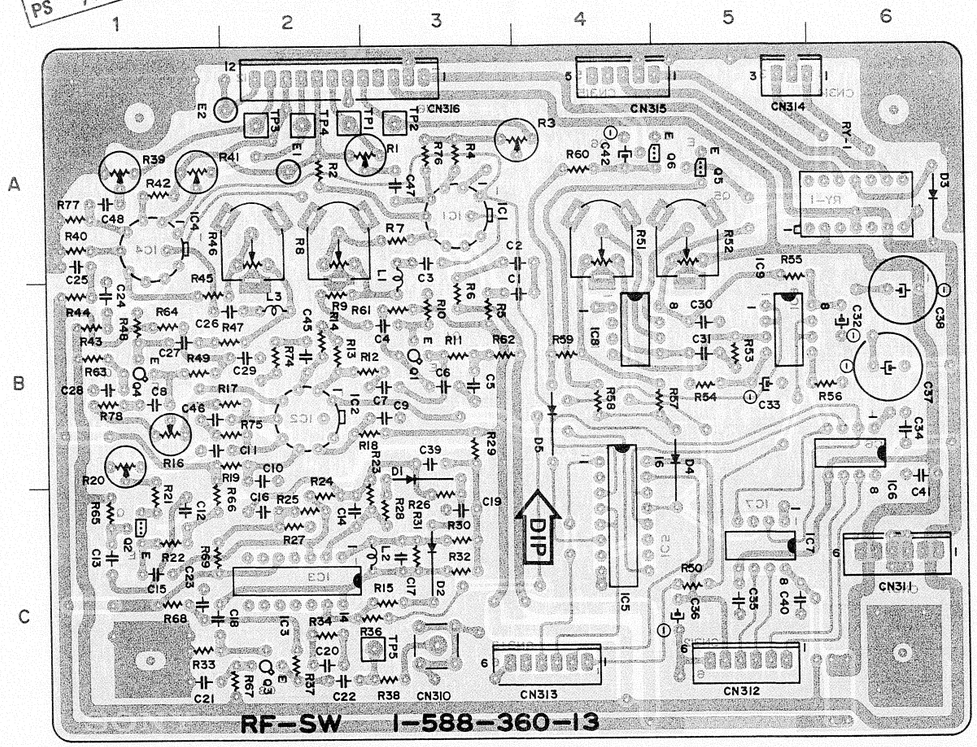

BVH-1100A (NTSC)
BVH-1100APS
BVH-1100APM
RF SW BOARD
1-588-360-13

D1	B - 3
D2	C - 3
D3	A - 6
D4	B - 5
D5	B - 4
E1	A - 2
E2	A - 2
IC1	A - 3
IC2	B - 2
IC3	C - 2
IC4	A - 1
IC5	C - 4
IC6	B - 6
IC7	C - 5
IC8	B - 4
IC9	B - 5
Q1	B - 3
Q2	C - 1
Q3	C - 2
Q4	B - 1
Q5	A - 5
Q6	A - 4
R1	A - 3
R3	A - 4
R8	A - 2
R16	B - 1
R20	B - 1
R39	A - 1
R41	A - 1
R46	A - 2
R51	A - 4
R52	A - 5
TP1	A - 2
TP2	A - 3
TP3	A - 2
TP4	A - 2
TP5	C - 3

RF SW BOARD — *COMPONENT SIDE* —

NEW
NTSC; # 20601 –
PS ; # 20501 –

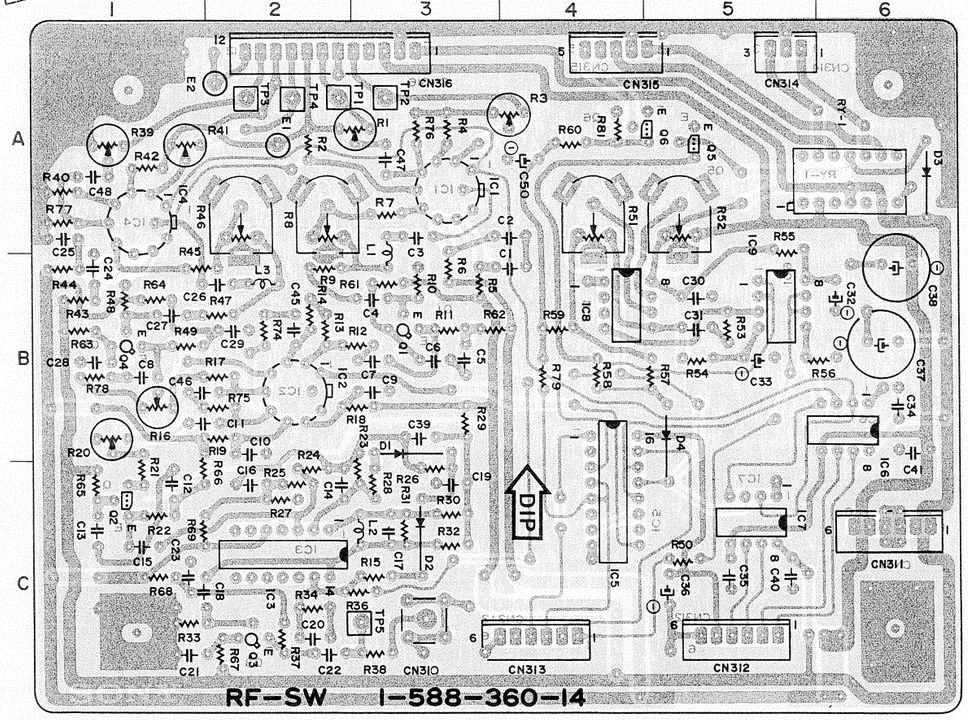

BVH-1100A (NTSC)
BVH-1100APS
BVH-1100APM
RF SW BOARD
1-588-360-14

D1	B - 3
D2	C - 3
D3	A - 6
D4	B - 5
D5	B - 4
E1	A - 2
E2	A - 2
IC1	A - 3
IC2	B - 2
IC3	C - 2
IC4	A - 1
IC5	C - 4
IC6	B - 6
IC7	C - 5
IC8	B - 4
IC9	B - 5
Q1	B - 3
Q2	C - 1
Q3	C - 2
Q4	B - 1
Q5	A - 5
Q6	A - 5
R1	A - 3
R3	A - 4
R8	A - 2
R16	B - 1
R20	B - 1
R39	A - 1
R41	A - 1
R46	A - 2
R51	A - 4
R52	A - 5
TP1	A - 2
TP2	A - 3
TP3	A - 2
TP4	A - 2
TP5	C - 3

RF SW BOARD

RF Switcher
DG/DP Compensator

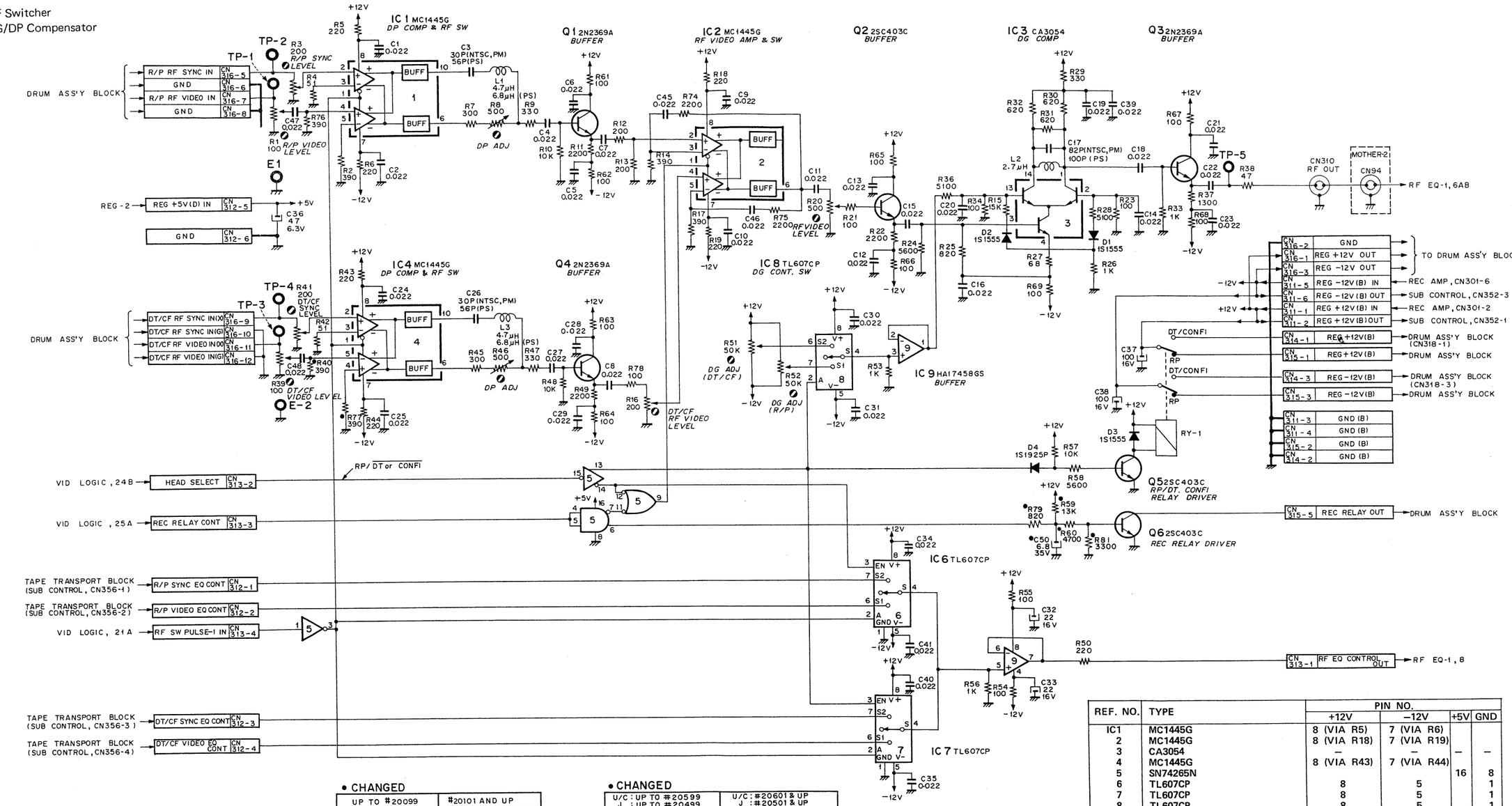

REF. NO.	TYPE	PIN NO.			
		+12V	−12V	+5V	GND
IC1	MC1445G	8 (VIA R5)	7 (VIA R6)		
2	MC1445G	8 (VIA R18)	7 (VIA R19)		
3	CA3054	–	–	–	–
4	MC1445G	8 (VIA R43)	7 (VIA R44)		
5	SN74265N			16	8
6	TL607CP	8	5		1
7	TL607CP	8	5		1
8	TL607CP	8	5		1
9	HA17458GS, LM1458N	8 (VIA R55)	4 (VIA R54)		

• CHANGED

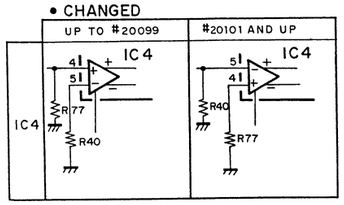

• CHANGED

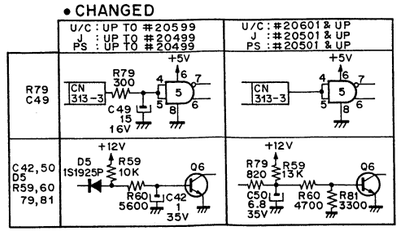

RF SW (NTSC,PS,PM)

BOARD NO:1-588-360-13,14
BVH-1100A(J) : #20001-
BVH-1100A(U/C) : #20001-
BVH-1100APS : #20001-
BVH-1100APM : #20001-

SYNC PULSE SYNC PULSE

SYNC PULSE BOARD — *COMPONENT SIDE* —

FORMER
NTSC; # 20001 – 20499
PS ; # 20001 – 20399

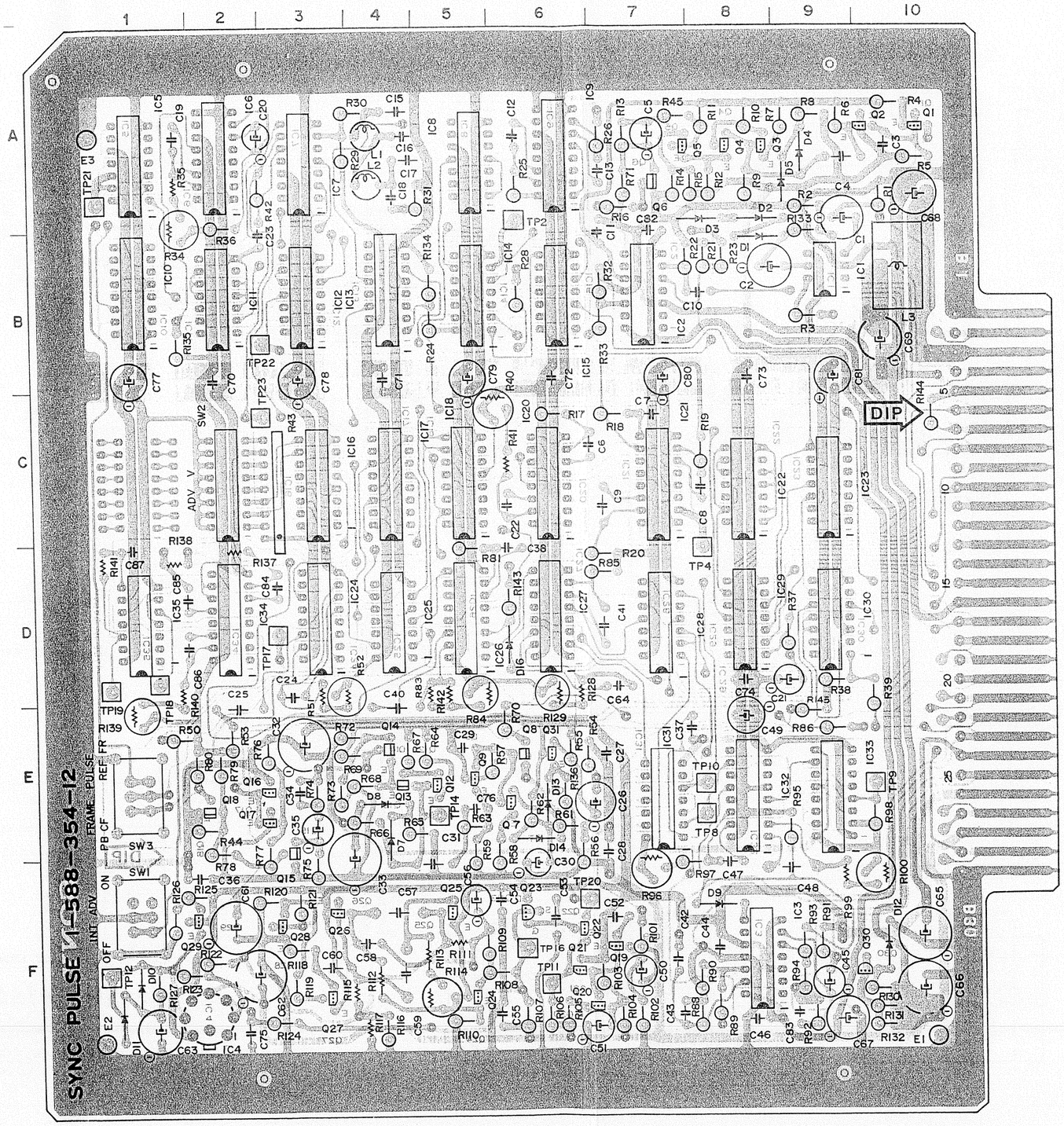

BVH-1100A (NTSC)
BVH-1100APS
BVH-1100APM
SYNC PULSE BOARD
1-588-354-12

D1	B - 8	SW1	F - 1
D2	A - 8	SW2	C - 2
D3	A - 8	SW3	E - 1
D4	A - 9		
D5	A - 9	TP2	A - 6
D7	E - 4	TP4	D - 8
D8	E - 4	TP8	E - 8
D9	F - 8	TP9	E - 10
D10	F - 1	TP10	E - 8
D11	F - 1	TP11	F - 6
D12	F - 10	TP12	F - 1
D13	E - 6	TP14	E - 5
D14	E - 6	TP16	F - 6
D16	D - 6	TP17	D - 3
		TP18	D - 1
E1	F - 10	TP19	D - 1
E2	F - 1	TP20	F - 6
E3	A - 1	TP21	A - 1
		TP22	B - 2
IC1	B - 9	TP23	C - 2
IC2	B - 7		
IC3	F - 8		
IC4	F - 2		
IC5	A - 1		
IC6	A - 2		
IC7	A - 3		
IC8	A - 5		
IC9	A - 6		
IC10	B - 1		
IC11	B - 2		
IC12	B - 3		
IC13	B - 4		
IC14	B - 5		
IC15	B - 6		
IC16	C - 3		
IC17	C - 4		
IC18	C - 5		
IC20	C - 6		
IC21	C - 7		
IC22	C - 8		
IC23	C - 9		
IC24	D - 3		
IC25	D - 4		
IC26	D - 5		
IC27	D - 6		
IC28	D - 7		
IC29	D - 8		
IC30	D - 9		
IC31	E - 7		
IC32	E - 8		
IC33	E - 9		
IC34	D - 2		
IC35	D - 1		
Q1	A - 10		
Q2	A - 10		
Q3	A - 8		
Q4	A - 8		
Q5	A - 7		
Q6	A - 7		
Q7	E - 6		
Q8	E - 6		
Q9	E - 5		
Q12	E - 5		
Q13	E - 4		
Q14	E - 4		
Q15	E - 3		
Q16	E - 2		
Q17	E - 2		
Q18	E - 2		
Q19	F - 7		
Q20	F - 6		
Q21	F - 6		
Q22	F - 6		
Q23	F - 6		
Q24	F - 5		
Q25	F - 5		
Q26	F - 3		
Q27	F - 3		
Q28	F - 3		
Q29	F - 1		
Q30	F - 9		
Q31	E - 6		
R34	B - 1		
R40	C - 5		
R43	C - 3		
R52	D - 3		
R84	D - 5		
R96	F - 7		
R100	F - 10		
R114	F - 5		
R129	D - 6		
R139	E - 1		

FORMER
NTSC; # 20001 – 20499
PS ; # 20001 – 20399

SYNC PULSE BOARD

Reference FRAME/H/V Generator
PB Sync Generator

FORMER
NTSC; # 20001 – 20499
PS ; # 20001 – 20399

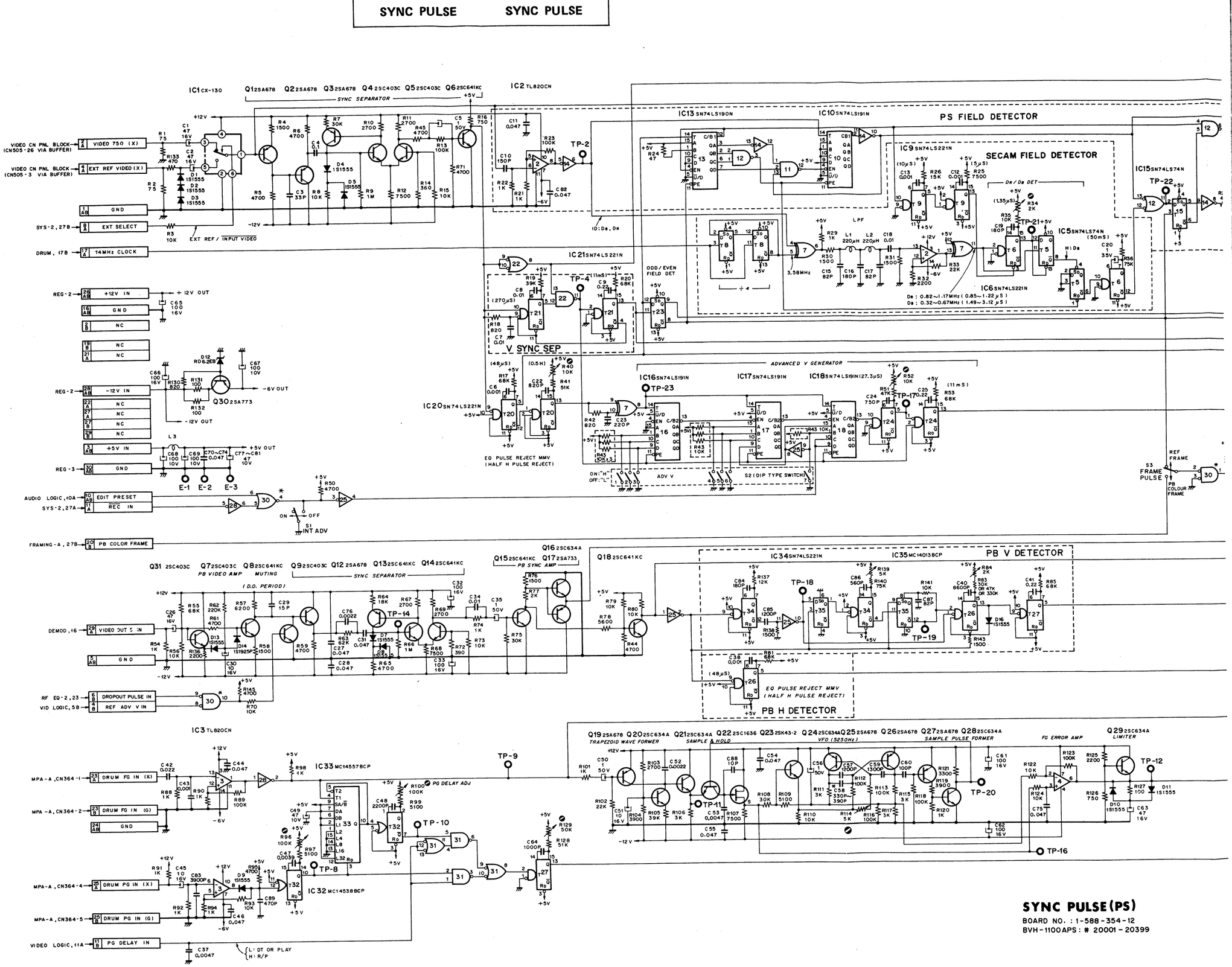

SYNC PULSE (PS)

BOARD NO. : 1-588-354-12
BVH-1100APS : # 20001 – 20399

SYNC PULSE

FORMER
NTSC; # 20001 – 20499
PS ; # 20001 – 20399

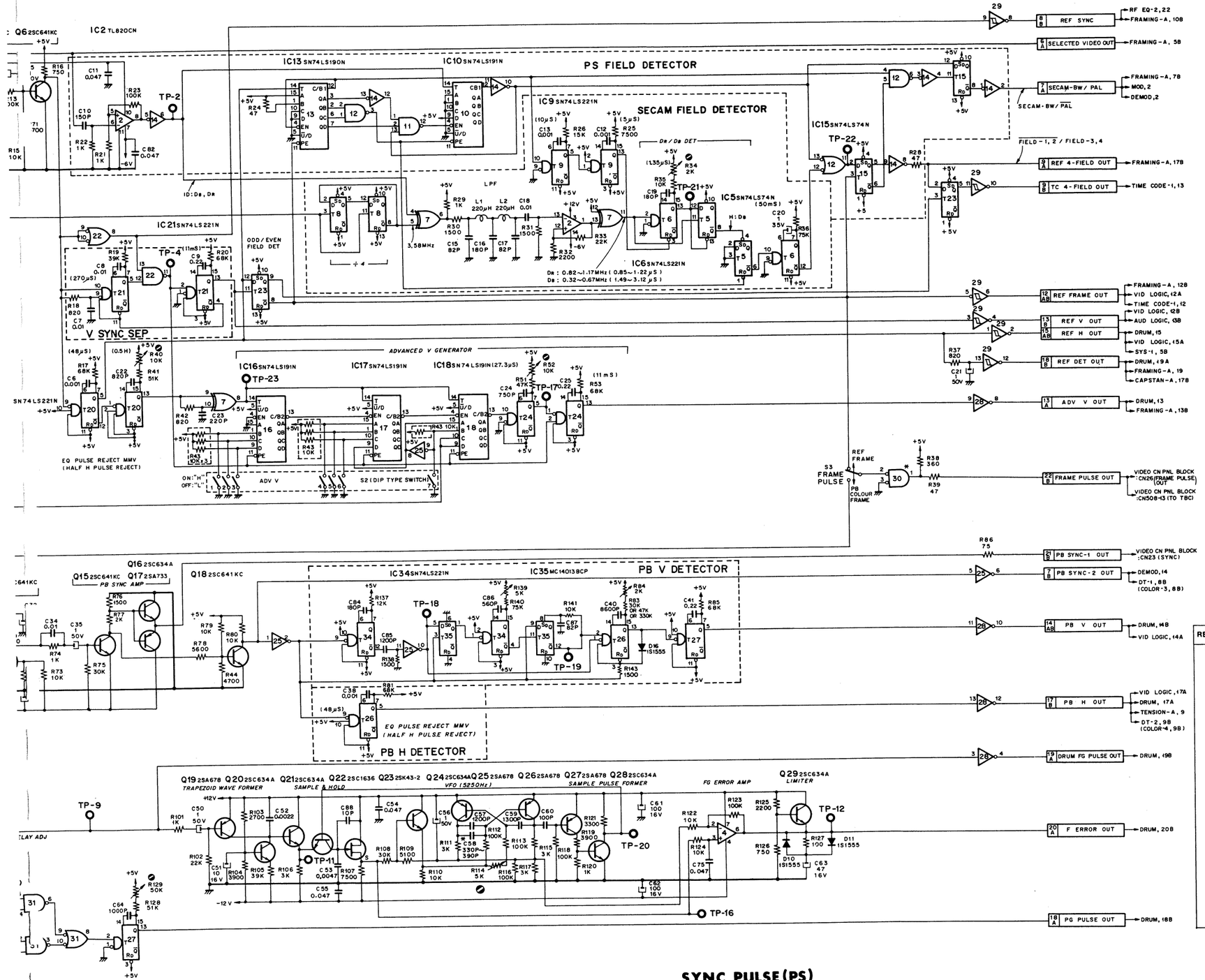

REF. NO.	TYPE	PIN NO.			
		+12V	−12V	+5V	GND
IC1	CX-130	4			2
2	TL820CN (PS/PM ONLY)	10	7 (−6V)		
3	TL820CN	3	14 (−6V)		
4	TA7504M, μA741HC	7	4		
5	SN74LS74N (PS ONLY)			14	7
6	SN74LS221N (PS ONLY)			16	8
7	SN74LS86N			14	7
8	SN74LS74N (PS ONLY)			14	7
9	SN74LS221N (PS ONLY)			16	8
10	SN74LS191N (PS/PM ONLY)			16	8
11	SN74LS10N (PS/PM ONLY)			14	7
12	SN74LS00N (PS/PM ONLY)			14	7
13	SN74LS190N (PS/PM ONLY)			16	8
14	SN74LS04N (PS/PM ONLY)			14	7
15	SN74LS74N (PS/PM ONLY)			14	7
16	SN74LS191N			16	8
17	SN74LS191N			16	8
18	SN74LS191N			16	8
20	SN74LS221N			16	8
21	SN74LS221N			16	8
22	SN74LS00N			14	7
23	SN74LS74N			14	7
24	SN74LS221N			16	8
25	SN74LS04N			14	7
26	SN74LS221N			16	8
27	SN74LS221N			16	8
28	SN74LS04N			14	7
29	SN74LS14N			14	7
30	SN74LS33N			14	7
31	SN74LS00N			14	7
32	MC14538BCP			16	8
33	MC14557BCP			16	8
34	SN74LS221N			16	8
35	CD4013BE, TC4013BP			14	7

SYNC PULSE (PS)

BOARD NO. : 1-588-354-12
BVH-1100APS : # 20001 – 20399

SYNC PULSE · SYNC PULSE

NEW
NTSC; # 20501 –
PS ; # 20401 –

SYNC PULSE BOARD – *COMPONENT SIDE* –

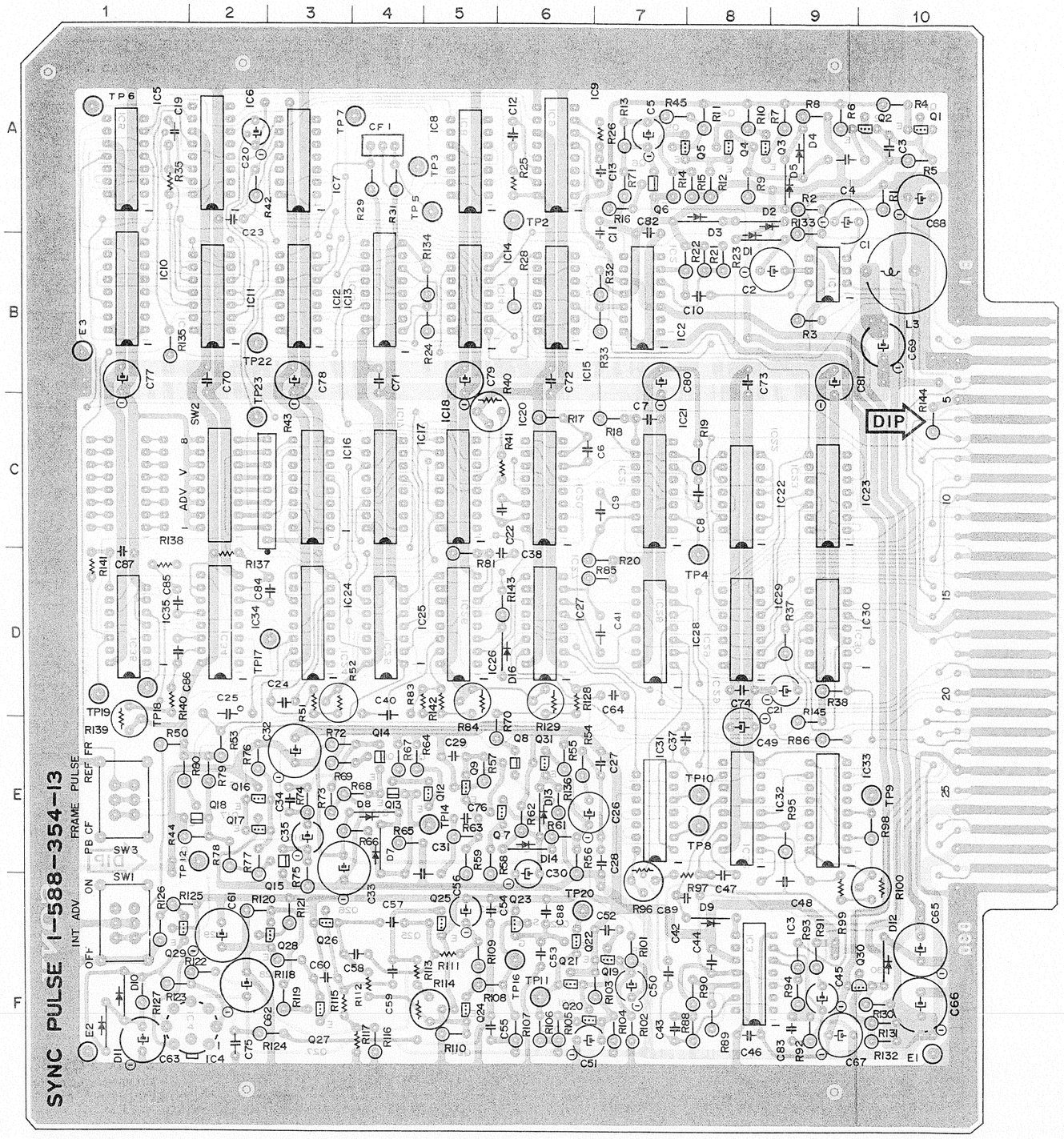

21-147 (3/7)

BVH-1100A (NTSC)
SYNC PULSE BOARD
1-588-354-13

D1	B - 8
D2	A - 8
D3	A - 8
D4	A - 9
D5	A - 9
D7	E - 4
D8	E - 4
D9	F - 8
D10	F - 1
D11	F - 1
D12	F - 10
D13	E - 6
D14	E - 6
D16	D - 6
E1	F - 10
E2	F - 1
E3	B - 1
IC1	B - 9
IC3	F - 8
IC4	F - 2
IC7	A - 3
IC16	C - 3
IC17	C - 4
IC18	C - 5
IC20	C - 6
IC21	C - 7
IC22	C - 8
IC23	C - 9
IC24	D - 3
IC25	D - 4
IC26	D - 5
IC27	D - 6
IC28	D - 7
IC29	D - 8
IC30	D - 9
IC31	E - 7
IC32	E - 8
IC33	E - 9
IC34	D - 2
IC35	D - 1
Q1	A - 10
Q2	A - 10
Q3	A - 8
Q4	A - 8
Q5	A - 8
Q6	A - 7
Q7	E - 6
Q8	E - 6
Q9	E - 5
Q12	E - 5
Q13	E - 4
Q14	E - 4
Q15	F - 3
Q16	E - 2
Q17	E - 2
Q18	E - 2
Q19	F - 7
Q20	F - 6
Q21	F - 6
Q22	F - 6
Q23	F - 6
Q24	F - 5
Q25	F - 5
Q26	F - 3
Q27	F - 3
Q28	F - 3
Q29	F - 1
Q30	F - 9
Q31	E - 6
R40	B - 6
R43	C - 3
R52	D - 3
R84	D - 5
R96	F - 7
R114	F - 5
R129	D - 6
R139	E - 1
SW1	F - 1
SW2	C - 2
SW3	E - 1
TP1	A - 6
TP3	A - 5
TP4	D - 8
TP8	E - 8
TP9	E - 10
TP10	E - 8
TP11	F - 6
TP12	E - 2
TP14	E - 5
TP16	F - 6
TP17	D - 2
TP18	D - 1
TP19	D - 1
TP20	F - 6
TP22	B - 2
TP23	C - 2

BVH-1100APS
SYNC PULSE BOARD
1-588-354-13

D1	B - 8
D2	A - 8
D3	A - 8
D4	A - 9
D5	A - 9
D7	E - 4
D8	E - 4
D9	F - 9
D10	F - 1
D11	F - 1
D12	F - 10
D13	E - 6
D14	E - 6
D16	D - 6
E1	F - 10
E2	F - 1
E3	B - 1
IC1	B - 9
IC2	B - 7
IC3	F - 8
IC4	F - 2
IC5	A - 1
IC6	A - 2
IC7	A - 3
IC8	A - 5
IC9	A - 6
IC10	B - 1
IC11	B - 2
IC12	B - 3
IC13	B - 4
IC14	B - 5
IC15	B - 6
IC16	C - 3
IC17	C - 4
IC18	C - 5
IC20	C - 6
IC21	C - 7
IC22	C - 8
IC23	C - 9
IC24	D - 3
IC25	D - 4
IC26	D - 5
IC27	D - 6
IC28	D - 7
IC29	D - 8
IC30	D - 9
IC31	E - 7
IC32	E - 8
IC33	E - 9
IC34	D - 2
IC35	D - 1
Q1	A - 10
Q2	A - 10
Q3	A - 8
Q4	A - 8
Q5	A - 8
Q6	A - 7
Q7	E - 6
Q8	E - 6
Q9	E - 5
Q12	E - 5
Q13	E - 4
Q14	E - 4
Q15	F - 3
Q16	E - 2
Q17	E - 2
Q18	E - 2
Q19	F - 7
Q20	F - 6
Q21	F - 6
Q22	F - 6
Q23	F - 6
Q24	F - 5
Q25	F - 5
Q26	F - 3
Q27	F - 3
Q28	F - 3
Q29	F - 1
Q30	F - 9
Q31	E - 6
R40	B - 6
R43	C - 3
R52	D - 3
R84	D - 5
R96	F - 7
R114	F - 5
R129	D - 6
R139	E - 1
SW1	F - 1
SW2	C - 2
SW3	E - 1
TP1	A - 6
TP2	A - 6
TP3	A - 5
TP4	A - 5
TP5	A - 5
TP6	A - 1
TP7	A - 4
TP8	E - 8
TP9	E - 10
TP10	E - 8
TP11	F - 6
TP12	E - 2
TP14	E - 5
TP16	F - 6
TP17	D - 2
TP18	D - 1
TP19	D - 1
TP20	F - 6
TP22	B - 2
TP23	C - 2

BVH-1100APM
SYNC PULSE BOARD
1-588-354-13

D1	B - 8
D2	A - 8
D3	A - 8
D4	A - 9
D5	A - 9
D7	E - 4
D8	E - 4
D9	F - 8
D10	F - 1
D11	F - 1
D12	F - 10
D13	E - 6
D14	E - 6
D16	D - 6
E1	F - 10
E2	F - 1
E3	B - 1
IC1	B - 9
IC2	B - 7
IC3	F - 8
IC4	F - 2
IC7	A - 3
IC10	B - 1
IC11	B - 2
IC12	B - 3
IC13	B - 4
IC14	B - 5
IC15	B - 6
IC16	C - 3
IC17	C - 4
IC18	C - 5
IC20	C - 6
IC21	C - 7
IC22	C - 8
IC23	C - 9
IC24	D - 3
IC25	D - 4
IC26	D - 5
IC27	D - 6
IC28	D - 7
IC29	D - 8
IC30	D - 9
IC31	E - 7
IC32	E - 8
IC33	E - 9
IC34	D - 2
IC35	D - 1
Q1	A - 10
Q2	A - 10
Q3	A - 8
Q4	A - 8
Q5	A - 8
Q6	A - 7
Q7	E - 6
Q8	E - 6
Q9	E - 5
Q12	E - 5
Q13	E - 4
Q14	E - 4
Q15	F - 3
Q16	E - 2
Q17	E - 2
Q18	E - 2
Q19	F - 7
Q20	F - 6
Q21	F - 6
Q22	F - 6
Q23	F - 6
Q24	F - 5
Q25	F - 5
Q26	F - 3
Q27	F - 3
Q28	F - 3
Q29	F - 1
Q30	F - 9
Q31	E - 6
R40	B - 6
R43	C - 3
R52	D - 3
R84	D - 5
R96	F - 7
R114	F - 5
R129	D - 6
R139	E - 1
SW1	F - 1
SW2	C - 2
SW3	E - 1
TP2	A - 6
TP3	A - 5
TP4	D - 8
TP8	E - 8
TP9	E - 10
TP10	E - 8
TP11	F - 6
TP12	E - 2
TP14	E - 5
TP16	F - 6
TP17	D - 2
TP18	D - 1
TP19	D - 1
TP20	F - 6
TP22	B - 2
TP23	C - 2

NEW
NTSC; # 20501 –
PS ; # 20401 –

21-147 (4/7)

SYNC PULSE BOARD

Reference FRAME/H/V Generator
PB Sync Generator

NEW
NTSC; # 20501 –
PS ; # 20401 –

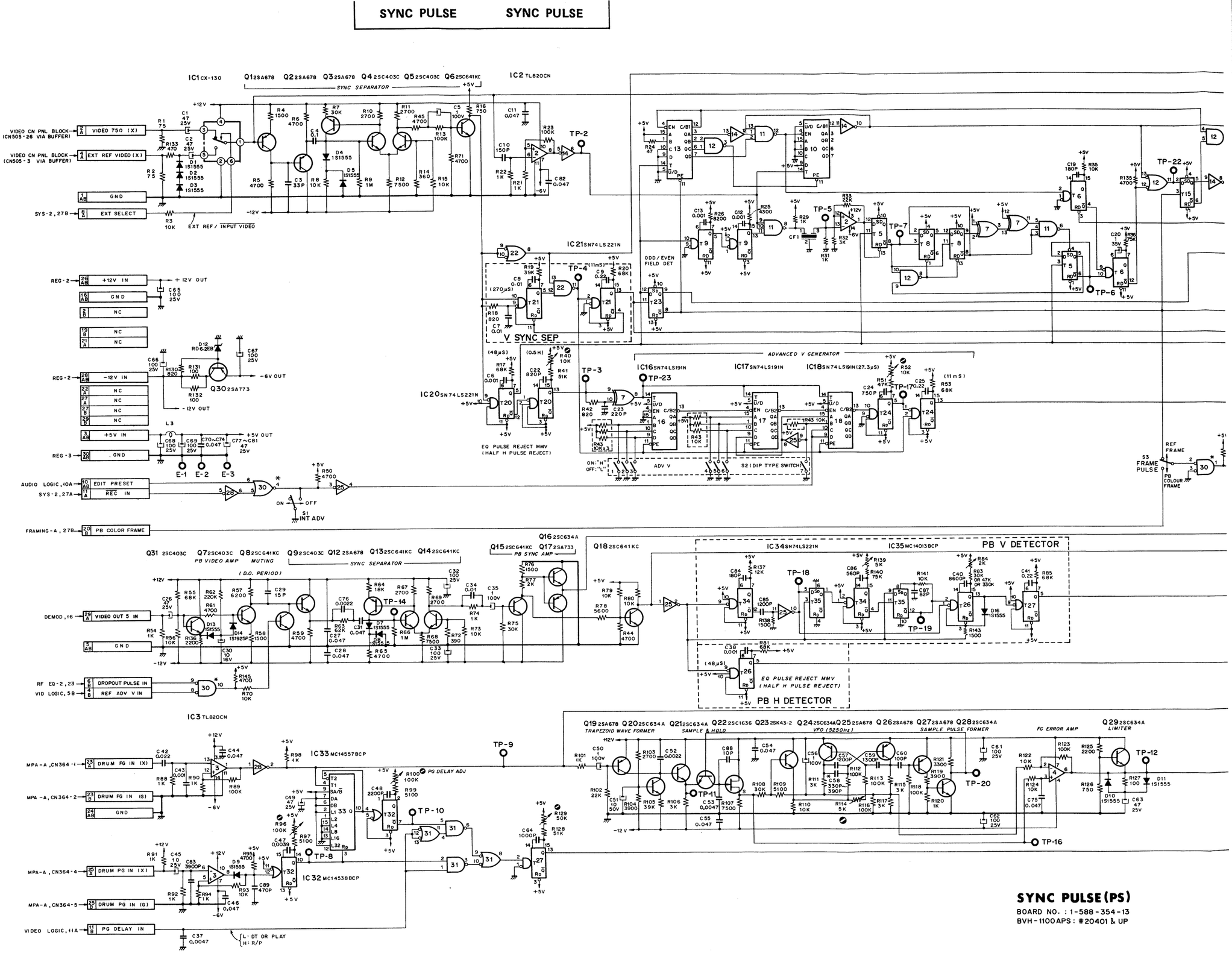

SYNC PULSE (PS)

BOARD NO. : 1-588-354-13
BVH-1100APS : #20401 & UP

21-147 (5/7)

21-147 (6/6)

SYNC PULSE

NEW
NTSC; #20501 –
PS ; #20401 –

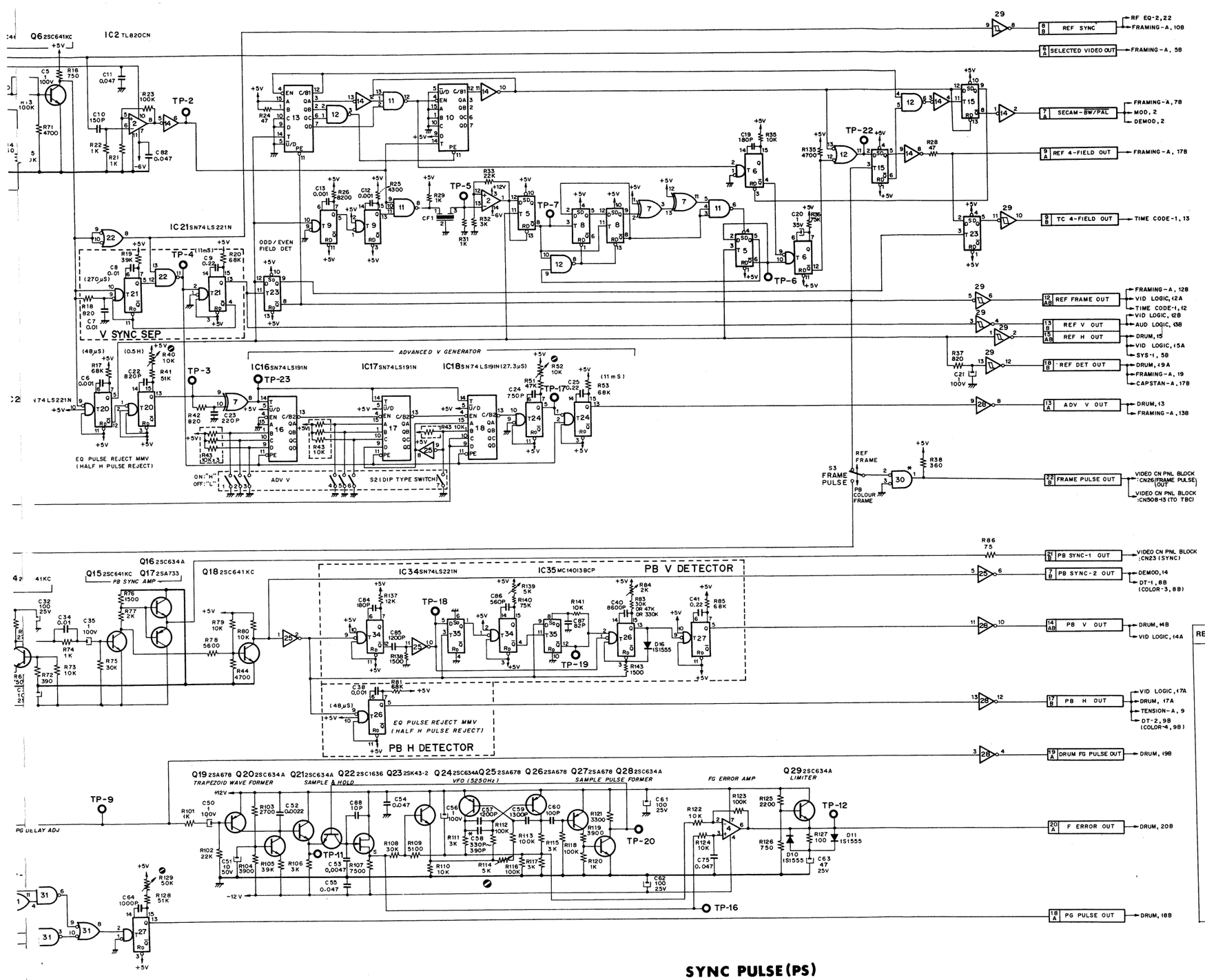

REF. NO.	TYPE	PIN NO. +12V	−12V	+5V	GND
IC1	CX-130	4			2
2	TL820CN (PS/PM ONLY)	10	7 (−6V)		
3	TL820CN	3	14 (−6V)		
4	TA7504M, μA741HC	7	4		
5	SN74LS74N (PS ONLY)			14	7
6	SN74LS221N (PS ONLY)			16	8
7	SN74LS86N			14	7
8	SN74LS74N (PS ONLY)			14	7
9	SN74LS221N (PS ONLY)			16	8
10	SN74LS191N (PS/PM ONLY)			16	8
11	SN74LS10N (PS/PM ONLY)			14	7
12	SN74LS00N (PS/PM ONLY)			14	7
13	SN74LS190N (PS/PM ONLY)			16	8
14	SN74LS04N (PS/PM ONLY)			14	7
15	SN74LS74N (PS/PM ONLY)			14	7
16	SN74LS191N			16	8
17	SN74LS191N			16	8
18	SN74LS191N			16	8
20	SN74LS221N			16	8
21	SN74LS221N			16	8
22	SN74LS00N			14	7
23	SN74LS74N			14	7
24	SN74LS221N			16	8
25	SN74LS04N			14	7
26	SN74LS221N			16	8
27	SN74LS221N			16	8
28	SN74LS04N			14	7
29	SN74LS14N			14	7
30	SN74LS33N			14	7
31	SN74LS00N			14	7
32	MC14538BCP			16	8
33	MC14557BCP			16	8
34	SN74LS221N			16	8
35	CD4013BE, TC4013BP			14	7

SYNC PULSE (PS)

BOARD NO. : 1-588-354-13
BVH-1100APS : #20401 & UP

FORMER
20001 – 20599

SYS-1 BOARD – *COMPONENT SIDE* –

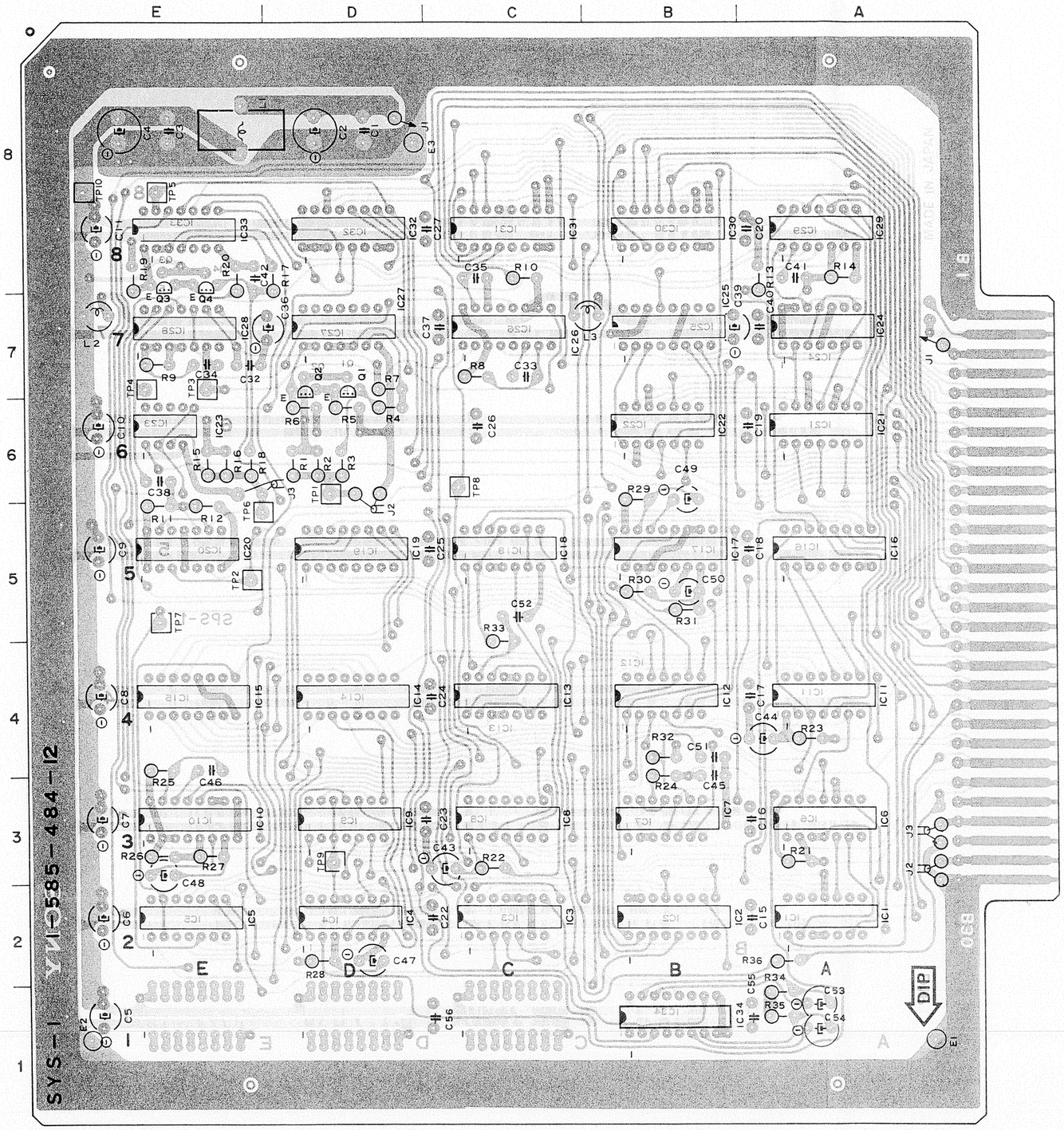

BVH-1100A (NTSC)
BVH-1100APS
SYS-1 BOARD
1-585-484-12

E1 A - 1
E2 E - 1
E3 D - 8

IC1 A - 2
IC2 B - 2
IC3 C - 2
IC4 D - 2
IC5 E - 2
IC6 A - 3
IC7 B - 3
IC8 C - 3
IC9 D - 3
IC10 E - 3
IC11 A - 4
IC12 B - 4
IC13 C - 4
IC14 D - 4
IC15 E - 4
IC16 A - 5
IC17 B - 5
IC18 C - 5
IC19 D - 5
IC20 E - 5
IC21 A - 6
IC22 B - 6
IC23 E - 6
IC24 A - 7
IC25 B - 7
IC26 C - 7
IC27 D - 7
IC28 E - 7
IC29 A - 8
IC30 B - 8
IC31 C - 8
IC32 D - 8
IC33 E - 8
IC34 B - 1

Q1 D - 7
Q2 D - 7
Q3 E - 7
Q4 E - 7

TP1 D - 6
TP2 E - 5
TP3 E - 7
TP4 E - 7
TP5 E - 8
TP6 E - 5
TP7 E - 5
TP8 C - 6
TP9 D - 3
TP10 E - 8

SYS-1

NEW
20601 –

SYS-1 BOARD – *COMPONENT SIDE* –

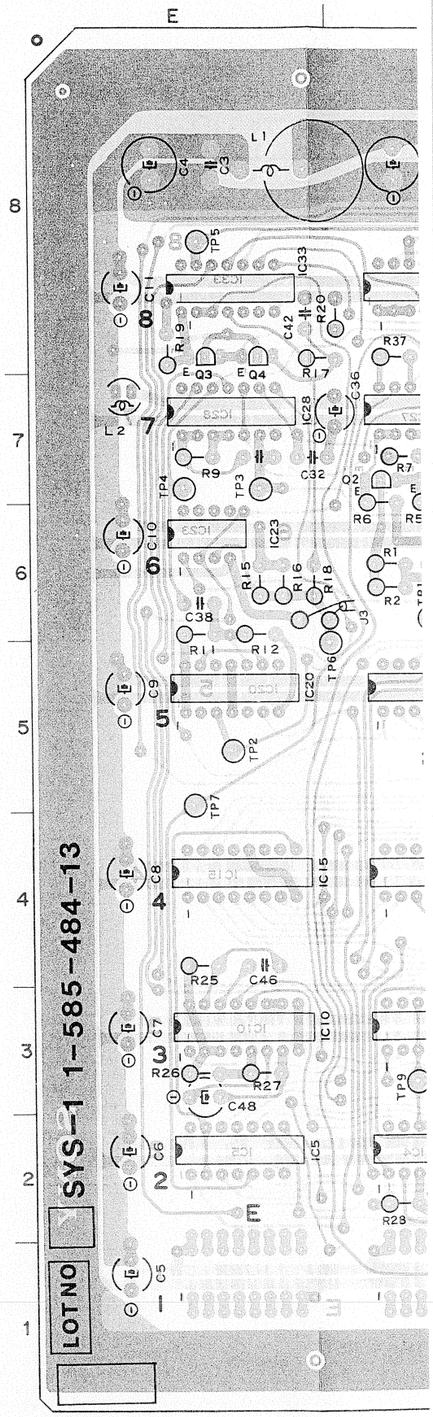

FORMER
20001 – 20599

SYS-1 BOARD — *COMPONENT SIDE* —

BVH-1100A (NTSC)
BVH-1100APS
SYS-1 BOARD
1-585-484-12

NEW
#20601 –

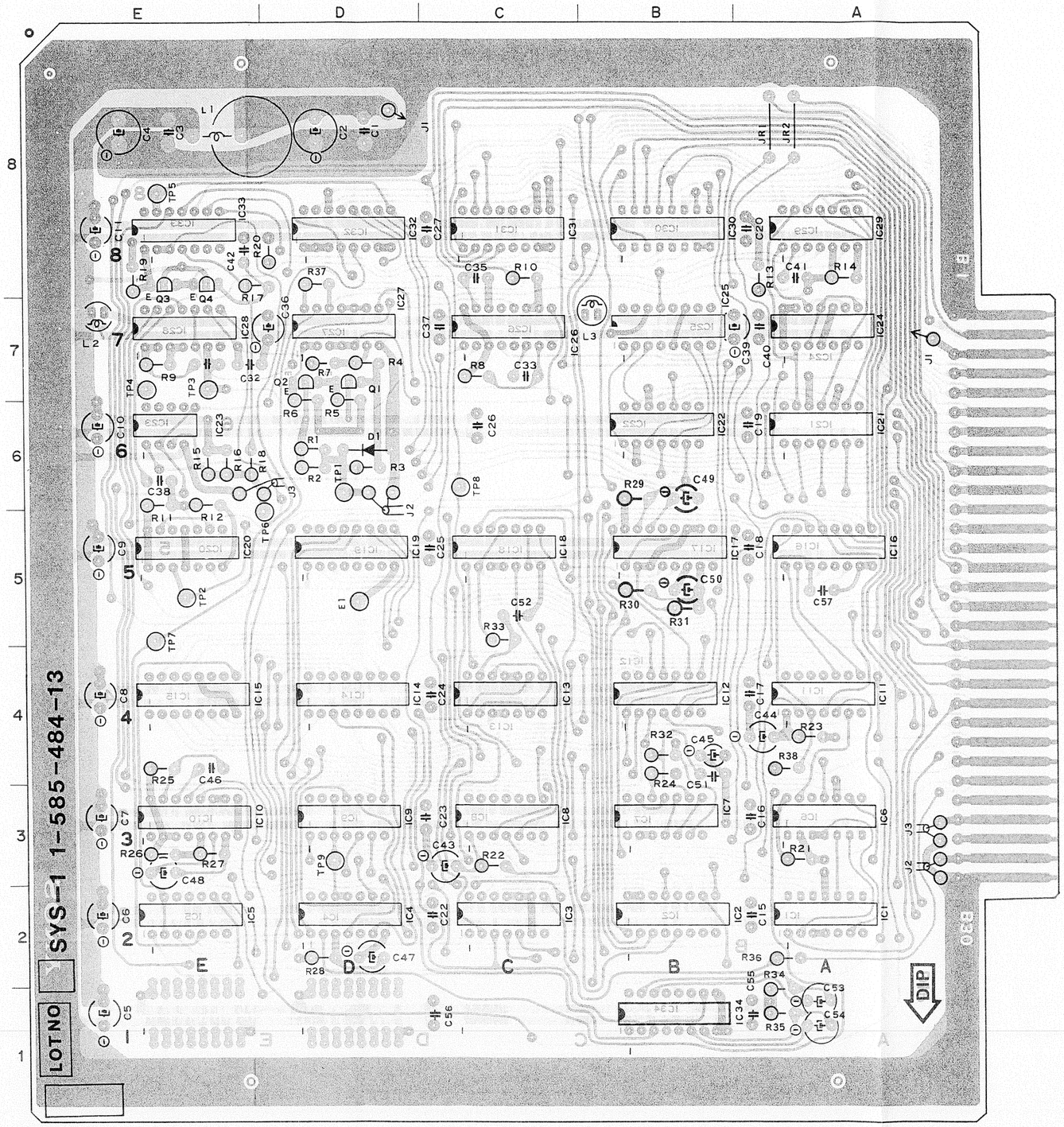

FORMER
#20001 – 20599

E1	A - 1
E2	E - 1
E3	D - 8
IC1	A - 2
IC2	B - 2
IC3	C - 2
IC4	D - 2
IC5	E - 2
IC6	A - 3
IC7	B - 3
IC8	C - 3
IC9	D - 3
IC10	E - 3
IC11	A - 4
IC12	B - 4
IC13	C - 4
IC14	D - 4
IC15	E - 4
IC16	A - 5
IC17	B - 5
IC18	C - 5
IC19	D - 5
IC20	E - 5
IC21	A - 6
IC22	B - 6
IC23	E - 6
IC24	A - 7
IC25	B - 7
IC26	C - 7
IC27	D - 7
IC28	E - 7
IC29	A - 8
IC30	B - 8
IC31	C - 8
IC32	D - 8
IC33	E - 8
IC34	B - 1
Q1	D - 7
Q2	D - 7
Q3	E - 7
Q4	E - 7
TP1	D - 6
TP2	E - 5
TP3	E - 7
TP4	E - 7
TP5	E - 8
TP6	E - 5
TP7	E - 5
TP8	C - 6
TP9	D - 3
TP10	E - 8

BVH-1100A (NTSC)
BVH-1100APS
BVH-1100APM
SYS-1 BOARD
1-585-484-13

D1	D - 6
E1	D - 5
IC1	A - 2
IC2	B - 2
IC3	C - 2
IC4	D - 2
IC5	E - 2
IC6	A - 3
IC7	B - 3
IC8	C - 3
IC9	D - 3
IC10	E - 3
IC11	A - 4
IC12	B - 4
IC13	C - 4
IC14	D - 4
IC15	E - 4
IC16	A - 5
IC17	B - 5
IC18	C - 5
IC19	D - 5
IC20	E - 5
IC21	A - 6
IC22	B - 6
IC23	E - 6
IC24	A - 7
IC25	B - 7
IC26	C - 7
IC27	D - 7
IC28	E - 7
IC29	A - 8
IC30	B - 8
IC31	C - 8
IC32	D - 8
IC33	E - 8
IC34	B - 1
Q1	D - 7
Q2	D - 7
Q3	E - 8
Q4	E - 8
TP1	D - 6
TP2	E - 5
TP3	E - 7
TP4	E - 7
TP5	E - 8
TP6	D - 5
TP7	E - 5
TP8	C - 6
TP9	D - 3

NEW
#20601 –

SYS-1 BOARD

System Control

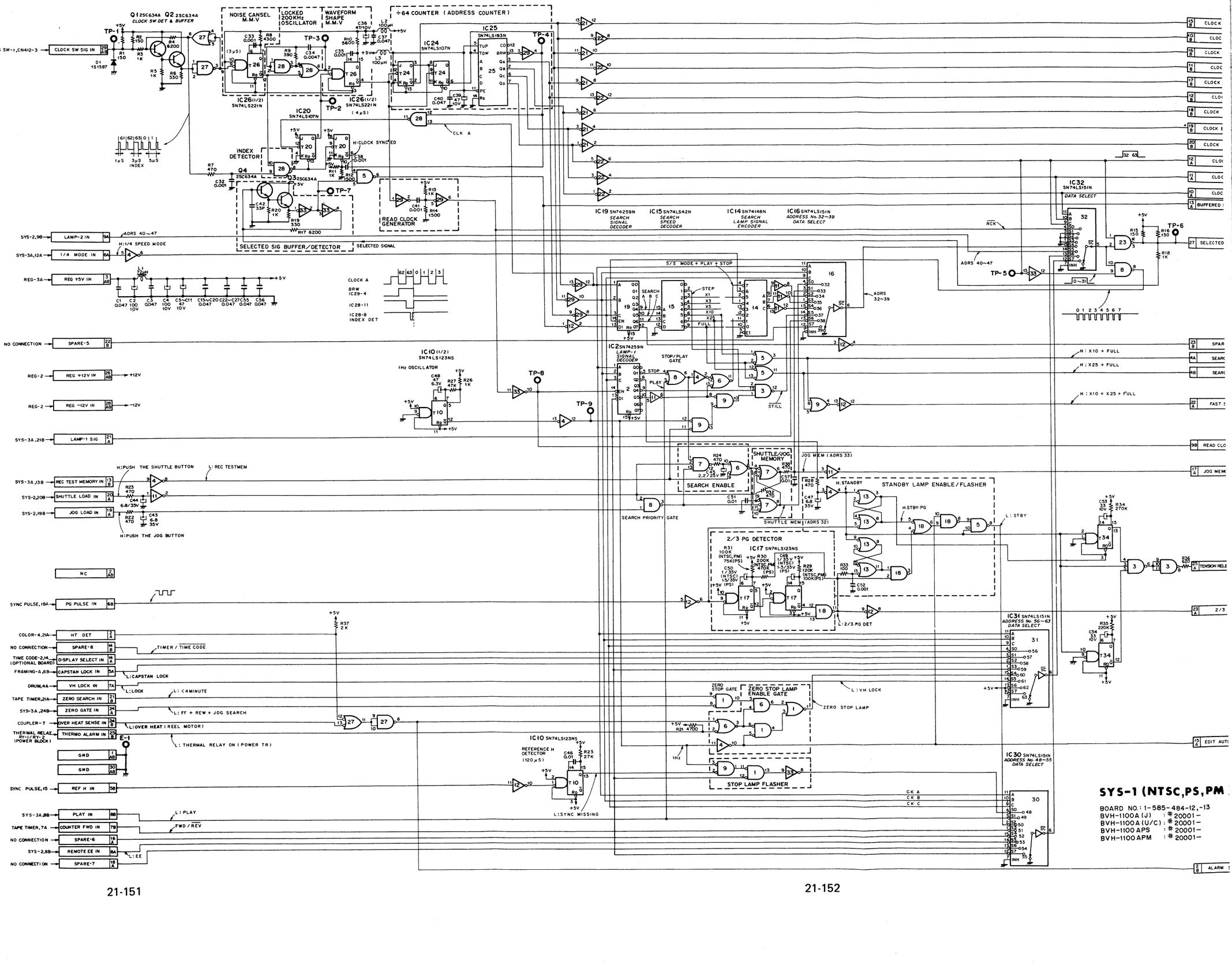

21-151

21-152

SYS-1

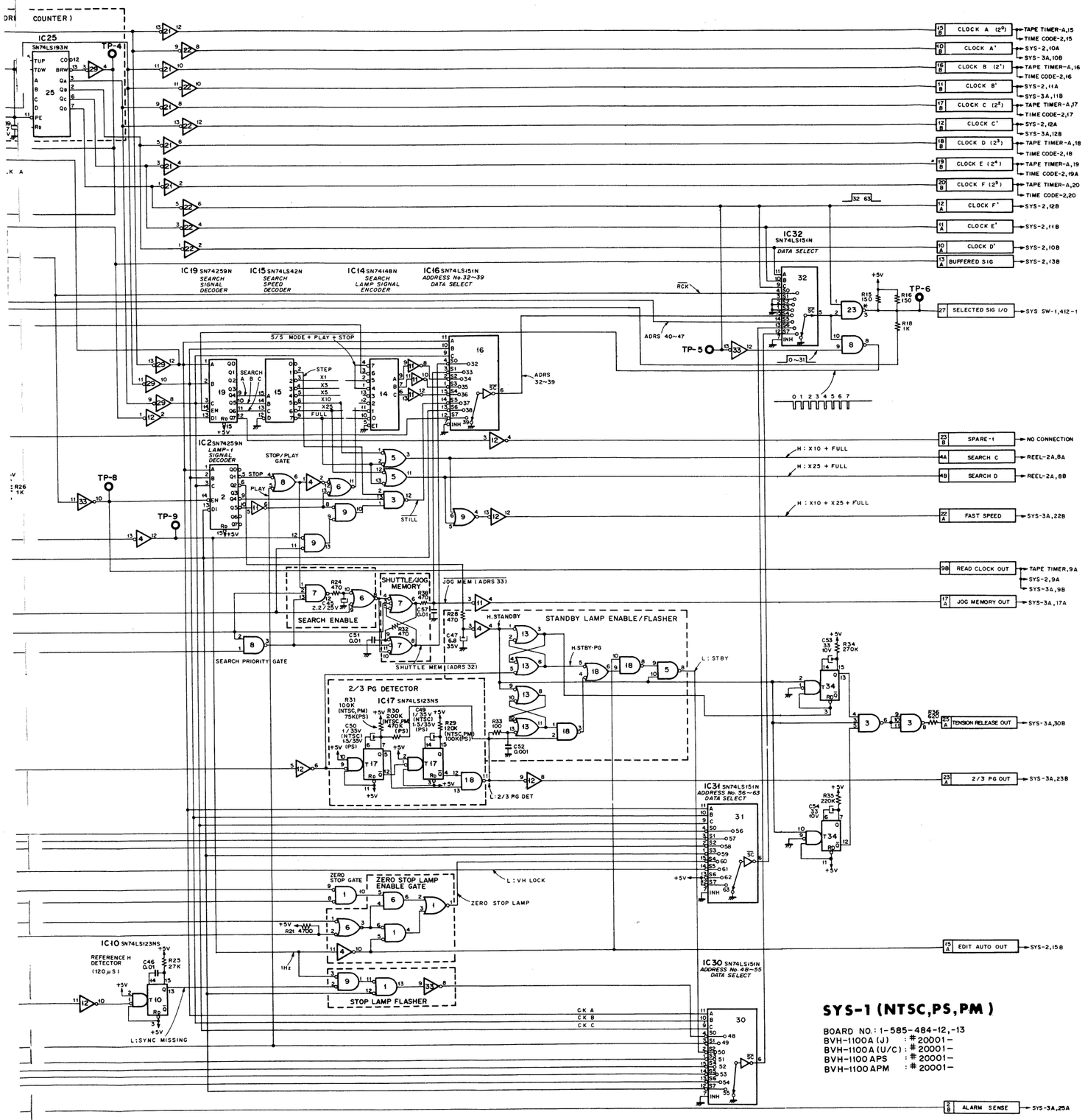

SYS-1 (NTSC,PS,PM)

BOARD NO.: 1-585-484-12,-13
BVH-1100A (J) : # 20001-
BVH-1100A (U/C) : # 20001-
BVH-1100 APS : # 20001-
BVH-1100 APM : # 20001-

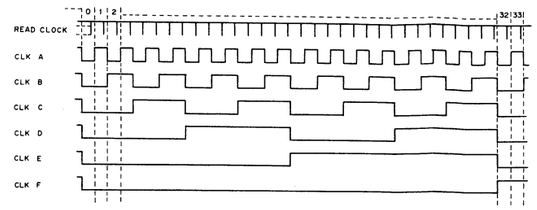

CLOCK C	B	A	LAMP 1 SIG	LAMP 2 SIG
1	1	1	TAPE UNTHREAD	REC LAMP
1	1	0	LAMP REV	AUD 3 400Hz LAMP
1	0	1	S/S MODE	AUD 3 REC LAMP
1	0	0	S/S STEPPING	AUD2 PRESET LAMP
0	1	1	DRUM LOCK	AUD1 PRESET LAMP
0	1	0	STAND BY	VIDEO PRESET LAMP
0	0	1	STOP MODE	ASSEM PRESET LAMP
0	0	0	STOP LAMP	EDIT LAMP

SEARCH A, B, C				SEARCH LAMP A, B, C			
SIG / MODE	(6) C	(5) B	(4) A	SIG / MODE	(36) C	(35) B	(34) A
OTHERS	0	0	0	OTHERS	0	0	0
STEP(1/3M)	0	0	1	1/4	0	0	1
X 1	0	1	0	X 1	0	1	0
X 3	0	1	1	X 3	0	1	1
X 5	1	0	0	X 5	1	0	0
X 10	1	0	1	X 10	1	0	1
X 25	1	1	0	X 25	1	1	0
FULL	1	1	1	FULL	1	1	1

NOTE : 1=L, 0=H OR ACTIVE LOW ON THE SELECTED SIG DATA BUS

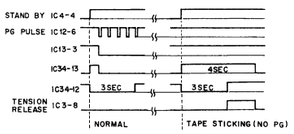

ADDRESS	REF. NO.	TYPE	PIN NO. Vcc : 5V	PIN NO. GND
2-A	IC1	SN74LS02N	14	7
2-B	2	SN74259N	16	8
2-C	3	SN74LS10N	14	7
2-D	4	SN74LS04N	14	7
2-E	5	SN74LS00N	14	7
3-A	6	SN74LS08N	14	7
3-B	7	SN74LS10N	14	7
3-C	8	SN74LS00N	14	7
3-D	9	SN74LS02N	14	7
3-E	10	SN74LS123NS	16	8
4-A	11	SN74LS14N	14	7
4-B	12	SN74LS04N	14	7
4-C	13	SN74LS00N	14	7
4-D	14	SN7148N	16	8
4-E	15	SN74LS42N	16	8
5-A	16	SN74LS151N	16	8
5-B	17	SN74LS123NS	16	8
5-C	18	SN74LS00N	14	7
5-D	19	SN74259N	16	8
5-E	20	SN74LS107N	14	7
6-A	21	SN74LS04N	14	7
6-B	22	SN74LS04N	14	7
6-E	23	SN75452BP / HD75452P	8	4
7-A	24	SN74LS107N	14	7
7-B	25	SN74LS193N	16	8
7-C	26	SN74LS221N	16	8
7-D	27	SN74LS00N	14	7
7-E	28	SN74LS00N	14	7
8-A	29	SN74LS04N	14	7
8-B	30	SN74LS151N	16	8
8-C	31	SN74LS151N	16	8
8-D	32	SN74LS151N	16	8
8-E	33	SN74LS04N	14	7
1-B	34	SN74LS123NS	16	8

• CHANGED

	U/C,PS : UP TO # 20599 J : UP TO # 20499 PM : UP TO # 20099	U/C,PS : #20601 & UP J : #20501 & UP PM : #20101 & UP
TP10	L1 TP10 00	L1 00
E2,3	E1 E2 E3 AB	E1 AB
IC8,27 33	12 13 8 11 5 6	12 13 27 11 9 10 27 8

SYSTEM CLOCK

SYSTEM SIGNAL (DATA ADDRESS)

ADDRESS	COMMAND	
0	FUNCTION A	COMMAND STROBE 1-2
1	FUNCTION B	
2	FUNCTION C	
3	COMMAND STROBE 1-1	
4	SEARCH A	
5	SEARCH B	
6	SEARCH C	
7	(AUTO MODE MASTER CMDS)	
8	EDIT BUTTON	COMMAND STROBE 2
9	ASSEMBLE PRESET BUTTON	
10	VIDEO PRESET BUTTON	
11	AUDIO CH-1 PRESET BUTTON	
12	AUDIO CH-2 PRESET BUTTON	
13	AUDIO CH-3 REC BUTTON	
14	REMOTE E-E BUTTON	
15	STANDBY BUTTON	
16	SPARE-2 (USER-BIT SEL-R)	
17	REC BUTTON (REC SAFETY)	COMMAND STROBE 3
18	AUDIO CH-3 400 Hz BUTTON	
19	TIMER RESET SW	
20	SHUTTLE BUTTON	COMMAND STROBE 1-2
21	JOG BUTTON	
22	(AUTO MODE MEMORY)	
23	REMOTE GO	
24	ZERO MEMORY-1 ON/OFF SW	
25	ZERO MEMORY-2 ON/OFF SW	
26	SPEED COMMAND	
27	REC SAFETY	
28	EXT SYNC/INPUT VIDEO SELECT	
29	COMMAND STROBE 3	
30	COMMAND STROBE 2	
31	COMMAND STROBE 1-2	

STATUS (MODE)

32	SHUTTLE LAMP
33	JOG LAMP
34	SEARCH LAMP A
35	SEARCH LAMP B
36	SEARCH LAMP C
37	STILL LAMP
38	REVERSE LAMP
39	SPARE
40	EDIT LAMP
41	ASSEMBLE LAMP
42	VIDEO LAMP
43	AUDIO CH-1 LAMP
44	AUDIO CH-2 LAMP
45	AUDIO CH-3 LAMP
46	AUDIO CH-3 400 Hz LAMP
47	REC LAMP
48	STOP LAMP
49	PLAY LAMP
50	STANDBY LAMP
51	COUNTER REV (TAPE DIRECTION)
52	AUTO MODE SLAVE READY
53	REMOTE E-E LAMP
54	(SPARE-REC INHIBIT)
55	TAPE UNTHREAD
56	SPARE
57	DISPLAY SELECT
58	CAPSTAN LOCK LAMP
59	DRUM LOCK LAMP
60	ZERO STOP LAMP
61	VH LOCK LAMP
62	REMOTE
63	(NO USED : INDEX)

SYS-2 BOARD — *COMPONENT SIDE* —

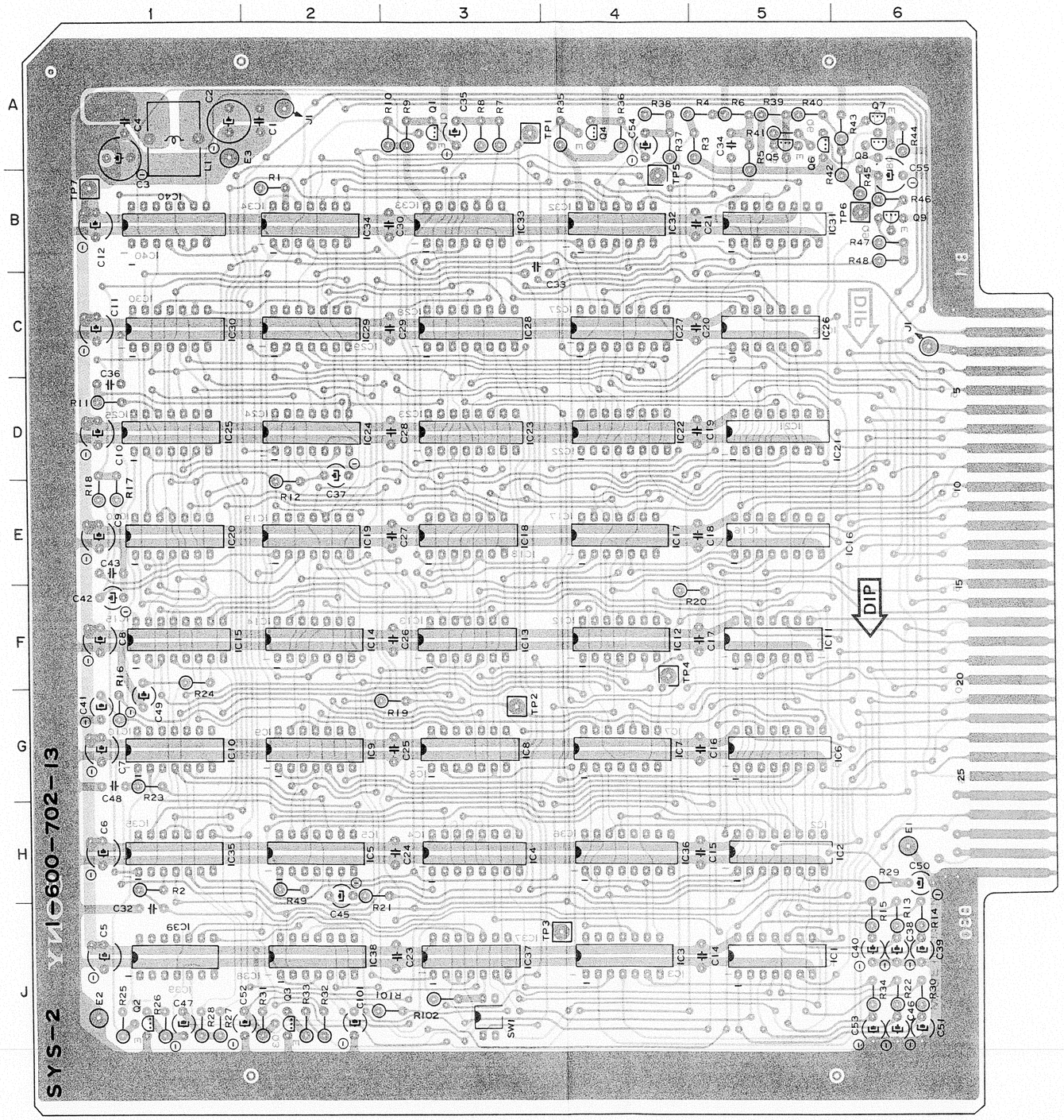

BVH-1100A (NTSC)
BVH-1100APS
BVH-1100APM
SYS-2 BOARD
1-600-702-13

E1 H - 6
E2 J - 1
E3 A - 1

IC1 J - 5
IC2 H - 5
IC3 J - 4
IC4 H - 3
IC5 H - 2
IC6 G - 5
IC7 G - 4
IC8 G - 3
IC9 G - 2
IC10 G - 1
IC11 F - 5
IC12 F - 4
IC13 F - 3
IC14 F - 2
IC15 F - 1
IC16 E - 5
IC17 E - 4
IC18 E - 3
IC19 E - 2
IC20 E - 1
IC21 D - 5
IC22 D - 4
IC23 D - 3
IC24 D - 2
IC25 D - 1
IC26 C - 5
IC27 C - 4
IC28 C - 3
IC29 C - 2
IC30 C - 1
IC31 B - 5
IC32 B - 4
IC33 B - 3
IC34 B - 2
IC35 H - 1
IC36 H - 4
IC37 J - 3
IC38 J - 2
IC39 J - 1
IC40 B - 1

Q1 A - 3
Q2 J - 1
Q3 J - 2
Q4 A - 4
Q5 A - 5
Q6 A - 5
Q7 A - 6
Q8 A - 6
Q9 B - 6

SW1 J - 3

TP1 A - 3
TP2 G - 3
TP3 J - 4
TP4 F - 4
TP5 H - 4
TP6 H - 6
TP7 H - 1

SYS-2 BOARD

System Control

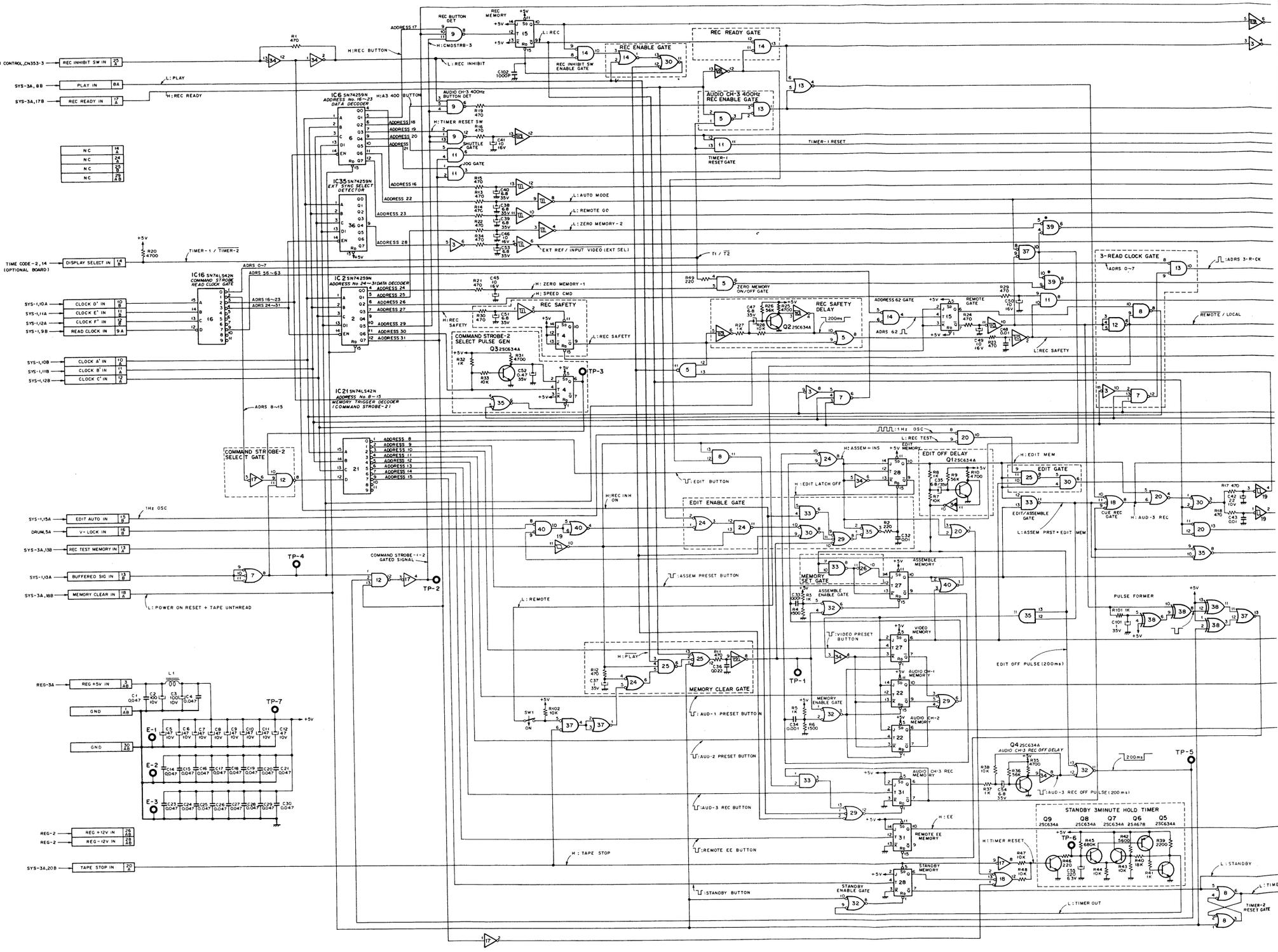

SYS-2

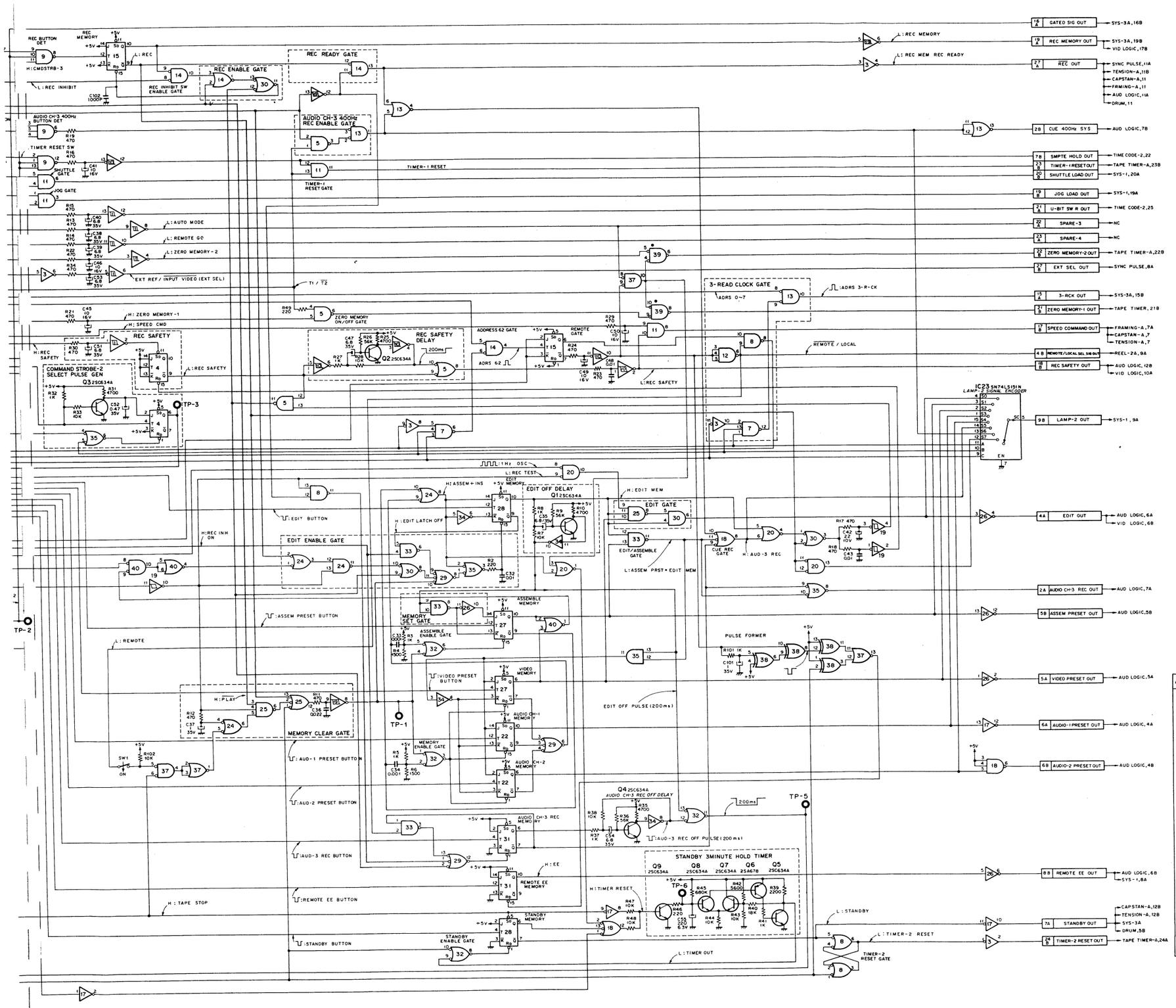

SYSTEM CLOCK

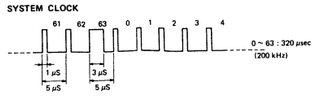

SYSTEM SIGNAL (DATA ADDRESS)

ADDRESS	COMMAND	
0	FUNCTION A	COMMAND STROBE 1-2
1	FUNCTION B	
2	FUNCTION C	
3	COMMAND STROBE 1-1	
4	SEARCH A	
5	SEARCH B	
6	SEARCH C	
7	(AUTO MODE MASTER CMDS)	
8	EDIT BUTTON	COMMAND STROBE 2
9	ASSEMBLE PRESET BUTTON	
10	VIDEO PRESET BUTTON	
11	AUDIO CH-1 PRESET BUTTON	
12	AUDIO CH-2 PRESET BUTTON	
13	AUDIO CH-3 REC BUTTON	
14	REMOTE E-E BUTTON	
15	STANDBY BUTTON	
16	SPARE-2 (USER-BIT SEL-R)	COMMAND STROBE 3
17	REC BUTTON (REC SAFETY)	
18	AUDIO CH-3 400 Hz BUTTON	
19	TIMER RESET SW	COMMAND STROBE 1-2
20	SHUTTLE BUTTON	
21	JOG BUTTON	
22	(AUTO MODE MEMORY)	
23	REMOTE GO	
24	ZERO MEMORY-1 ON/OFF SW	
25	ZERO MEMORY-2 ON/OFF SW	
26	SPEED COMMAND	
27	REC SAFETY	
28	EXT SYNC/INPUT VIDEO SELECT	
29	COMMAND STROBE 3	
30	COMMAND STROBE 2	
31	COMMAND STROBE 1-2	
	STATUS (MODE)	
32	SHUTTLE LAMP	
33	JOG LAMP	
34	SEARCH LAMP A	
35	SEARCH LAMP B	
36	SEARCH LAMP C	
37	STILL LAMP	
38	REVERSE LAMP	
39	SPARE	
40	EDIT LAMP	
41	ASSEMBLE LAMP	
42	VIDEO LAMP	
43	AUDIO CH-1 LAMP	
44	AUDIO CH-2 LAMP	
45	AUDIO CH-3 LAMP	
46	AUDIO CH-3 400 Hz LAMP	
47	REC LAMP	
48	STOP LAMP	
49	PLAY LAMP	
50	STANDBY LAMP	
51	COUNTER REV (TAPE DIRECTION)	
52	AUTO MODE SLAVE READY	
53	REMOTE E-E LAMP	
54	(SPARE-REC INHIBIT)	
55	TAPE UNTHREAD	
56	SPARE	
57	DISPLAY SELECT	
58	CAPSTAN LOCK LAMP	
59	DRUM LOCK LAMP	
60	ZERO STOP LAMP	
61	VH LOCK LAMP	
62	REMOTE	
63	(NO USED : INDEX)	

ADDRESS	REF. NO.	TYPE	PIN NO. Vcc : +5V	PIN NO. GND
1-A	IC1	SN74LS14N	14	7
1-B	2	SN74259N	16	8
2-B	3	SN74LS04N	14	7
2-C	4	SN74LS109N	16	8
2-D	5	SN74LS00N	14	7
3-A	6	SN74259N	16	8
3-B	7	SN74LS10N	14	7
3-C	8	SN74LS00N	14	7
3-D	9	SN74LS10N	14	7
3-E	10	SN74LS14N	14	7
4-A	11	SN74LS08N	14	7
4-B	12	SN74LS10N	14	7
4-C	13	SN74LS02N	14	7
4-D	14	SN74LS02N	14	7
4-E	15	SN74LS109N	16	8
5-A	16	SN74LS42N	16	8
5-B	17	SN74LS04N	14	7
5-C	18	SN74LS10N	14	7
5-D	19	SN74LS14N	14	7
5-E	20	SN74LS02N	14	7
6-A	21	SN74LS42N	16	8
6-B	22	SN74LS109N	16	8
6-C	23	SN74LS151N	16	8
6-D	24	SN74LS00N	14	7
6-E	25	SN74LS10N	14	7
7-A	26	SN74LS04N	14	7
7-B	27	SN74LS109N	16	8
7-C	28	SN74LS109N	16	8
7-D	29	SN74LS11N	14	7
7-E	30	SN74LS08N	14	7
8-A	31	SN74LS109N	16	8
8-B	32	SN74LS08N	14	7
8-C	33	SN74LS00N	14	7
8-D	34	SN74LS04N	14	7
2-E	35	SN74LS08N	14	7
1-C	36	SN74259N	16	8
	37	SN74LS02N	14	7
	38	SN74LS86N	14	7
	39	SN74LS32N	14	7
	40	SN74LS02N	14	7

SYS-2 (NTSC,PS,PM)

BOARD NO. : 1-600-702-13
BVH-1100A(J) : #20001—
BVH-1100A(U/C) : #20001—
BVH-1100APS : #20001—
BVH-1100APM : #20001—

SYS-3A BOARD — *COMPONENT SIDE* —

FORMER
NTSC; # 20001 – 20499
PS ; # 20001 – 20399

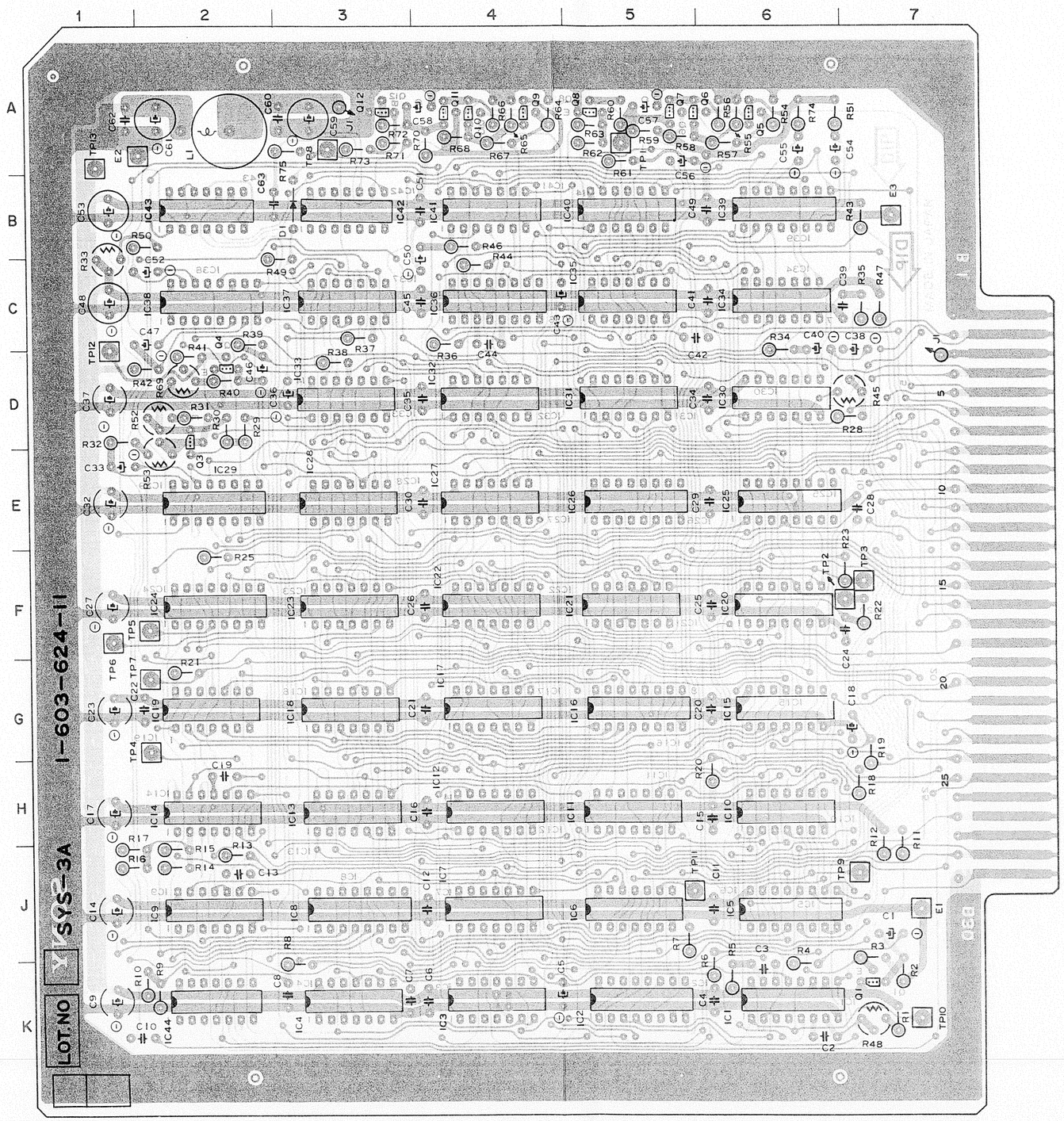

BVH-1100A (NTSC)
BVH-1100APS
BVH-1100APM
SYS-3A BOARD
1-603-624-11

D1 B - 3

E1 J - 7
E2 A - 1
E3 B - 7

IC1 K - 6
IC2 K - 5
IC3 K - 4
IC4 K - 3
IC5 J - 6
IC6 J - 5
IC7 J - 4
IC8 J - 3
IC9 J - 2
IC10 H - 6
IC11 H - 5
IC12 H - 4
IC13 H - 3
IC14 H - 2
IC15 G - 6
IC16 G - 5
IC17 G - 4
IC18 G - 3
IC19 G - 2
IC20 F - 6
IC21 F - 5
IC22 F - 4
IC23 F - 3
IC24 F - 2
IC25 E - 6
IC26 E - 5
IC27 E - 4
IC28 E - 3
IC29 E - 2
IC30 D - 6
IC31 D - 5
IC32 D - 4
IC33 D - 3
IC34 C - 6
IC35 C - 5
IC36 C - 4
IC37 C - 3
IC38 C - 2
IC39 B - 6
IC40 B - 5
IC41 B - 4
IC42 B - 3
IC43 B - 2
IC44 K - 2

Q1 K - 7
Q3 D - 2
Q4 D - 2
Q5 A - 6
Q6 A - 6
Q7 A - 5
Q8 A - 5
Q9 A - 4
Q10 A - 4
Q11 A - 4
Q12 A - 3

R33 B - 1
R45 D - 7
R48 K - 7
R52 D - 2
R53 E - 2
R69 D - 2

TP1 A - 5
TP2 F - 7
TP3 F - 7
TP4 G - 2
TP5 F - 2
TP6 F - 1
TP7 G - 2
TP8 A - 3
TP9 J - 7
TP10 K - 7
TP11 J - 5
TP12 D - 1
TP13 A - 1

FORMER
NTSC; # 20001 – 20499
PS ; # 20001 – 20399

SYS-3A BOARD

System Control

FORMER
NTSC; # 20001 – 20499
PS ; # 20001 – 20399

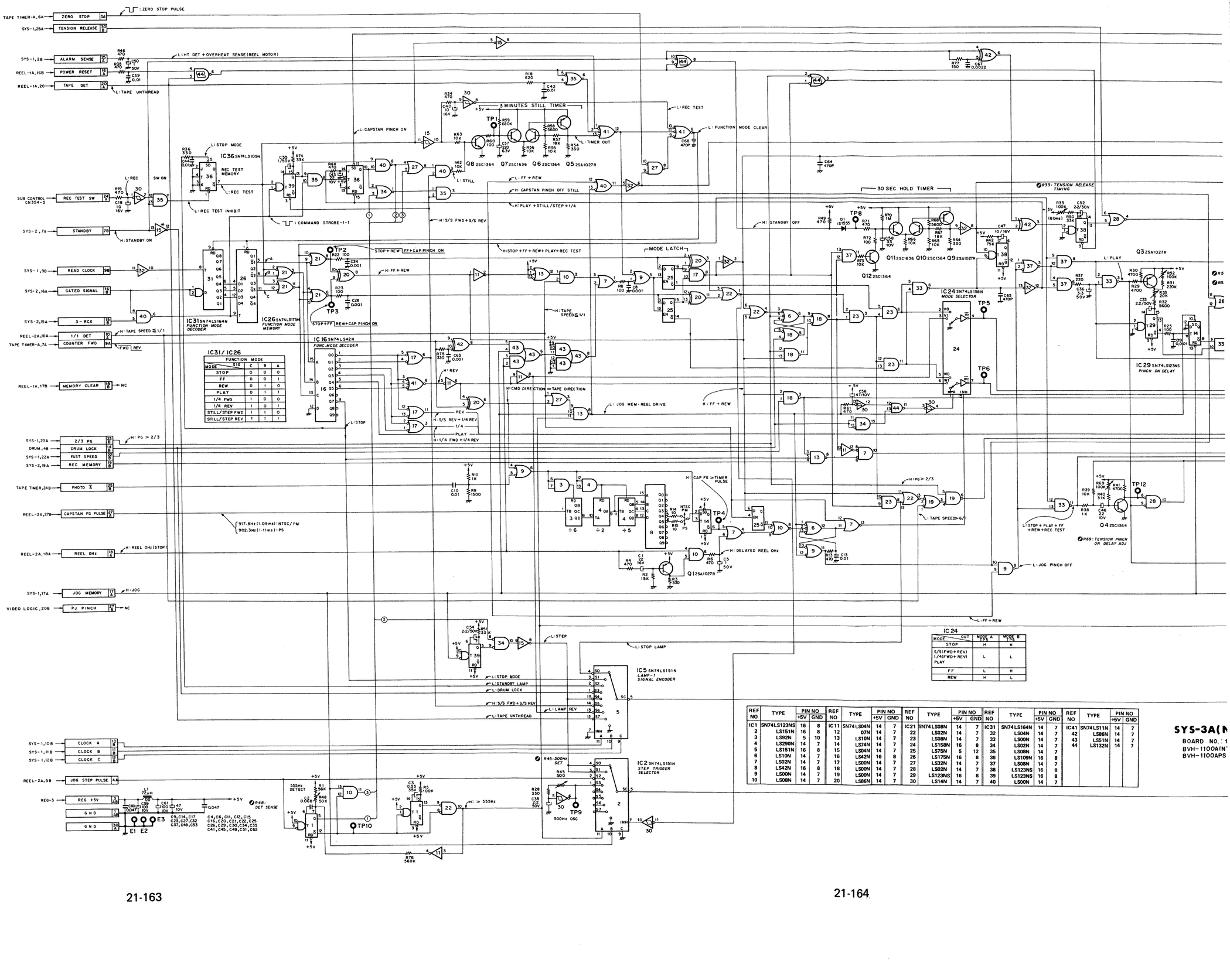

REF NO	TYPE	PIN NO +5V	PIN NO GND	REF NO	TYPE	PIN NO +5V	PIN NO GND	REF NO	TYPE	PIN NO +5V	PIN NO GND	REF NO	TYPE	PIN NO +5V	PIN NO GND	REF NO	TYPE	PIN NO +5V	PIN NO GND
IC1	SN74LS123NS	16	8	IC11	SN74LS04N	14	7	IC21	SN74LS08N	14	7	IC31	SN74LS164N	14	7	IC41	SN74LS11N	14	7
2	LS151N	16	8	12	07N	14	7	22	LS02N	14	7	32	LS04N	14	7	42	LS86N	14	7
3	LS92N	5	10	13	LS10N	14	7	23	LS08N	14	7	33	LS00N	14	7	43	LS51N	14	7
4	LS290N	14	7	14	LS74N	14	7	24	LS158N	16	8	34	LS02N	14	7	44	LS132N	14	7
5	LS151N	16	8	15	LS04N	14	7	25	LS75N	5	12	35	LS08N	14	7				
6	LS10N	14	7	16	LS42N	16	8	26	LS175N	16	8	36	LS109N	16	8				
7	LS02N	14	7	17	LS00N	14	7	27	LS32N	14	7	37	LS08N	14	7				
8	LS42N	16	8	18	LS00N	14	7	28	LS02N	14	7	38	LS123NS	16	8				
9	LS00N	14	7	19	LS00N	14	7	29	LS123NS	16	8	39	LS123NS	16	8				
10	LS08N	14	7	20	LS86N	14	7	30	LS14N	14	7	40	LS00N	14	7				

SYS-3A(N
BOARD NO.: 1
BVH-1100AIN
BVH-1100APS

SYS-3A

FORMER
NTSC; # 20001 – 20499
PS ; # 20001 – 20399

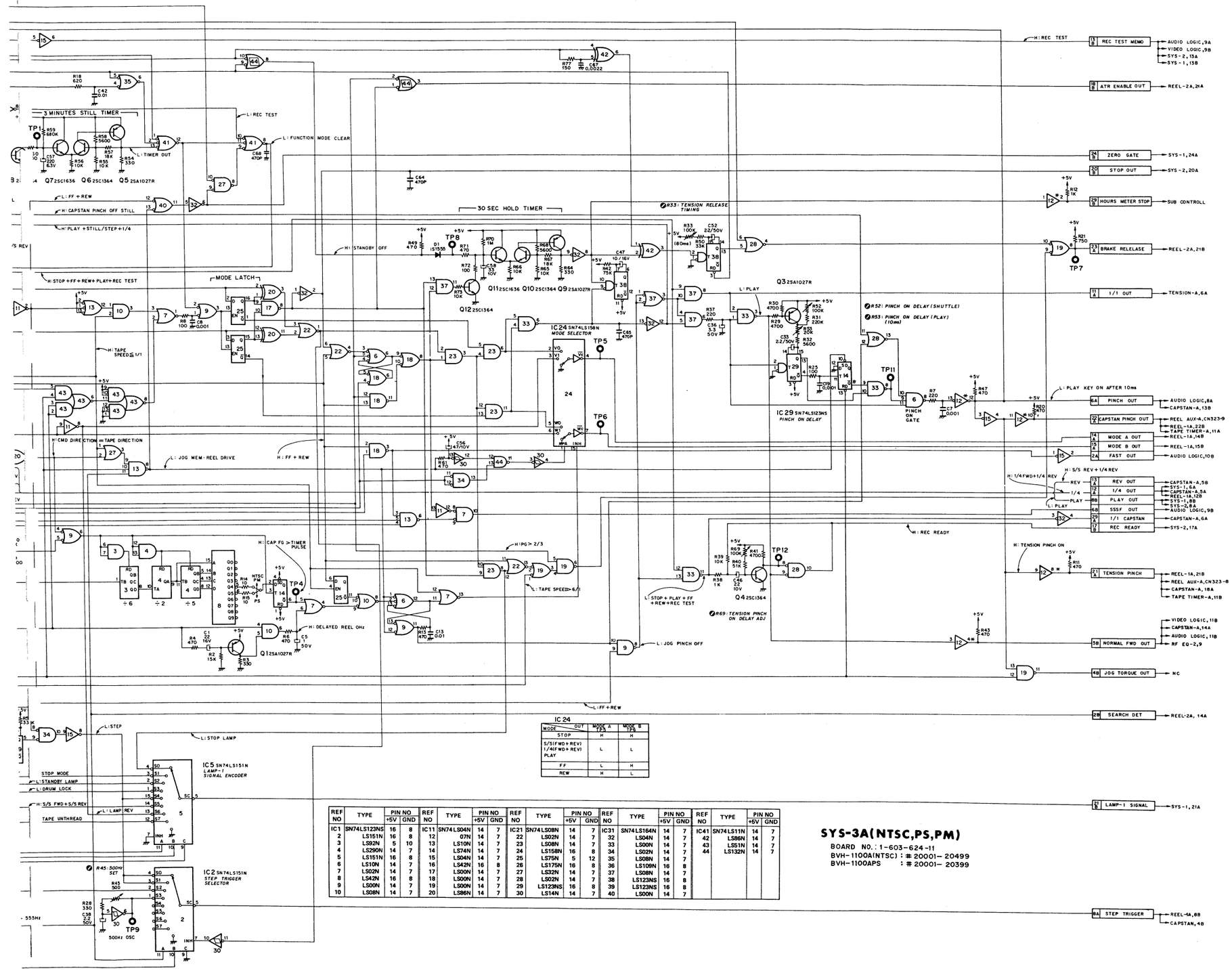

IC 24 OUT / MODE	MODE A 13	MODE B 12
STOP	H	H
S/S(FWD+REV) 1/4(FWD+REV) PLAY	L	L
FF	L	H
REW	H	L

REF NO	TYPE	PIN NO +5V	PIN NO GND	REF NO	TYPE	PIN NO +5V	PIN NO GND	REF NO	TYPE	PIN NO +5V	PIN NO GND	REF NO	TYPE	PIN NO +5V	PIN NO GND	REF NO	TYPE	PIN NO +5V	PIN NO GND
IC1	SN74LS123NS	16	8	IC11	SN74LS04N	14	7	IC21	SN74LS08N	14	7	IC31	SN74LS164N	14	7	IC41	SN74LS11N	14	7
2	LS151N	16	8	12	07N	14	7	22	LS02N	14	7	32	LS04N	14	7	42	LS86N	14	7
3	LS92N	5	10	13	LS10N	14	7	23	LS08N	14	7	33	LS00N	14	7	43	LS51N	14	7
4	LS290N	14	7	14	LS74N	14	7	24	LS158N	16	8	34	LS02N	14	7	44	LS132N	14	7
5	LS151N	16	8	15	LS04N	14	7	25	LS75N	5	12	35	LS08N	14	7				
6	LS10N	14	7	16	LS42N	16	8	26	LS175N	16	8	36	LS109N	16	8				
7	LS02N	14	7	17	LS00N	14	7	27	LS32N	14	7	37	LS08N	14	7				
8	LS42N	16	8	18	LS00N	14	7	28	LS02N	14	7	38	LS123NS	16	8				
9	LS00N	14	7	19	LS00N	14	7	29	LS123NS	16	8	39	LS123NS	16	8				
10	LS08N	14	7	20	LS86N	14	7	30	LS14N	14	7	40	LS00N	14	7				

SYS-3A(NTSC,PS,PM)

BOARD NO. : 1-603-624-11
BVH-1100A(NTSC) : # 20001– 20499
BVH-1100APS : # 20001– 20399

• CHANGED

UP TO # 20099	# 20101 & UP
R79 7500 W	R78, R79 : DELETED
IC44 SN74LS00N	IC44 SN74LS132N : CHANGED

SYS-3A BOARD — *COMPONENT SIDE* —

NEW
NTSC; # 20501 –
PS ; # 20401 –

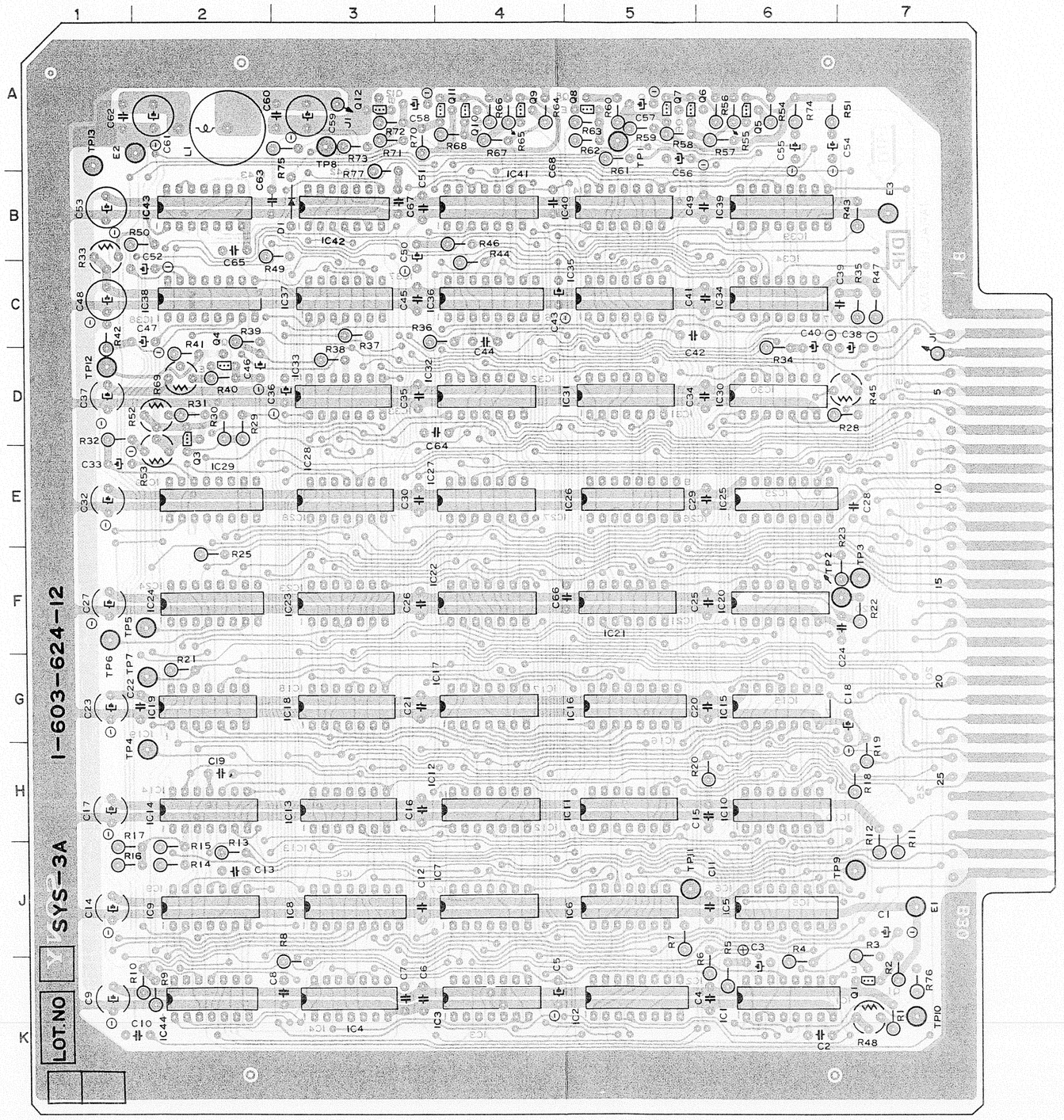

BVH-1100A (NTSC)
BVH-1100APS
BVH-1100APM
SYS-3A BOARD
1-603-624-12

D1 B - 3

E1 J - 7
E2 A - 1
E3 B - 7

IC1 K - 6
IC2 K - 5
IC3 K - 4
IC4 K - 3
IC5 J - 6
IC6 J - 5
IC7 J - 4
IC8 J - 3
IC9 J - 2
IC10 H - 6
IC11 H - 5
IC12 H - 4
IC13 H - 3
IC14 H - 2
IC15 G - 6
IC16 G - 5
IC17 G - 4
IC18 G - 3
IC19 G - 2
IC20 F - 6
IC21 F - 5
IC22 F - 4
IC23 F - 3
IC24 F - 2
IC25 E - 6
IC26 E - 5
IC27 E - 4
IC28 E - 3
IC29 E - 2
IC30 D - 6
IC31 D - 5
IC32 D - 4
IC33 D - 3
IC34 C - 6
IC35 C - 5
IC36 C - 4
IC37 C - 3
IC38 C - 2
IC39 B - 6
IC40 B - 5
IC41 B - 4
IC42 B - 3
IC43 B - 2
IC44 K - 2

Q1 K - 7
Q3 D - 2
Q4 D - 2
Q5 A - 6
Q6 A - 6
Q7 A - 5
Q8 A - 5
Q9 A - 4
Q10 A - 4
Q11 A - 4
Q12 A - 3

R33 B - 1
R45 D - 7
R48 K - 7
R52 D - 2
R53 E - 2
R69 D - 2

TP1 A - 5
TP2 F - 6
TP3 F - 7
TP4 G - 2
TP5 F - 2
TP6 F - 1
TP7 G - 2
TP8 A - 3
TP9 J - 7
TP10 K - 7
TP11 J - 5
TP12 D - 1
TP13 A - 1

NEW
NTSC; # 20501 –
PS ; # 20401 –

SYS-3A BOARD
System Control

NEW
NTSC; # 20501 –
PS ; # 20401 –

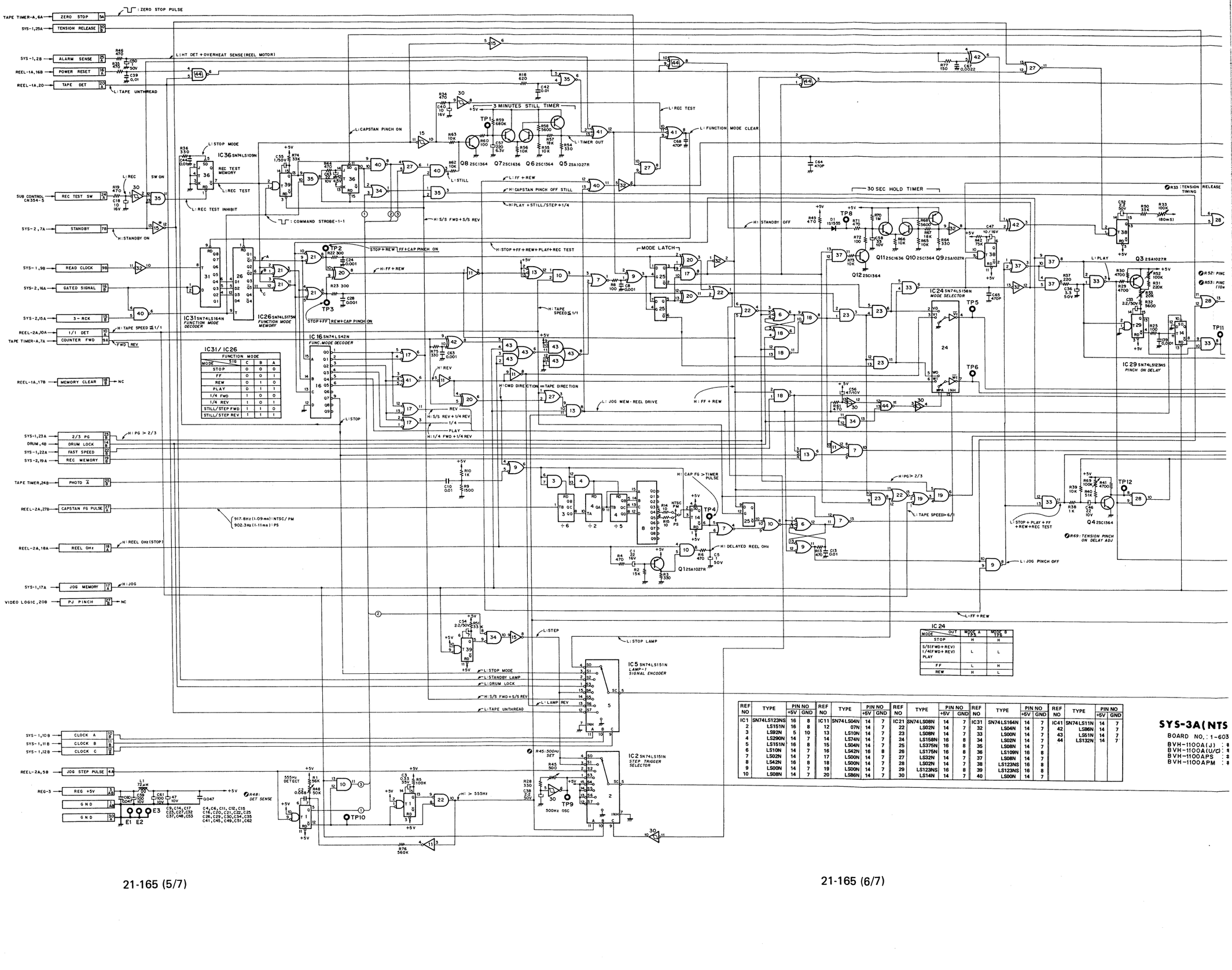

21-165 (5/7)

REF NO	TYPE	PIN NO +5V	PIN NO GND	REF NO	TYPE	PIN NO +5V	PIN NO GND	REF NO	TYPE	PIN NO +5V	PIN NO GND	REF NO	TYPE	PIN NO +5V	PIN NO GND	REF NO	TYPE	PIN NO +5V	PIN NO GND
IC1	SN74LS123NS	16	8	IC11	SN74LS04N	14	7	IC21	SN74LS08N	14	7	IC31	SN74LS164N	14	7	IC41	SN74LS11N	14	7
2	LS151N	16	8	12	07N	14	7	22	LS02N	14	7	32	LS04N	14	7	42	LS86N	14	7
3	LS92N	5	10	13	LS10N	14	7	23	LS08N	14	7	33	LS00N	14	7	43	LS51N	14	7
4	LS290N	14	7	14	LS74N	14	7	24	LS158N	16	8	34	LS02N	14	7	44	LS132N	14	7
5	LS151N	16	8	15	LS04N	14	7	25	LS375N	16	8	35	LS08N	14	7				
6	LS10N	14	7	16	LS42N	16	8	26	LS175N	16	8	36	LS109N	16	8				
7	LS02N	14	7	17	LS00N	14	7	27	LS32N	14	7	37	LS08N	14	7				
8	LS42N	16	8	18	LS00N	14	7	28	LS02N	14	7	38	LS123NS	16	8				
9	LS00N	14	7	19	LS00N	14	7	29	LS123NS	16	8	39	LS123NS	16	8				
10	LS08N	14	7	20	LS86N	14	7	30	LS14N	14	7	40	LS00N	14	7				

SYS-3A(NTS

BOARD NO.: 1-603

BVH-1100A(J) :
BVH-1100A(U/C) :
BVH-1100APS :
BVH-1100APM :

21-165 (6/7)

SYS-3A

NEW
NTSC; # 20501 –
PS ; # 20401 –

STILL TIMER

30 SEC HOLD TIMER

MODE LATCH

IC24 SN74LS156N
MODE SELECTOR

IC29 SN74LS123NS
PINCH ON DELAY

IC5 SN74LS151N
LAMP-1 SIGNAL ENCODER

IC2 SN74LS151N
STEP TRIGGER SELECTOR

500Hz OSC

Q6 2SC1364 Q5 2SA1027R

Q11 2SC1636 Q10 2SC1364 Q9 2SA1027R

Q12 2SC1364

Q3 2SA1027R

Q4 2SC1364

Q12 2SA1027R

R33 : TENSION RELEASE TIMING

R52 : PINCH ON DELAY (SHUTTLE)

R53 : PINCH ON DELAY (PLAY) (10ms)

R69 : TENSION PINCH ON DELAY ADJ

L: PLAY KEY ON AFTER 10ms

3 B	REC TEST MEMO	→	AUDIO LOGIC, 9A VIDEO LOGIC, 9B SYS-2, 13A SYS-1, 13B
18 B	ATR ENABLE OUT	→	REEL-2A, 2H
24 B	ZERO GATE	→	SYS-1, 24A
50 B	STOP OUT	→	SYS-2, 20A
59 B	HOURS METER STOP	→	SUB CONTROLL
23 A	BRAKE RELEASE	→	REEL-2A, 21B
11 A	1/1 OUT	→	TENSION-A, 6A
6A	PINCH OUT	→	AUDIO LOGIC, 8A CAPSTAN-A, 13B
22 A	CAPSTAN PINCH OUT	→	REEL AUX-A, CN323-9 REEL-1A, 22B TAPE TIMER-A, 11A REEL-1A, 14B
14 A	MODE A OUT	→	REEL-1A, 15B
15 A	MODE B OUT	→	AUDIO LOGIC, 10B
2A	FAST OUT	→	
13 A	REV OUT	→	CAPSTAN-A, 5B
12 A	1/4 OUT	→	SYS-1, 6A CAPSTAN-A, 5A REEL-1A, 12B
9B	PLAY OUT	→	SYS-1, 8B SYS-2, 8A
5B	SSSF OUT	→	AUDIO LOGIC, 9B
29 A	1/1 CAPSTAN	→	CAPSTAN-A, 6A
17 B	REC READY	→	SYS-2, 17A
21 A	TENSION PINCH	→	REEL-1A, 21B REEL AUX-A, CN323-8 CAPSTAN-A, 18A TAPE TIMER-A, 11B
5B	NORMAL FWD OUT	→	VIDEO LOGIC, 11B CAPSTAN-A, 14A AUDIO LOGIC, 11B RF EQ-2, 9
4B	JOG TORQUE OUT	→	NC
28	SEARCH DET	→	REEL-2A, 14A
21 B	LAMP-1 SIGNAL	→	SYS-1, 21A
8A	STEP TRIGGER	→	REEL-4A, 8B CAPSTAN, 4B

IC 24

MODE \ OUT	MODE A TP5	MODE B TP6
STOP	H	H
S/S(FWD+REV) 1/4(FWD+REV) PLAY	L	L
FF	L	H
REW	H	L

REF NO	TYPE	PIN NO +5V	PIN NO GND	REF NO	TYPE	PIN NO +5V	PIN NO GND	REF NO	TYPE	PIN NO +5V	PIN NO GND	REF NO	TYPE	PIN NO +5V	PIN NO GND	REF NO	TYPE	PIN NO +5V	PIN NO GND
IC1	SN74LS123NS	16	8	IC11	SN74LS04N	14	7	IC21	SN74LS08N	14	7	IC31	SN74LS164N	14	7	IC41	SN74LS11N	14	7
2	LS151N	16	8	12	07N	14	7	22	LS02N	14	7	32	LS04N	14	7	42	LS86N	14	7
3	LS92N	5	10	13	LS10N	14	7	23	LS08N	14	7	33	LS00N	14	7	43	LS51N	14	7
4	LS290N	14	7	14	LS74N	14	7	24	LS158N	16	8	34	LS02N	14	7	44	LS132N	14	7
5	LS151N	16	8	15	LS04N	14	7	25	LS375N	16	8	35	LS08N	14	7				
6	LS10N	14	7	16	LS42N	16	8	26	LS175N	16	8	36	LS109N	16	8				
7	LS02N	14	7	17	LS00N	14	7	27	LS32N	14	7	37	LS08N	14	7				
8	LS42N	16	8	18	LS00N	14	7	28	LS02N	14	7	38	LS123NS	16	8				
9	LS00N	14	7	19	LS00N	14	7	29	LS123NS	16	8	39	LS123NS	16	8				
10	LS08N	14	7	20	LS86N	14	7	30	LS14N	14	7	40	LS00N	14	7				

SYS-3A(NTSC,PS,PM)

BOARD NO. : 1-603-624-12

BVH-1100A(J) : # 20501 & UP
BVH-1100A(U/C) : # 20501 & UP
BVH-1100APS : # 20401 & UP
BVH-1100APM : # 20001–

• CHANGED

UP TO # 20099	# 20101 & UP
R79 7500	R78, R79 : DELETED
IC44 SN74LS00N	IC44 SN74LS132N : CHANGED

SYS SW-1 SYS SW-1

SYS SW-1 BOARD – *COMPONENT SIDE* –

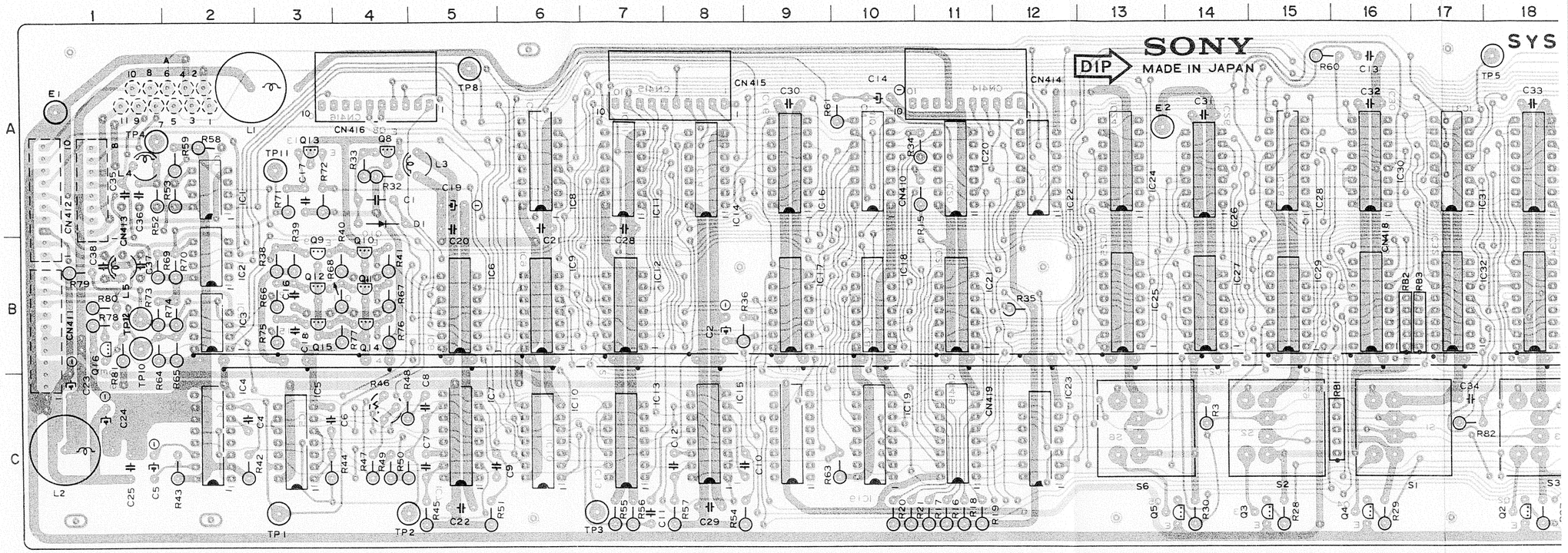

SYS SW-1 SYS SW-1

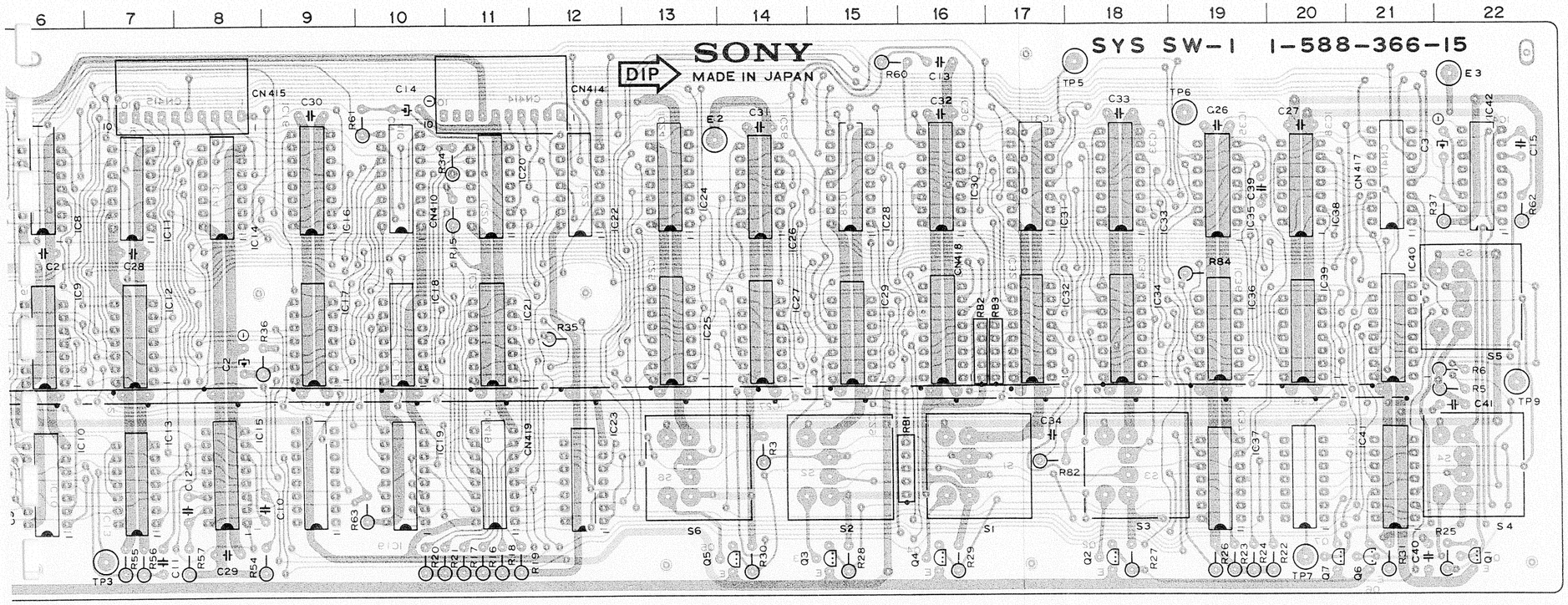

BVH-1100A (NTSC)
BVH-1100APS
BVH-1100APM
SYS SW-1 BOARD
1-588-366-15

D1	A - 4	Q1	C - 22
		Q2	C - 18
E1	A - 1	Q3	C - 15
E2	A - 13	Q4	C - 16
E3	A - 22	Q5	C - 14
		Q6	C - 21
IC1	A - 2	Q7	C - 20
IC2	B - 2	Q8	A - 4
IC3	B - 2	Q9	B - 3
IC4	C - 2	Q10	B - 4
IC5	C - 3	Q11	B - 4
IC6	B - 5	Q12	B - 3
IC7	C - 5	Q13	A - 3
IC8	A - 6	Q14	B - 4
IC9	B - 6	Q15	B - 3
IC10	C - 6	Q16	B - 1
IC11	A - 7		
IC12	B - 7	R46	C - 4
IC13	C - 7		
IC14	A - 8	S1	C - 16
IC15	C - 8	S2	C - 15
IC16	A - 9	S3	C - 18
IC17	B - 9	S4	C - 22
IC18	B - 10	S5	B - 22
IC19	C - 10	S6	C - 13
IC20	A - 11		
IC21	B - 11	TP1	C - 3
IC22	A - 12	TP2	C - 4
IC23	C - 12	TP3	C - 7
IC24	A - 13	TP4	A - 1
IC25	B - 13	TP5	A - 18
IC26	A - 14	TP6	A - 19
IC27	B - 14	TP7	C - 20
IC28	A - 15	TP8	A - 5
IC29	B - 15	TP9	B - 22
IC30	A - 16	TP10	B - 1
IC31	A - 17	TP11	A - 3
IC32	B - 17	TP12	B - 2
IC33	A - 18		
IC34	B - 18		
IC35	A - 19		
IC36	B - 19		
IC37	C - 19		
IC38	A - 20		
IC39	B - 20		
IC40	B - 21		
IC41	C - 21		
IC42	A - 22		

SYS SW-1 BOARD

System Control

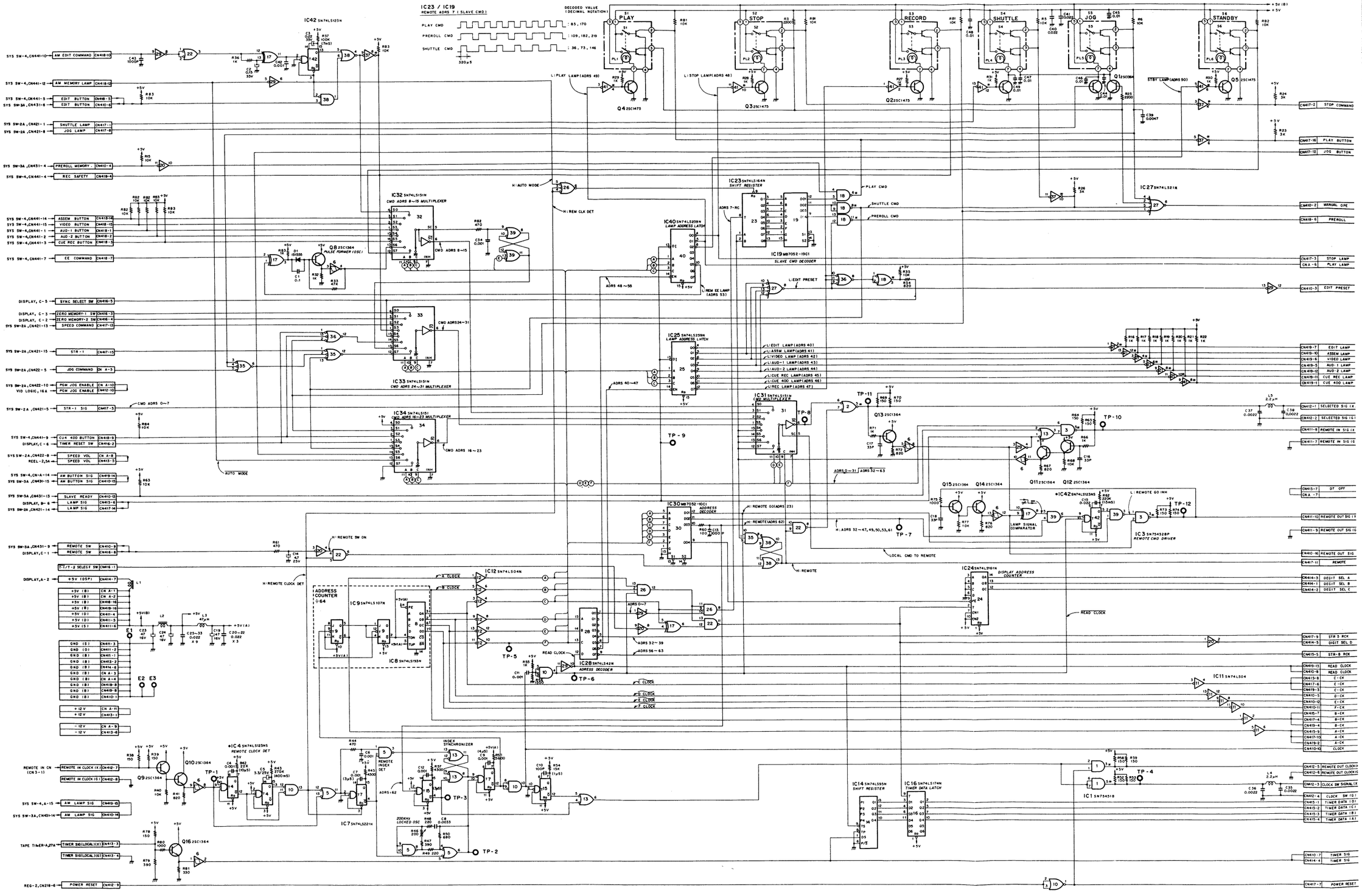

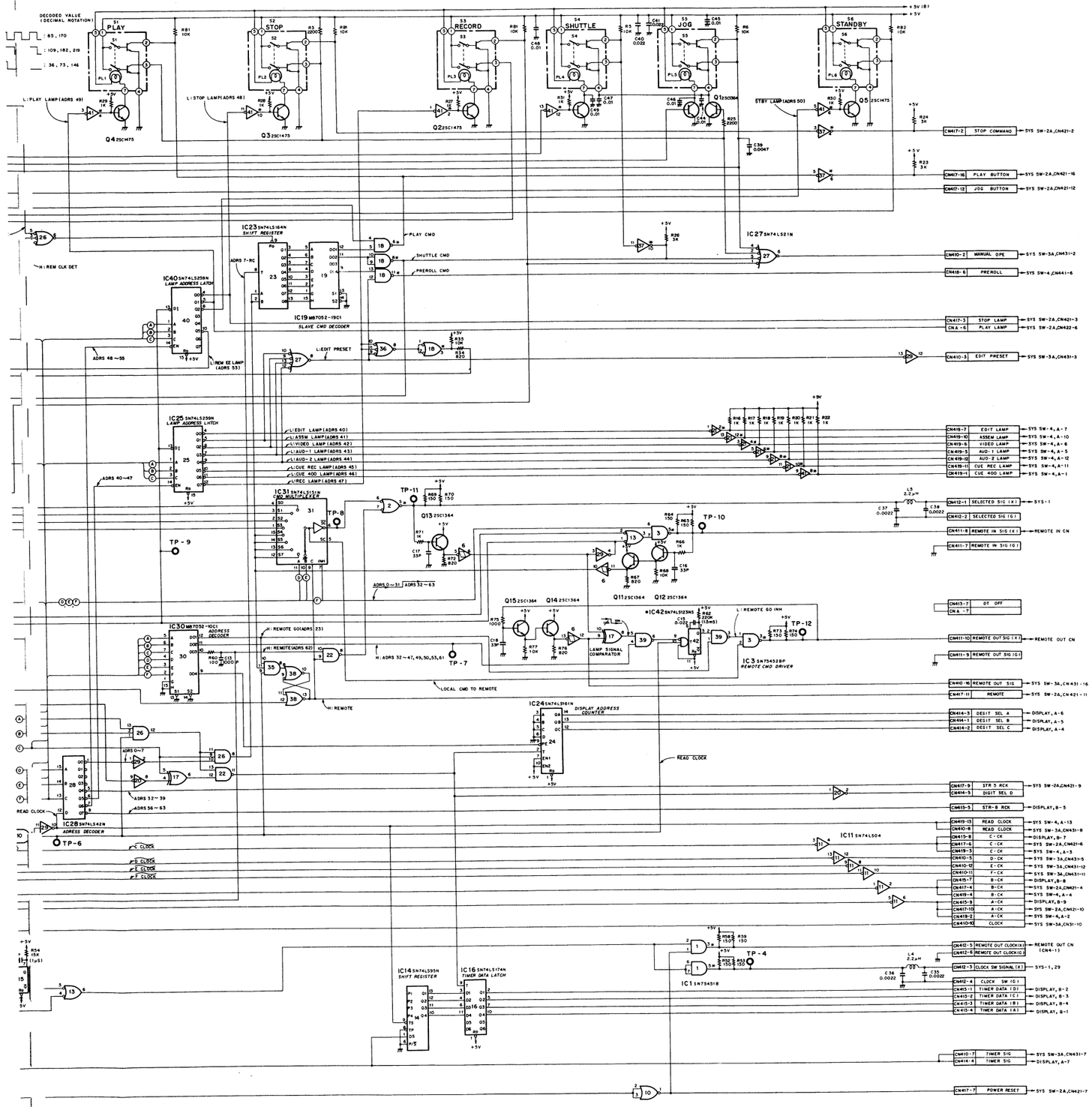

SYSTEM CLOCK

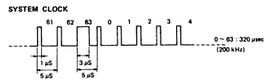

SYSTEM SIGNAL (DATA ADDRESS)

ADDRESS	COMMAND	
0	FUNCTION A	COMMAND STROBE 1-2
1	FUNCTION B	
2	FUNCTION C	
3	COMMAND STROBE 1-1	
4	SEARCH A	
5	SEARCH B	
6	SEARCH C	
7	(AUTO MODE MASTER CMDS)	
8	EDIT BUTTON	COMMAND STROBE 2
9	ASSEMBLE PRESET BUTTON	
10	VIDEO PRESET BUTTON	
11	AUDIO CH-1 PRESET BUTTON	
12	AUDIO CH-2 PRESET BUTTON	
13	AUDIO CH-3 REC BUTTON	
14	REMOTE E-E BUTTON	
15	STANDBY BUTTON	
16	SPARE 2 (USER-BIT SEL-R)	COMMAND STROBE 3
17	REC BUTTON (REC SAFETY)	
18	AUDIO CH-3 400 Hz BUTTON	
19	TIMER RESET SW	
20	SHUTTLE BUTTON	COMMAND STROBE 1-2
21	JOG BUTTON	
22	(AUTO MODE MEMORY)	
23	REMOTE GO	
24	ZERO MEMORY-1 ON/OFF SW	
25	ZERO MEMORY-2 ON/OFF SW	
26	SPEED COMMAND	
27	REC SAFETY	
28	EXT SYNC/INPUT VIDEO SELECT	
29	COMMAND STROBE 3	
30	COMMAND STROBE 2	
31	COMMAND STROBE 1-2	
	STATUS (MODE)	
32	SHUTTLE LAMP	
33	JOG LAMP	
34	SEARCH LAMP A	
35	SEARCH LAMP B	
36	SEARCH LAMP C	
37	STILL LAMP	
38	REVERSE LAMP	
39	SPARE	
40	EDIT LAMP	
41	ASSEMBLE LAMP	
42	VIDEO LAMP	
43	AUDIO CH-1 LAMP	
44	AUDIO CH-2 LAMP	
45	AUDIO CH-3 LAMP	
46	AUDIO CH-3 400 Hz LAMP	
47	REC LAMP	
48	STOP LAMP	
49	PLAY LAMP	
50	STANDBY LAMP	
51	COUNTER REV (TAPE DIRECTION)	
52	AUTO MODE SLAVE READY	
53	REMOTE E-E LAMP	
54	(SPARE REC INHIBIT)	
55	TAPE UNTHREAD	
56	SPARE	
57	DISPLAY SELECT	
58	CAPSTAN LOCK LAMP	
59	DRUM LOCK LAMP	
60	ZERO STOP LAMP	
61	VHI LOCK LAMP	
62	REMOTE	
63	(NO USED : INDEX)	

IC19
MB7052-19C1
PROGRAMMED DATA

WORD (ADDRESS)	DATA OUTPUTS (IN HEXA-DECIMAL)
0 ~ 15	0, 0, 0, 0, 0, 0, 0, 0, 0, 0, 0, 0, 0, 0, 0, 0,
16 ~ 31	0, 0, 0, 0, 0, 0, 0, 0, 0, 0, 0, 0, 0, 0, 0, 0,
32 ~ 47	0, 0, 0, 0, 1, 0, 0, 0, 0, 0, 0, 0, 0, 0, 0, 0,
48 ~ 63	0, 0, 0, 4, 0, 0, 0, 0, 0, 0, 0, 0, 0, 0, 0, 0,
64 ~ 79	0, 0, 0, 0, 0, 0, 0, 0, 0, 0, 0, 0, 0, 0, 0, 0,
80 ~ 95	0, 0, 0, 0, 0, 1, 0, 0, 0, 0, 0, 0, 0, 0, 0, 0,
96 ~ 111	0, 0, 0, 0, 0, 0, 4, 0, 0, 0, 0, 0, 8, 0, 0, 0,
112 ~ 127	0, 0, 0, 0, 0, 0, 0, 0, 0, 0, 0, 0, 0, 0, 0, 0,
128 ~ 143	0, 0, 0, 0, 0, 0, 0, 0, 0, 0, 0, 0, 0, 0, 0, 0,
144 ~ 159	0, 0, 8, 0, 0, 0, 0, 0, 4, 0, 0, 0, 0, 0, 0, 0,
160 ~ 175	0, 0, 0, 0, 0, 0, 0, 0, 0, 1, 0, 0, 0, 0, 0, 0,
176 ~ 191	0, 0, 0, 0, 0, 0, 8, 0, 0, 0, 0, 0, 0, 0, 0, 0,
192 ~ 207	0, 0, 0, 0, 0, 0, 0, 0, 0, 0, 0, 0, 4, 0, 0, 0,
208 ~ 223	0, 0, 0, 0, 0, 0, 0, 0, 0, 0, 8, 0, 0, 0, 0, 0,
224 ~ 239	0, 0, 0, 0, 0, 0, 0, 0, 0, 0, 0, 0, 0, 0, 0, 0,
240 ~ 255	0, 0, 0, 0, 0, 0, 0, 0, 0, 0, 0, 0, 0, 0, 0, 0.

IC30
MB7052-10C1
PROGRAMMED DATA

WORD (ADDRESS)	DATA OUTPUTS (IN HEXA-DECIMAL)
0 ~ 15	0, 0, 0, 0, 0, 0, 0, 0, 8, 8, 8, 8, 8, 8, 8, 8,
16 ~ 31	8, 8, 8, 8, 8, 8, 8, 9, 8, 8, 8, 8, 8, 8, 8, 8,
32 ~ 47	A, A, A, A, A, A, A, A, A, A, A, A, A, A, A, A,
48 ~ 63	8, A, A, 8, 8, A, 8, 8, 8, 8, 8, 8, 8, 8, A, C, 8,
64 ~ 79	F, F, F, F, F, F, F, F, F, F, F, F, F, F, F, F,
80 ~ 95	F, F, F, F, F, F, F, F, F, F, F, F, F, F, F, F,
96 ~ 111	F, F, F, F, F, F, F, F, F, F, F, F, F, F, F, F,
112 ~ 127	F, F, F, F, F, F, F, F, F, F, F, F, F, F, F, F,
128 ~ 143	F, F, F, F, F, F, F, F, F, F, F, F, F, F, F, F,
144 ~ 159	F, F, F, F, F, F, F, F, F, F, F, F, F, F, F, F,
160 ~ 175	F, F, F, F, F, F, F, F, F, F, F, F, F, F, F, F,
176 ~ 191	F, F, F, F, F, F, F, F, F, F, F, F, F, F, F, F,
192 ~ 207	F, F, F, F, F, F, F, F, F, F, F, F, F, F, F, F,
208 ~ 223	F, F, F, F, F, F, F, F, F, F, F, F, F, F, F, F,
224 ~ 239	F, F, F, F, F, F, F, F, F, F, F, F, F, F, F, F,
240 ~ 255	F, F, F, F, F, F, F, F, F, F, F, F, F, F, F, F.

* CHANGED

	NTSC : UP TO 20099 PS : UP TO 20099	NTSC : ■ 20101 & UP PS : ■ 20101 & UP
IC4, 42	SN74LS123N	SN74LS123NS

REF. NO.	TYPE	PIN NO. +5V	PIN NO. GND
IC 1	SN754518P	8	4
2	SN754518P	8	4
3	SN754528P	8	4
4	SN74LS123NS	16	8
5	SN74LS00N	14	7
6	SN74LS14N	14	7
7	SN74LS221N	16	8
8	SN74LS193N	16	8
9	SN74LS107N	14	7
10	SN74LS02N	14	7
11	SN74LS04N	14	7
12	SN74LS04N	14	7
13	SN74LS00N	14	7
14	SN74LS95BN	14	7
15	SN74LS221N	16	8
16	SN74LS174N	16	8
17	SN74LS86N	14	7
18	SN74LS03N	14	7
19	MB7052-19C1	16	8
20	SN74LS04N	14	7
21	SN74LS06N	14	7
22	SN74LS00N	14	7
23	SN74LS164N	14	7
24	SN74LS161N	16	8
25	SN74LS258AN	16	8
26	SN74LS11N	14	7
27	SN74LS21N	14	7
28	SN74LS42N	16	8
29	SN74LS04N	14	7
30	MB7052-10C1	16	8
31	SN74LS151N	16	8
32	SN74LS151N	16	8
33	SN74LS151N	16	8
34	SN74LS151N	16	8
35	SN74LS11N	14	7
36	SN74LS11N	14	7
37	SN7407N	14	7
38	SN74LS02N	14	7
39	SN74LS00N	14	7
40	SN74LS259AN	16	8
41	SN74LS05N	14	7
42	SN74LS123NS	16	8

SYS SW-1 (NTSC,PS,PM)

BOARD NO. : 1-588-366-15
BVH-1100A(J) : ■ 20001 –
BVH-1100A(U/C) : ■ 20001 –
BVH-1100APS : ■ 20001 –
BVH-1100APM : ■ 20001 –

SYS SW-2A SYS SW-2A

SYS SW-2A BOARD — *COMPONENT SIDE* —

FORMER
NTSC; # 20001 – 20299
PS ; # 20001 – 20199

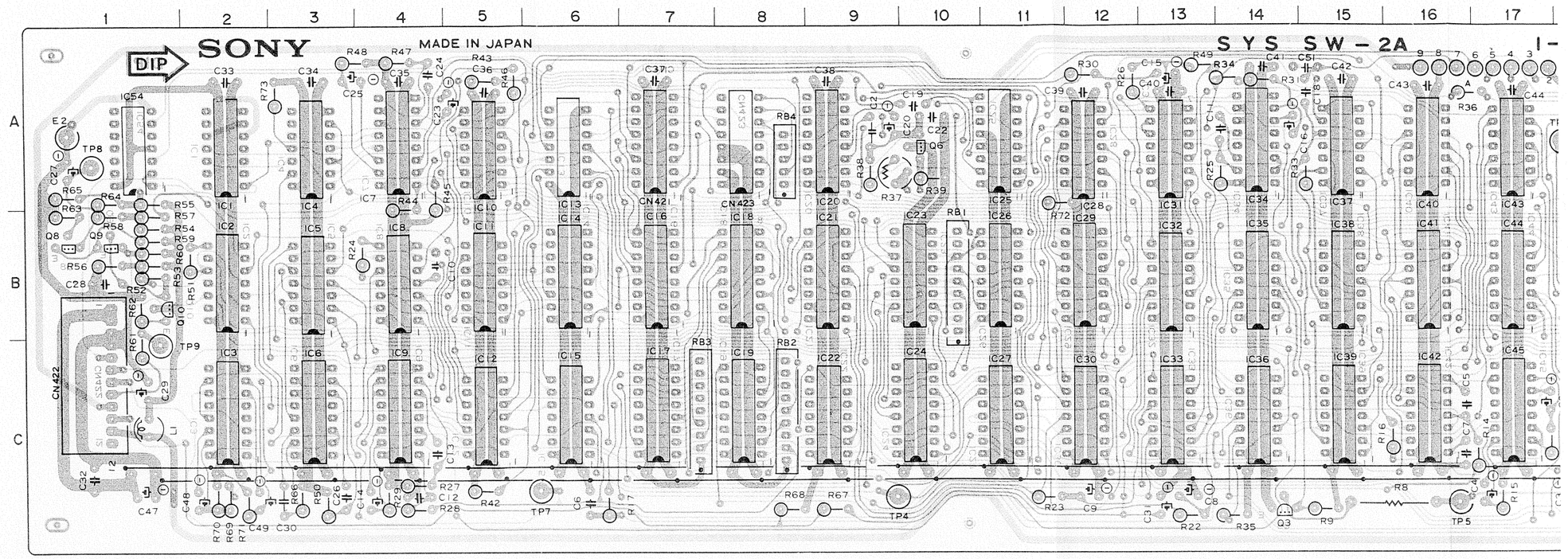

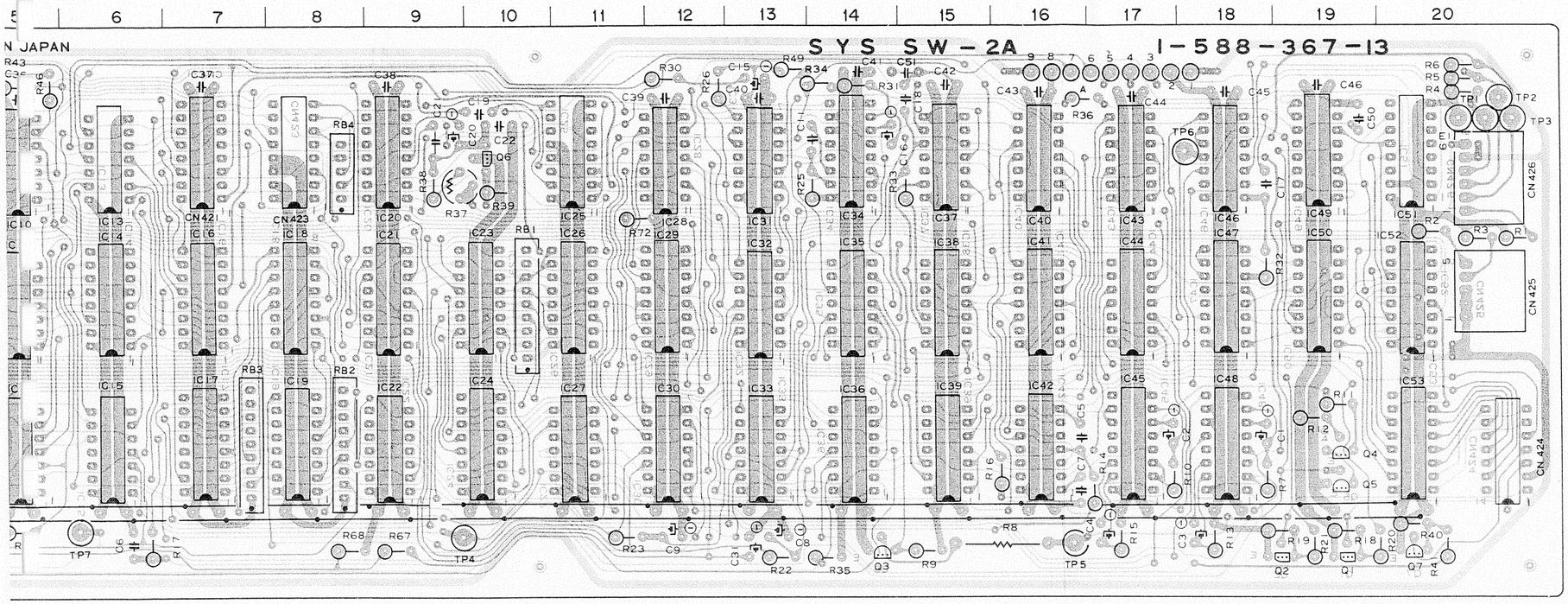

BVH-1100A (NTSC)
BVH-1100APS
BVH-1100APM
SYS SW-2A BOARD
1-588-367-13

FORMER
NTSC; # 20001 – 20299
PS ; # 20001 – 20199

E1	A - 20	Q1	C - 19	IC41	B - 16
E2	A - 2	Q2	C - 19	IC42	C - 16
		Q3	C - 14	IC43	A - 17
IC1	A - 2	Q4	C - 19	IC44	B - 17
IC2	B - 2	Q5	C - 19	IC45	C - 17
IC3	C - 2	Q6	A - 10	IC46	A - 18
IC4	A - 3	Q7	C - 19	IC47	B - 18
IC5	B - 3	Q8	B - 1	IC48	C - 18
IC6	C - 3	Q9	B - 1	IC49	A - 19
IC7	A - 4	Q10	B - 1	IC50	B - 19
IC8	B - 4			IC51	A - 20
IC9	C - 4	R37	A - 9	IC52	B - 20
IC10	A - 5			IC53	C - 20
IC11	B - 5	TP1	A - 20	IC54	A - 1
IC12	C - 5	TP2	A - 20		
IC13	A - 6	TP3	A - 20		
IC14	B - 6	TP4	C - 9		
IC15	C - 6	TP5	C - 16		
IC16	B - 7	TP6	A - 18		
IC17	C - 7	TP7	C - 6		
IC18	B - 8	TP8	A - 1		
IC19	C - 8	TP9	C - 1		
IC20	A - 9				
IC21	B - 9				
IC22	C - 9				
IC23	B - 10				
IC24	C - 10				
IC25	A - 11				
IC26	B - 11				
IC27	C - 11				
IC28	A - 12				
IC29	B - 12				
IC30	C - 12				
IC31	A - 13				
IC32	B - 13				
IC33	C - 13				
IC34	A - 14				
IC35	B - 14				
IC36	C - 14				
IC37	A - 15				
IC38	B - 15				
IC39	C - 15				
IC40	A - 16				

3S BOARD
— COMPONENT SIDE —

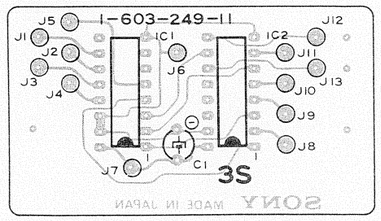

SYS SW-2A BOARD
System Control

FORMER
NTSC; # 20001 – 20299
PS ; # 20001 – 20199

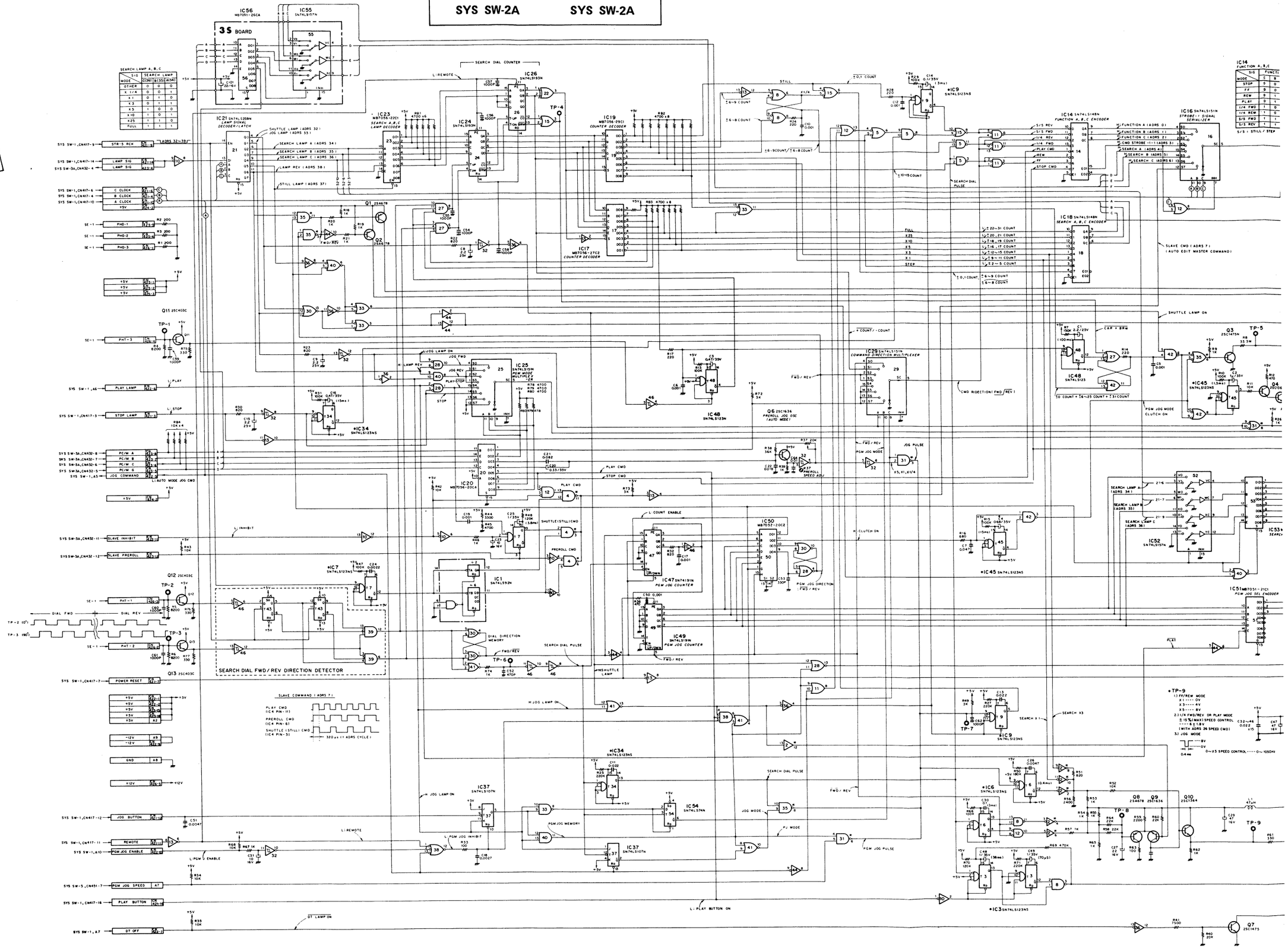

21-171 (5/7)

21-171 (6/7)

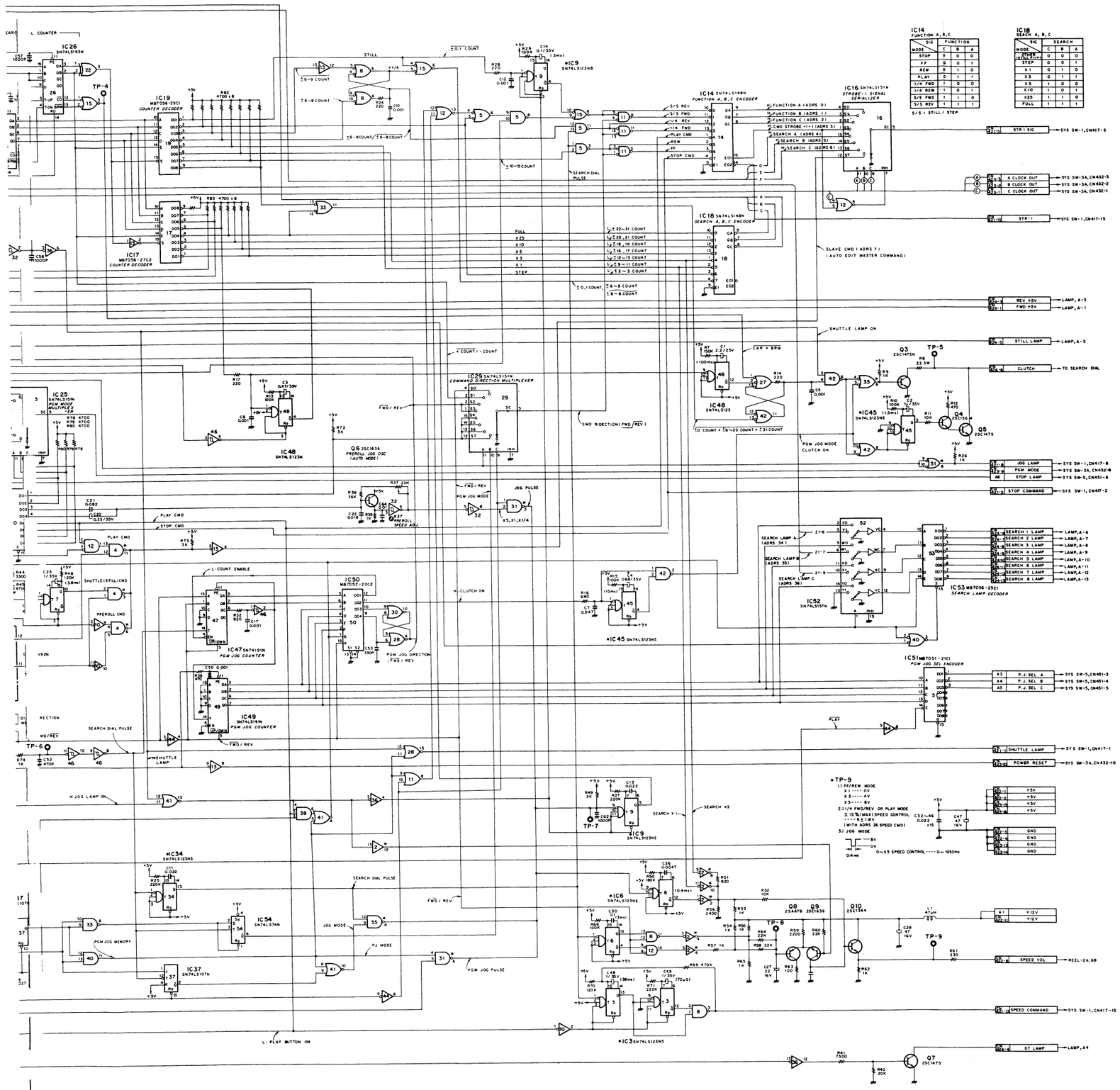

SYSTEM CLOCK

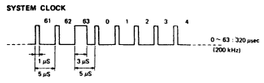

SYSTEM SIGNAL (DATA ADDRESS)

ADDRESS	COMMAND	
0	FUNCTION A	COMMAND STROBE 1-2
1	FUNCTION B	
2	FUNCTION C	
3	COMMAND STROBE 1-1	
4	SEARCH A	
5	SEARCH B	
6	SEARCH C	
7	(AUTO MODE MASTER CMDS)	
8	EDIT BUTTON	COMMAND STROBE 2
9	ASSEMBLE PRESET BUTTON	
10	VIDEO PRESET BUTTON	
11	AUDIO CH-1 PRESET BUTTON	
12	AUDIO CH-2 PRESET BUTTON	
13	AUDIO CH-3 REC BUTTON	
14	REMOTE E-E BUTTON	
15	STANDBY BUTTON	
16	SPARE-2 (USER-BIT SEL-R)	COMMAND STROBE 3
17	REC BUTTON (REC SAFETY)	
18	AUDIO CH-3 400 Hz BUTTON	
19	TIMER RESET SW	
20	SHUTTLE BUTTON	COMMAND STROBE 1-2
21	JOG BUTTON	
22	(AUTO MODE MEMORY)	
23	REMOTE GO	
24	ZERO MEMORY-1 ON/OFF SW	
25	ZERO MEMORY-2 ON/OFF SW	
26	SPEED COMMAND	
27	REC SAFETY	
28	EXT SYNC/INPUT VIDEO SELECT	
29	COMMAND STROBE 3	
30	COMMAND STROBE 2	
31	COMMAND STROBE 1-2	
	STATUS (MODE)	
32	SHUTTLE LAMP	
33	JOG LAMP	
34	SEARCH LAMP A	
35	SEARCH LAMP B	
36	SEARCH LAMP C	
37	STILL LAMP	
38	REVERSE LAMP	
39	SPARE	
40	EDIT LAMP	
41	ASSEMBLE LAMP	
42	VIDEO LAMP	
43	AUDIO CH-1 LAMP	
44	AUDIO CH-2 LAMP	
45	AUDIO CH-3 LAMP	
46	AUDIO CH 3 400 Hz LAMP	
47	REC LAMP	
48	STOP LAMP	
49	PLAY LAMP	
50	STANDBY LAMP	
51	COUNTER REV (TAPE DIRECTION)	
52	AUTO MODE SLAVE READY	
53	REMOTE E-E LAMP	
54	(SPARE-REC INHIBIT)	
55	TAPE UNTHREAD	
56	SPARE	
57	DISPLAY SELECT	
58	CAPSTAN LOCK LAMP	
59	DRUM LOCK LAMP	
60	ZERO STOP LAMP	
61	VH LOCK LAMP	
62	REMOTE	
63	(NO USED INDEX)	

IC14 FUNCTION A, B, C

SIG	FUNCTION		
MODE	C	B	A
STOP	0	0	0
FF	0	0	1
REW	0	1	0
PLAY	0	1	1
1/4 FWD	1	0	0
1/4 REW	1	0	1
S/S FWD	1	1	0
S/S REV	1	1	1

S/S : STILL / STEP

IC18 SEACH A, B, C

SIG	SEARCH		
MODE (OTHER THAN STEP)	C	B	A
STEP	0	0	0
X1	0	1	0
X3	0	1	1
X5	1	0	0
X10	1	0	1
X25	1	1	0
FULL	1	1	1

IC17
MB7056-27C2
PROGRAMMED DATA

WORD (ADDRESS)	DATA OUTPUTS (IN HEXA DECIMAL)
0 – 15	7E, 7E, 7D, 7D, 7B, 7B, 77, 67, 67, 67, 47, 47, 47, 47, 47, 47,
16 – 31	27, 27, 27, 27, 27, 27, 67, 67, 67, 77, 7B, 7B, 7D, 7D, 7E, 7E,

IC19
MB7056-29C1
PROGRAMMED DATA

WORD (ADDRESS)	DATA OUTPUTS (IN HEXA DECIMAL)
0 – 15	3E, BE, BD, BD, BD, BD, B3, B3, B3, B3, AB, EF, EF, DF, DF, DF, DF,
16 – 31	DF, DF, DF, DF, EF, EF, AB, B3, B3, B3, B3, BD, BD, BD, BD, BD, BE, 3E,

IC20
MB7056-20CA
PROGRAMMED DATA

WORD (ADDRESS)	DATA OUTPUTS (IN HEXA DECIMAL)
0 – 15	FF, FF, FF, 3C, FF, 7D, FF, 7D, FF, 3C, FF, 3B, FF, 9F, FF, BF,
16 – 31	FF, 3C, FF, 3C, FF, 79, FF, 75, FF, 7D, FF, 7D, FF, AD, FF, BD,

IC23
MB7056-22C1
PROGRAMMED DATA

WORD (ADDRESS)	DATA OUTPUTS (IN HEXA DECIMAL)
0 – 15	03, 07, 0B, 0F, 13, 13, 15, 17, FC, F8, F4, F0, EE, EC, EA, E8,
16 – 31	00, 00, 00, 00, 00, 00, 00, 00, 00, 00, 00, 00, 00, 00, 00, 00,

IC50
MB7052-20C2
PROGRAMMED DATA

WORD (ADDRESS)	DATA OUTPUTS (IN HEXA DECIMAL)
0 – 15	0, 0, 2, 2, 8, 8, A, 8, 8, 8, A, 8, 8, 8, A, 8,
16 – 31	8, 8, A, 8, 8, 8, A, 8, 8, 8, A, A, B, B, B, B,
32 – 47	B, B, B, B, B, B, B, B, 7, 7, 7, 7, 7, 7, 7, 7,
48 – 63	6, 6, 6, 6, 6, 6, 6, 6, 4, 4, 4, 6, 4, 4, 4, 6,
64 – 79	9, 9, 9, 9, 9, 9, 9, 9, 9, 9, 9, 9, 9, 9, 9, 9,
80 – 95	9, 9, 9, 9, 9, 9, 9, 9, 9, 9, 9, 9, 9, 9, 9, 9,
96 – 111	9, 9, 9, 9, 9, 9, 9, 9, 9, 9, 9, 9, 9, 9, 9, 9,
112 – 127	9, 9, 9, 9, 9, 9, 9, 9, 9, 9, 9, 9, 9, 9, 9, 9,
128 – 143	0, 2, 2, 0, 8, A, 8, 8, 8, A, 8, 8, 8, A, 8, 8,
144 – 159	8, A, 8, 8, 8, A, 8, 8, 8, A, A, A, A, A, A, A,
160 – 175	B, B, B, B, B, B, B, B, 7, 7, 7, 7, 7, 7, 7, 7,
176 – 191	7, 7, 7, 7, 6, 6, 4, 4, 4, 6, 4, 4, 4, 6, 4, 4,
192 – 207	9, 9, 9, 9, 9, 9, 9, 9, 9, 9, 9, 9, 9, 9, 9, 9,
208 – 223	9, 9, 9, 9, 9, 9, 9, 9, 9, 9, 9, 9, 9, 9, 9, 9,
224 – 239	9, 9, 9, 9, 9, 9, 9, 9, 9, 9, 9, 9, 9, 9, 9, 9,
240 – 255	9, 9, 9, 9, 9, 9, 9, 9, 9, 9, 9, 9, 9, 9, 9, 9,

IC51
MB7051-21C1
PROGRAMMED DATA

WORD (ADDRESS)	DATA OUTPUTS (IN HEXA DECIMAL)
0 – 15	00, 01, 02, 03, 04, 05, 06, 06, 06, 06, 03, 03, 03, 03, 02, 01,
16 – 31	05, 05, 05, 05, 05, 05, 05, 05, 05, 05, 05, 05, 05, 05, 05, 05,

IC53
MB7056-25C1
PROGRAMMED DATA

WORD (ADDRESS)	DATA OUTPUTS (IN HEXA DECIMAL)
0 – 15	FF, FE, FC, F8, F0, E0, C0, C0, C0, C0, F8, F8, F8, F8, FC, FE,
16 – 31	FE, FC, F8, F0, E0, C0, 80, 00, 00, 00, 00, 00, 00, 00, 00, 00,

IC101
MB7051-26CA
PROGRAMMED DATA

WORD (ADDRESS)	DATA OUTPUTS (IN HEXA DECIMAL)
0 – 15	10, 0F, 0E, 0D, 00, 00, 0F, 0E, 0D, 00, 00, 00, 00, 10, 10, 10,
16 – 31	00, 00, 00, 00, 00, 00, 00, 00, 00, 00, 00, 00, 00, 00, 00, 00,

***CHANGED**

	UP TO # 20099	# 20101 & UP
IC3, 6, 7, 9 34, 45	SN74LS123N	SN74LS123NS

***CHANGED**

	NTSC: UP TO #20199 PS: UP TO #20099	NTSC: #20201 TO 20299 PS: #20101 TO 20199
C4	0.47 35V	0.68 35V

REF. NO.		TYPE	PIN NO. +5V	PIN NO. GND
IC	1	SN74LS92N	5	10
	2	SN74077N	14	7
	3	SN74LS123NS	16	8
	4	SN74LS03N	14	7
	5	SN74LS00N	14	7
	6	SN74LS123NS	16	8
	7	SN74LS123NS	16	8
	8	SN74LS00N	14	7
	9	SN74LS123NS	16	8
	10	SN74LS04N	14	7
	11	SN74LS32N	14	7
	12	SN74LS02N	14	7
	13	SN74LS04N	14	7
	14	SN74LS148N	16	8
	15	SN74LS08N	14	7
	16	SN74LS151N	16	8
	17	MB7056-27C2	16	8
	18	SN74LS148N	16	8
	19	MB7056-29C1	16	8
	20	MB7056-20CA	16	8
	21	SN74LS259AN	16	8
	22	SN74LS86N	14	7
	23	MB7056-22C1	16	8
	24	SN74LS193N	16	8
	25	SN74LS151N	16	8
	26	SN74LS193N	16	8
	27	SN74LS10N	14	7
	28	SN74LS02N	14	7
	29	SN74LS151N	16	8
	30	SN74LS02N	14	7
	31	SN74LS03N	14	7
	32	SN74LS14N	14	7
	33	SN74LS00N	14	7
	34	SN74LS123NS	16	8
	35	SN74LS03N	14	7
	36	SN74LS04N	14	7
	37	SN74LS107N	14	7
	38	SN74LS11N	14	7
	39	SN74LS11N	14	7
	40	SN74LS08N	14	7
	41	SN74LS02N	14	7
	42	SN74LS00N	14	7
	43	SN74LS74N	14	7
	44	SN74LS04N	14	7
	45	SN74LS123NS	16	8
	46	SN74LS14N	14	7
	47	SN74191N	16	8
	48	SN74LS123N	16	8
	49	SN74LS191N	16	8
	50	MB7052-20C2	16	8
	51	MB7051-21C1	16	8
	52	SN74LS157N	16	8
	53	MB7056-25C1	16	8
	54	SN74LS74N	14	7
	55	SN74LS157N	16	8
	56	MB7051-26CA	16	8

FORMER
NTSC; # 20001 – 20299
PS ; # 20001 – 20199

SYS SW-2A(NTSC, PS)

BOARD NO. 1-588-367-13
BVH-1100A(NTSC) UP TO # 20299
BVH-1100APS UP TO # 20199

SYS SW-2A SYS SW-2A

SYS SW-2A BOARD — *COMPONENT SIDE* —

NEW
NTSC; # 20301 –
PS ; # 20201 –

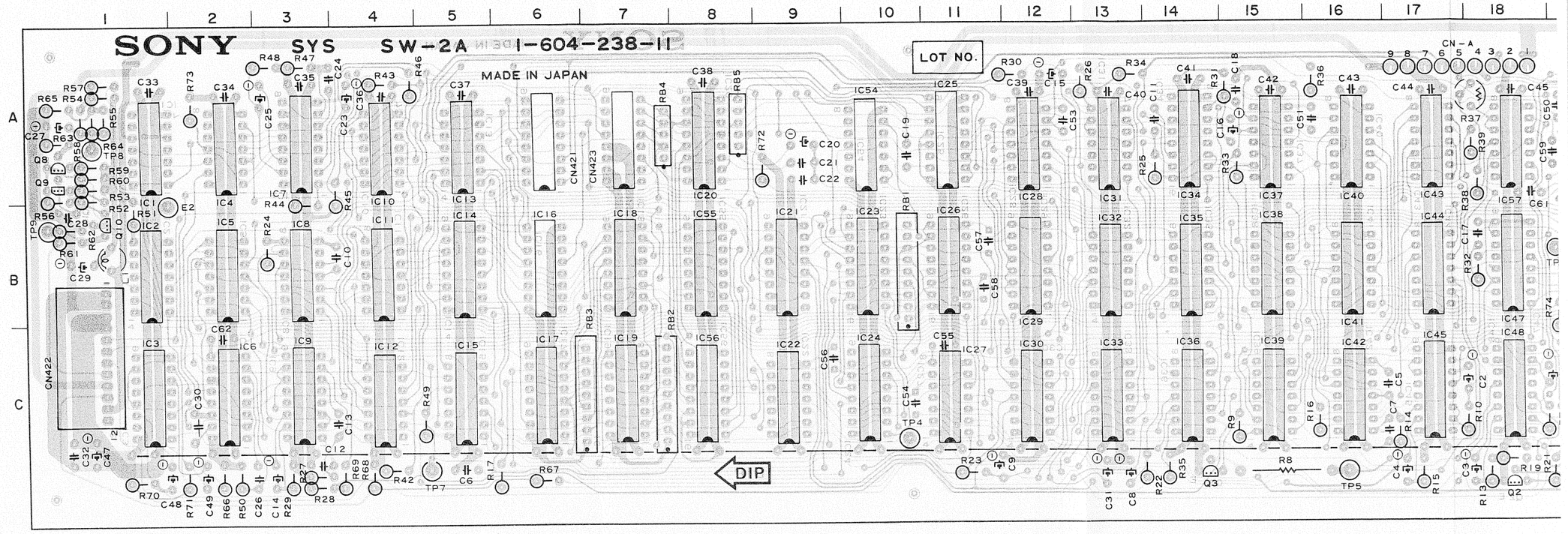

SYS SW-2A SYS SW-2A

NEW
NTSC; # 20301 –
PS ; # 20201 –

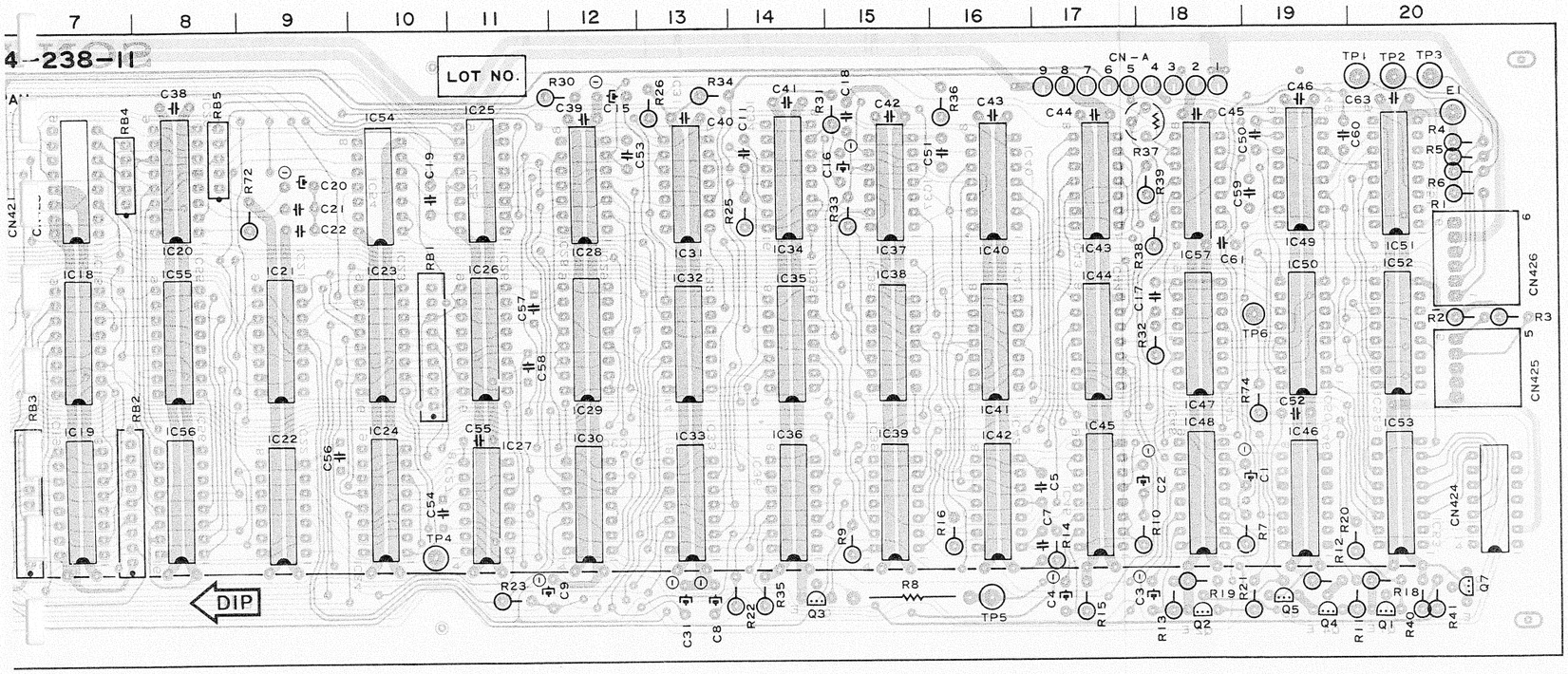

BVH-1100A (NTSC)
BVH-1100APS
BVH-1100APM
SYS SW-2A BOARD
1-604-238-11

E1	A - 20	IC39	C - 15		
E2	B - 2	IC40	A - 16		
		IC41	B - 16		
IC1	A - 1	IC42	C - 16		
IC2	B - 1	IC43	A - 17		
IC3	C - 1	IC44	B - 17		
IC4	A - 2	IC45	C - 17		
IC5	B - 2	IC46	C - 19		
IC6	C - 2	IC47	B - 18		
IC7	A - 3	IC48	C - 18		
IC8	B - 3	IC49	A - 19		
IC9	C - 3	IC50	B - 19		
IC10	A - 4	IC51	A - 20		
IC11	B - 4	IC52	B - 20		
IC12	C - 4	IC53	C - 20		
IC13	A - 5	IC54	A - 10		
IC14	B - 5	IC55	B - 8		
IC15	C - 5	IC56	C - 8		
IC16	B - 6	IC57	A - 18		
IC17	C - 6				
IC18	B - 7	Q1	C - 20		
IC19	C - 7	Q2	C - 18		
IC20	A - 8	Q3	C - 14		
IC21	B - 9	Q4	C - 19		
IC22	C - 9	Q5	C - 19		
IC23	B - 10	Q7	C - 20		
IC24	C - 10	Q8	A - 1		
IC25	A - 11	Q9	A - 1		
IC26	B - 11	Q10	B - 10		
IC27	C - 11				
IC28	A - 12	R37	A - 18		
IC29	B - 12				
IC30	C - 12	TP1	A - 20		
IC31	A - 13	TP2	A - 20		
IC32	B - 13	TP3	A - 20		
IC33	C - 13	TP4	C - 10		
IC34	A - 14	TP5	C - 16		
IC35	B - 14	TP6	B - 19		
IC36	C - 14	TP7	C - 5		
IC37	A - 15	TP8	A - 1		
IC38	B - 15	TP9	B - 1		

SYS SW-2A BOARD
System Control

NEW
NTSC; # 20301 –
PS ; # 20201 –

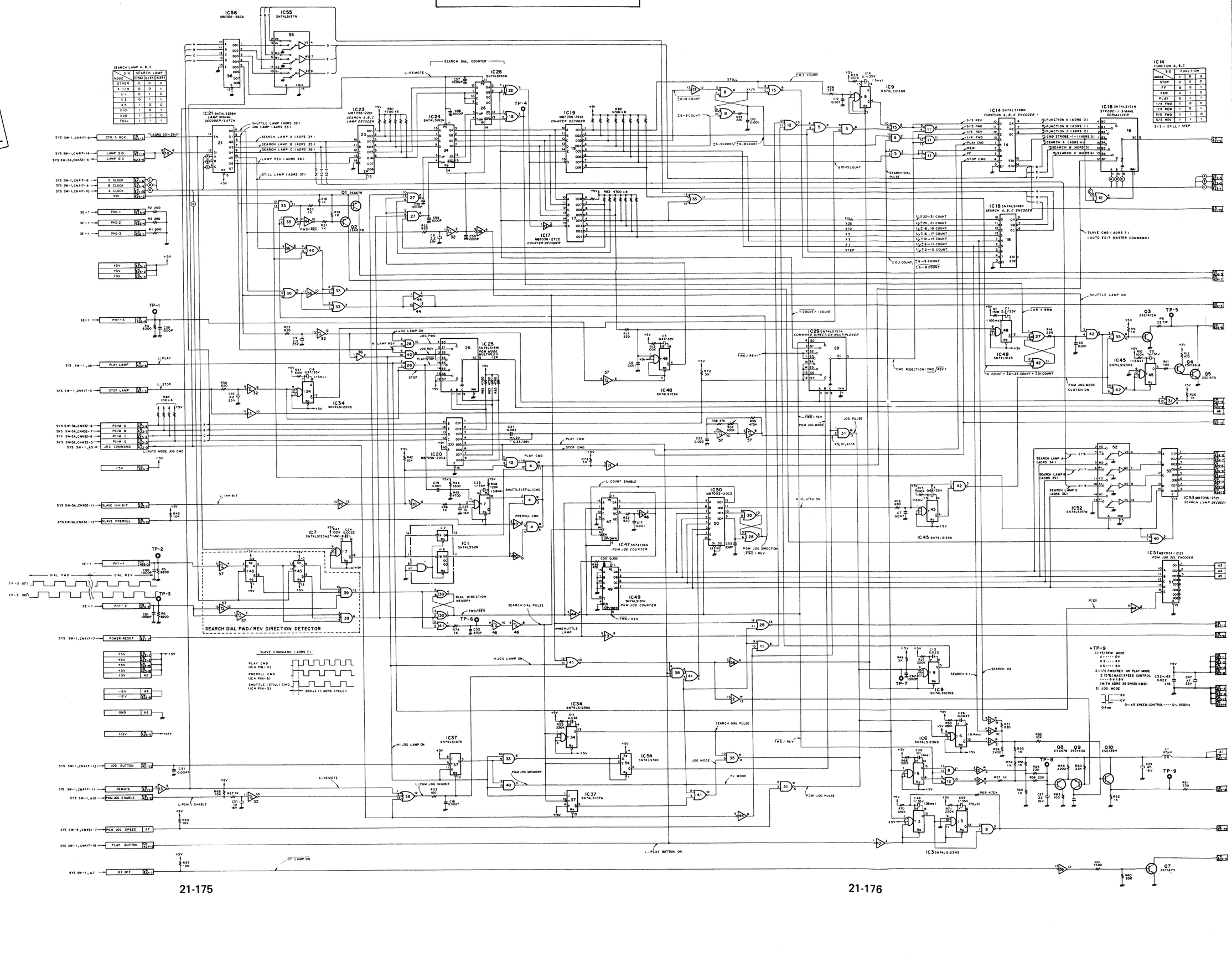

SEARCH LAMP A, B, C		
SIG	SEARCH LAMP	
MODE	(CN417)	(CN434)
OTHER	0	0
X 1/4	0	0
X 1	0	1
X 3	0	1
X 5	1	0
X 10	1	0
X 25	1	1
FULL	1	1

IC14 FUNCTION A,B,C		
SIG	FUNCTION	
MODE	C	B
STOP	0	0
FF	0	0
REW	0	1
PLAY	0	1
1/4 FWD	1	0
1/4 REW	1	0
S/S FWD	1	1
S/S REV	1	1

S/S = STILL / STEP

SYS SW-2A

NEW
NTSC; # 20301 –
PS ; # 20201 –

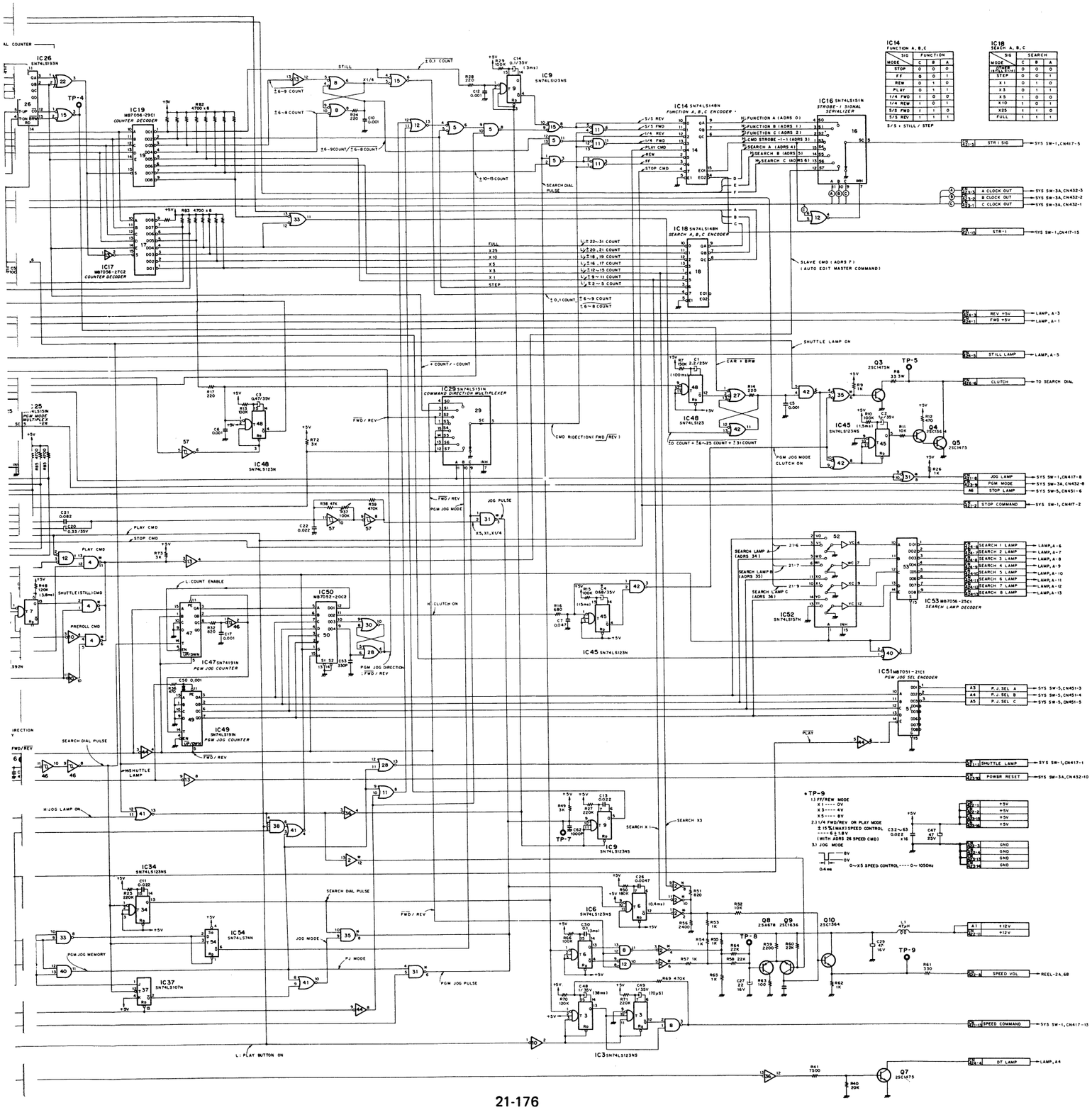

SYSTEM CLOCK

SYSTEM SIGNAL (DATA ADDRESS)

ADDRESS	COMMAND	
0	FUNCTION A	COMMAND STROBE 1-2
1	FUNCTION B	
2	FUNCTION C	
3	COMMAND STROBE 1-1	
4	SEARCH A	
5	SEARCH B	
6	SEARCH C	
7	(AUTO MODE MASTER CMDS)	
8	EDIT BUTTON	COMMAND STROBE 2
9	ASSEMBLE PRESET BUTTON	
10	VIDEO PRESET BUTTON	
11	AUDIO CH-1 PRESET BUTTON	
12	AUDIO CH-2 PRESET BUTTON	
13	AUDIO CH-3 REC BUTTON	
14	REMOTE E-E BUTTON	
15	STANDBY BUTTON	
16	SPARE-2 (USER-BIT SEL-R)	
17	REC BUTTON (REC SAFETY)	COMMAND STROBE 3
18	AUDIO CH-3 400 Hz BUTTON	
19	TIMER RESET SW	
20	SHUTTLE BUTTON	COMMAND STROBE 1-2
21	JOG BUTTON	
22	(AUTO MODE MEMORY)	
23	REMOTE GO	
24	ZERO MEMORY-1 ON/OFF SW	
25	ZERO MEMORY-2 ON/OFF SW	
26	SPEED COMMAND	
27	REC SAFETY	
28	EXT SYNC/INPUT VIDEO SELECT	
29	COMMAND STROBE 3	
30	COMMAND STROBE 2	
31	COMMAND STROBE 1-2	
	STATUS (MODE)	
32	SHUTTLE LAMP	
33	JOG LAMP	
34	SEARCH LAMP A	
35	SEARCH LAMP B	
36	SEARCH LAMP C	
37	STILL LAMP	
38	REVERSE LAMP	
39	SPARE	
40	EDIT LAMP	
41	ASSEMBLE LAMP	
42	VIDEO LAMP	
43	AUDIO CH-1 LAMP	
44	AUDIO CH-2 LAMP	
45	AUDIO CH-3 LAMP	
46	AUDIO CH-3 400 Hz LAMP	
47	REC LAMP	
48	STOP LAMP	
49	PLAY LAMP	
50	STANDBY LAMP	
51	COUNTER REV (TAPE DIRECTION)	
52	AUTO MODE SLAVE READY	
53	REMOTE E-E LAMP	
54	(SPARE-REC INHIBIT)	
55	TAPE UNTHREAD	
56	SPARE	
57	DISPLAY SELECT	
58	CAPSTAN LOCK LAMP	
59	DRUM LOCK LAMP	
60	ZERO STOP LAMP	
61	VH LOCK LAMP	
62	REMOTE	
63	(NO USED : INDEX)	

IC14 FUNCTION A, B, C

SIG / MODE	FUNCTION C	B	A
STOP	0	0	0
FF	0	0	1
REW	0	1	0
PLAY	0	1	1
1/4 FWD	1	0	0
1/4 REW	1	0	1
S/S FWD	1	1	0
S/S REV	1	1	1

S/S + STILL / STEP

IC18 SEARCH A, B, C

SIG / MODE (ADRS 4,5,6)	SEARCH C	B	A
STEP	0	0	0
X 1	0	0	1
X 3	0	1	1
X 5	1	0	0
X 10	1	0	1
X 25	1	1	0
FULL	1	1	1

IC17
MB7056-27C2
PROGRAMMED DATA

WORD (ADDRESS)	DATA OUTPUTS (IN HEXA DECIMAL)
0 ~ 15	7E. 7E. 7D. 7D. 7B. 7B. 77. 67. 67. 67. 47. 47. 47. 47. 47. 47.
16 ~ 31	27. 27. 27. 27. 27. 27. 27. 67. 67. 67. 77. 7B. 7B. 7D. 7D. 7E. 7E.

IC19
MB7056-28C1
PROGRAMMED DATA

WORD (ADDRESS)	DATA OUTPUTS (IN HEXA DECIMAL)
0 ~ 15	3E. BE. BD. BD. BD. BD. B3. B3. B3. B3. AB. EF. EF. DF. DF. DF. DF.
16 ~ 31	DF. DF. DF. DF. EF. EF. AB. B3. B3. B3. B3. BD. BD. BD. BD. BE. 3E.

IC20
MB7056-20CA
PROGRAMMED DATA

WORD (ADDRESS)	DATA OUTPUTS (IN HEXA DECIMAL)
0 ~ 15	FF. FF. FF. 3C. FF. 7D. FF. 7D. FF. 3C. FF. 38. FF. 9F. FF. BF.
16 ~ 31	FF. 3C. FF. 3C. FF. 79. FF. 75. FF. 7D. FF. 7D. FF. AD. FF. BD.

IC23
MB7056-22C1
PROGRAMMED DATA

WORD (ADDRESS)	DATA OUTPUTS (IN HEXA DECIMAL)
0 ~ 15	03. 07. 0H. 0F. 11. 13. 15. 17. FC. F8. F4. F0. EE. EC. EA. E8.
16 ~ 31	00. 00. 00. 00. 00. 00. 00. 00. 00. 00. 00. 00. 00. 00. 00. 00.

IC50
MB7052-20C2
PROGRAMMED DATA

WORD (ADDRESS)	DATA OUTPUTS (IN HEXADECIMAL)
0 ~ 15	0. 0. 2. 2. 8. 8. A. 8. 8. A. 8. 8. A. 8. 8. 8. A.
16 ~ 31	8. 8. A. 8. 8. 8. 8. A. 8. 8. A. A. B. B. B. B.
32 ~ 47	B. B. B. B. B. B. B. B. 7. 7. 7. 7. 7. 7. 7. 7.
48 ~ 63	6. 6. 6. 6. 6. 6. 6. 6. 4. 4. 6. 4. 4. 6. 6. 4.
64 ~ 79	9. 9. 9. 9. 9. 9. 9. 9. 9. 9. 9. 9. 9. 9. 9. 9.
80 ~ 95	9. 9. 9. 9. 9. 9. 9. 9. 9. 9. 9. 9. 9. 9. 9. 9.
96 ~ 111	9. 9. 9. 9. 9. 9. 9. 9. 9. 9. 9. 9. 9. 9. 9. 9.
112 ~ 127	9. 9. 9. 9. 9. 9. 9. 9. 9. 9. 9. 9. 9. 9. 9. 9.
128 ~ 143	0. 2. 2. 0. 8. A. 8. 8. 8. A. 8. 8. 8. A. 8. 8.
144 ~ 159	8. A. 8. 8. 8. A. 8. 8. 8. A. A. A. A. A. A. A.
160 ~ 175	B. B. B. B. B. B. B. B. 7. 7. 7. 7. 7. 7. 7. 7.
176 ~ 191	7. 7. 7. 7. 6. 6. 4. 4. 6. 6. 4. 4. 6. 6. 4. 4.
192 ~ 207	9. 9. 9. 9. 9. 9. 9. 9. 9. 9. 9. 9. 9. 9. 9. 9.
208 ~ 223	9. 9. 9. 9. 9. 9. 9. 9. 9. 9. 9. 9. 9. 9. 9. 9.
224 ~ 239	9. 9. 9. 9. 9. 9. 9. 9. 9. 9. 9. 9. 9. 9. 9. 9.
240 ~ 256	9. 9. 9. 9. 9. 9. 9. 9. 9. 9. 9. 9. 9. 9. 9. 9.

IC51
MB7051-21C1
PROGRAMMED DATA

WORD (ADDRESS)	DATA OUTPUTS (IN HEXA DECIMAL)
0 ~ 15	00. 01. 02. 03. 04. 05. 06. 06. 08. 06. 03. 03. 03. 02. 01.
16 ~ 31	05. 05. 05. 05. 05. 05. 05. 05. 05. 05. 05. 05. 05. 05. 05.

IC53
MB7056-25C1
PROGRAMMED DATA

WORD (ADDRESS)	DATA OUTPUTS (IN HEXA DECIMAL)
0 ~ 15	FF. FE. FC. F8. F0. E0. C0. C0. C0. C0. F8. F8. F8. F8. FC. FE.
16 ~ 31	FE. FC. F8. F0. E0. C0. 80. 00. 00. 00. 00. 00. 00. 00. 00. 00.

IC101
MB7051-28CA
PROGRAMMED DATA

WORD (ADDRESS)	DATA OUTPUTS (IN HEXA DECIMAL)
0 ~ 15	1B. 0F. 0E. 0D. 00. 00. 0F. 0E. 0D. 00. 00. 00. 1B. 1B. 1B. 1B.
16 ~ 31	00. 00. 00. 00. 00. 00. 00. 00. 00. 00. 00. 00. 00. 00. 00. 00.

REF. NO.		TYPE	PIN NO. +5V	PIN NO. GND
IC	1	SN74LS92N	5	10
	2	SN7407N	14	7
	3	SN74LS123NS	16	8
	4	SN74LS03N	14	7
	5	SN74LS00N	14	7
	6	SN74LS123NS	16	8
	7	SN74LS123NS	16	8
	8	SN74LS00N	14	7
	9	SN74LS123NS	16	8
	10	SN74LS04N	14	7
	11	SN74LS32N	14	7
	12	SN74LS02N	14	7
	13	SN74LS04N	14	7
	14	SN74LS148N	16	8
	15	SN74LS08N	14	7
	16	SN74LS151N	16	8
	17	MB7056-27C2	16	8
	18	SN74LS148N	16	8
	19	MB7056-29C1	16	8
	20	MB7056-20CA	16	8
	21	SN74LS259AN	16	8
	22	SN74LS86N	14	7
	23	MB7056-22C1	16	8
	24	SN74LS193N	16	8
	25	SN74LS151N	16	8
	26	SN74LS193N	16	8
	27	SN74LS10N	14	7
	28	SN74LS02N	14	7
	29	SN74LS151N	16	8
	30	SN74LS02N	14	7
	31	SN74LS03N	14	7
	32	SN74LS14N	14	7
	33	SN74LS00N	14	7
	34	SN74LS123NS	16	8
	35	SN74LS03N	14	7
	36	SN74LS04N	14	7
	37	SN74LS107N	14	7
	38	SN74LS11N	14	7
	39	SN74LS11N	14	7
	40	SN74LS08N	14	7
	41	SN74LS02N	14	7
	42	SN74LS00N	14	7
	43	SN74LS74N	14	7
	44	SN74LS04N	14	7
	45	SN74LS123NS	16	8
	46	SN74LS14N	14	7
	47	SN7419IN	16	8
	48	SN74LS123N	16	8
	49	SN74LS191N	16	8
	50	MB7052-20C2	16	8
	51	MB7051-21C1	16	8
	52	SN74LS157N	16	8
	53	MB7056-25C1	16	8
	54	SN74LS74N	14	7
	55	SN74LS157N	16	8
	56	MB7051-26CA	16	8
	57	MC14584BCP	14	7

SYS SW-2A (NTSC, PS, PM)

BOARD NO. : 1-604-238-11
BVH-1100A (NTSC) : # 20301 AND UP
BVH-1100APS : # 20201 AND UP
BVH-1100APM : # 20001 AND UP

SYS SW-3A

SYS SW-3A BOARD — *COMPONENT SIDE* —

FORMER
NTSC; # 20001 – 20299
PS ; # 20001 – 20199

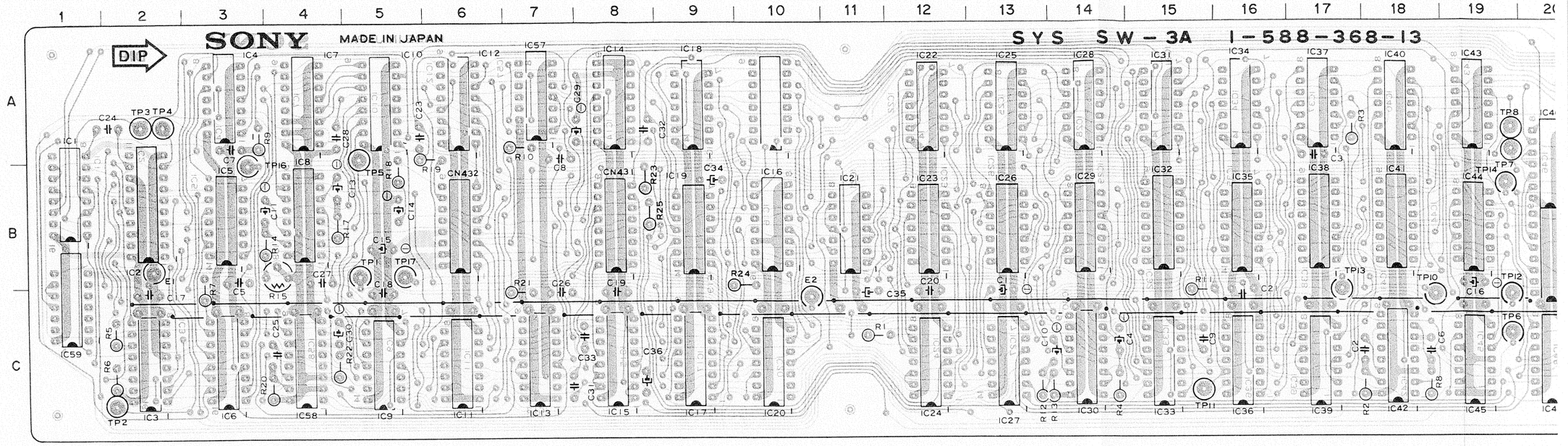

SYS SW-3A BOARD — *COMPONENT SIDE*

NEW
NTSC; # 20301 –
PS ; # 20201 –

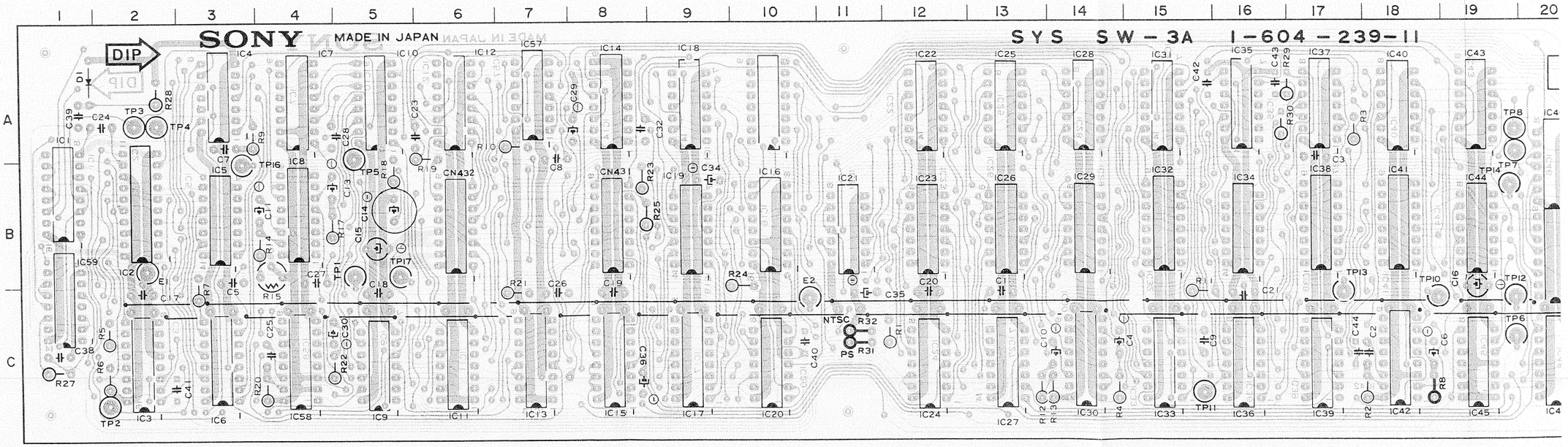

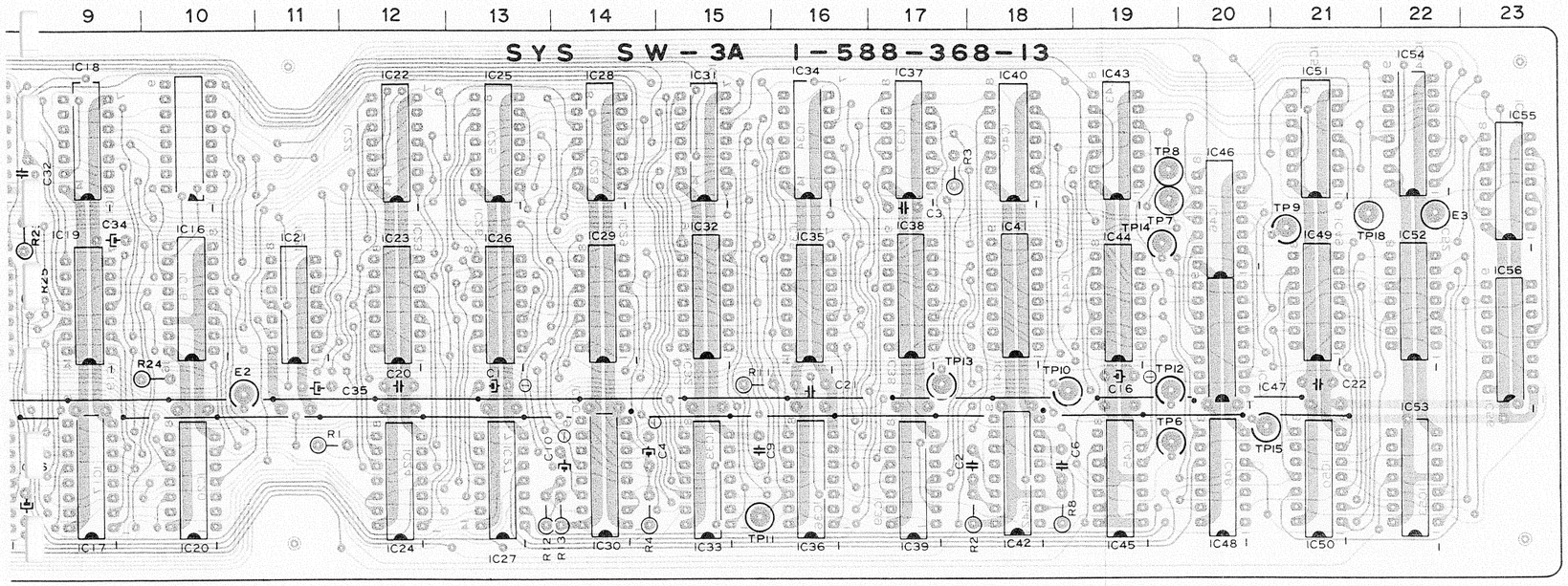

BVH-1100A (NTSC)
BVH-1100APS
BVH-1100APM
SYS SW-3A BOARD
1-588-368-13

E1	B - 2	IC39	C - 17		
E2	C - 10	IC40	A - 18		
E3	A - 22	IC41	B - 18		
		IC42	C - 18		
IC1	B - 1	IC43	A - 19		
IC2	B - 2	IC44	B - 19		
IC3	C - 2	IC45	C - 19		
IC4	A - 3	IC46	A - 20		
IC5	B - 3	IC47	B - 20		
IC6	C - 3	IC48	C - 20		
IC7	A - 4	IC49	B - 21		
IC8	B - 4	IC50	C - 21		
IC9	C - 5	IC51	A - 21		
IC10	A - 5	IC52	B - 22		
IC11	C - 6	IC53	C - 22		
IC12	A - 6	IC54	A - 22		
IC13	C - 7	IC55	A - 23		
IC14	A - 8	IC56	B - 23		
IC15	C - 8	IC57	A - 7		
IC16	B - 10	IC58	C - 4		
IC17	C - 9	IC59	C - 1		
IC18	A - 9				
IC19	B - 9	R15	B - 4		
IC20	C - 10				
IC21	B - 11	TP1	B - 5		
IC22	A - 12	TP2	C - 1		
IC23	B - 12	TP3	A - 2		
IC24	C - 12	TP4	A - 2		
IC25	A - 13	TP5	A - 5		
IC26	B - 13	TP6	C - 19		
IC27	C - 13	TP7	A - 19		
IC28	A - 14	TP8	A - 19		
IC29	B - 14	TP9	B - 21		
IC30	C - 14	TP10	C - 18		
IC31	A - 15	TP11	C - 15		
IC32	B - 15	TP12	C - 19		
IC33	C - 15	TP13	C - 17		
IC34	B - 16	TP14	B - 19		
IC35	A - 16	TP15	C - 20		
IC36	C - 16	TP16	B - 3		
IC37	A - 17	TP17	B - 5		
IC38	B - 17	TP18	A - 21		

FORMER
NTSC; # 20001 – 20299
PS ; # 20001 – 20199

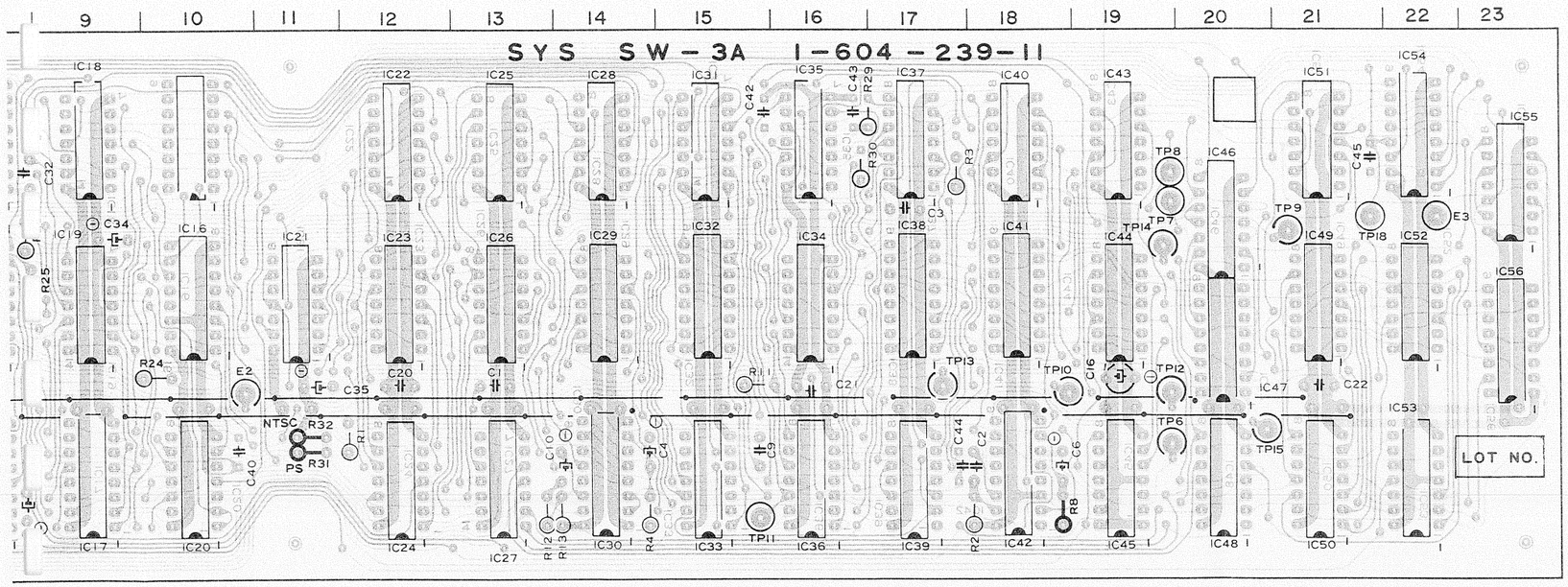

BVH-1100A (NTSC)
BVH-1100APS
BVH-1100APM
SYS SW-3A BOARD
1-604-239-11

D1	A - 1	IC30	C - 14	TP1	B - 5
		IC31	A - 15	TP2	C - 2
E1	B - 2	IC32	B - 15	TP3	A - 2
E2	C - 10	IC33	C - 15	TP4	A - 2
E3	B - 22	IC34	B - 16	TP5	B - 5
		IC35	A - 16	TP6	C - 19
IC1	B - 1	IC36	C - 16	TP7	A - 19
IC2	B - 2	IC37	A - 17	TP8	A - 19
IC3	C - 2	IC38	B - 17	TP9	B - 21
IC4	A - 3	IC39	C - 17	TP10	C - 18
IC5	B - 3	IC40	A - 18	TP11	C - 15
IC6	C - 3	IC41	B - 18	TP12	C - 19
IC7	A - 4	IC42	C - 18	TP13	B - 17
IC8	B - 4	IC43	A - 19	TP14	B - 19
IC9	C - 5	IC44	B - 19	TP15	C - 20
IC10	A - 5	IC45	C - 19	TP16	B - 3
IC11	C - 6	IC46	A - 20	TP17	B - 5
IC12	A - 6	IC47	B - 20	TP18	B - 21
IC13	C - 7	IC48	C - 20		
IC14	A - 8	IC49	B - 21		
IC15	C - 8	IC50	C - 21		
IC16	B - 10	IC51	A - 21		
IC17	C - 9	IC52	B - 22		
IC18	A - 9	IC53	C - 22		
IC19	B - 9	IC54	A - 22		
IC20	C - 10	IC55	A - 23		
IC21	B - 11	IC56	B - 23		
IC22	A - 12	IC57	A - 7		
IC23	B - 12	IC58	C - 4		
IC24	C - 12	IC59	B - 2		
IC25	A - 13	IC60	A - 10		
IC26	B - 13				
IC27	C - 13	R15	B - 4		
IC28	A - 14				
IC29	B - 14				

NEW
NTSC; # 20301 –
PS ; # 20201 –

SYS SW-3A BOARD

System Control

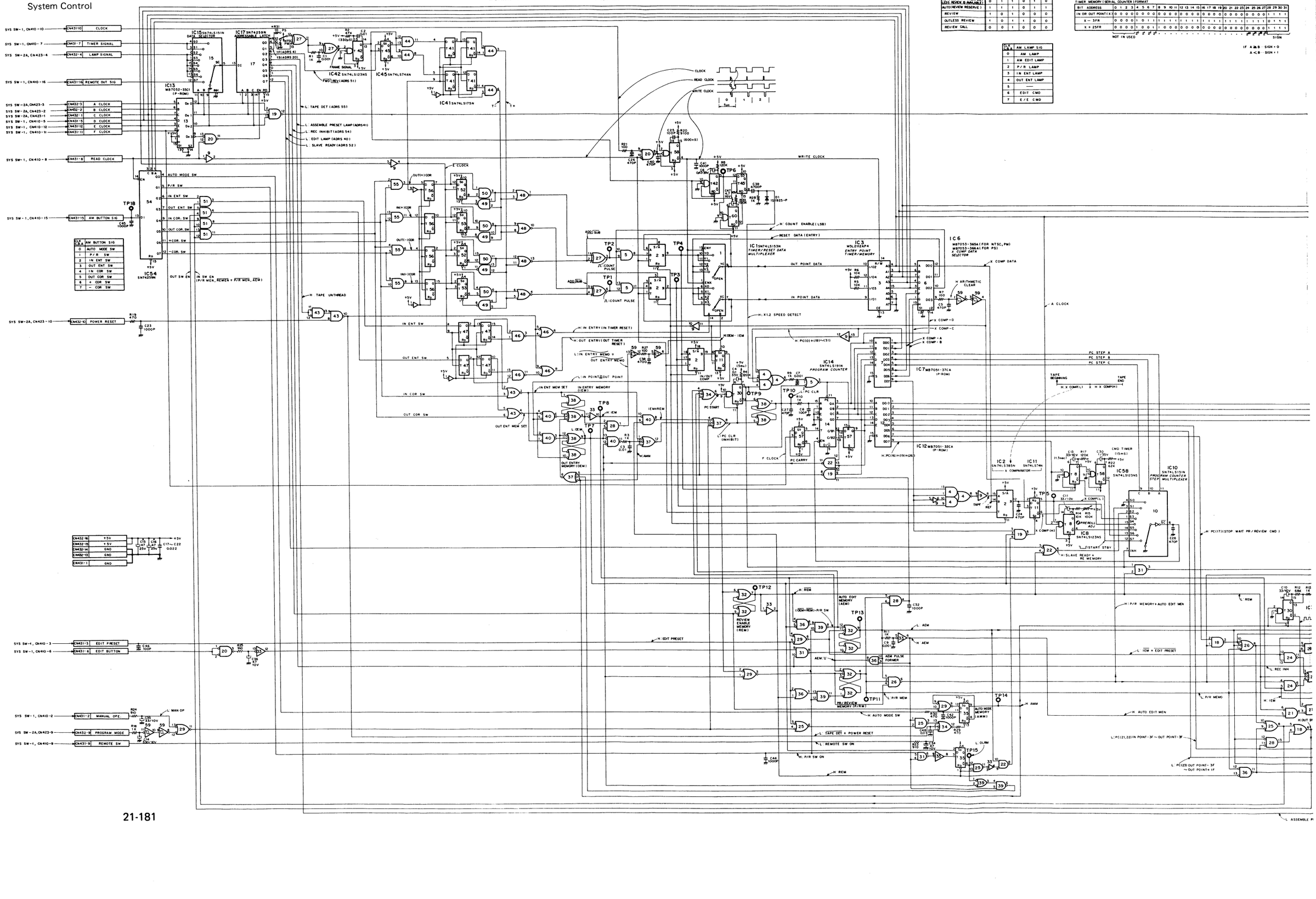

CLK DATA	AM BUTTON SIG
0	AUTO MODE SW
1	P/R SW
2	IN ENT SW
3	OUT ENT SW
4	IN COR SW
5	OUT COR SW
6	+ COR SW
7	– COR SW

MODE \ MEMORY	SWR M	AEM	REM	OLRM	IEM	OEM
PREROLL CALL	0	0	0	0	1	–
PREROLL MODE	0	0	0	0	1	–
AUTO EDIT/PREVIEW CALL	0	0	0	0	1	–
PREVIEW	1	0	0	0	1	–
AUTO EDIT START	0	1	0	0	1	–
AUTO EDIT REC ON	0	1	1	0	1	–
AUTO/REVIEW RESERVE (IS POSSIBLE IF OEM=0)	0	1	1	0	1	1
AUTO/OEM OFF THEN OUTSIDE REVIEW, IS AVAILABLE)	0	1	1	0	1	0
AUTO/REVIEW RESERVE)	1	1	1	0	1	1
REVIEW	1	0	1	0	0	0
OUTLESS REVIEW	1	0	1	1	0	0
REVIEW CALL	0	0	1	0	0	0

CLK DATA	AM LAMP SIG
0	AM LAMP
1	AM EDIT LAMP
2	P/R LAMP
3	IN ENT LAMP
4	OUT ENT LAMP
5	—
6	EDIT CMD
7	E/E CMD

IC3 TIMER MEMORY (SERIAL COUNTER) FORMAT

BIT ADDRESS	0	1	2	3	4	5	6	7	8	9	10	11	12	13	14	15	16	17	18	19	20	21	22	23	24	25	26	27	28	29	30	31
IN OR OUT POINT (H)	0	0	0	0	0	0	0	0	0	0	0	0	0	0	0	0	0	0	0	0	0	0	0	0	0	0	0	0	0	0	1	1
X – 3FR	0	0	0	0	1	0	1	1	1	1	1	1	1	1	1	1	1	1	1	1	1	1	1	1	1	1	1	1	1	1	0	1
X + 25FR	0	0	0	0	1	0	0	1	1	0	0	1	0	0	0	0	0	0	0	0	0	0	0	0	0	0	0	0	0	0	1	1

NOT IN USED

SIGN

IF A ≥ B : SIGN = 0
A < B : SIGN = 1

SYS SW-3A

MODE \ MEMORY	PVR M	AEM	REM	OLRM	IEM	OEM
PREROLL CALL	0	0	0	0	1	–
PREROLL MODE	0	0	0	0	1	–
AUTO EDIT/PREVIEW CALL	0	0	0	0	1	–
PREVIEW	1	0	0	0	1	–
AUTO EDIT START	0	1	0	0	1	–
AUTO EDIT REC ON	0	1	1	0	1	–
AUTO (REVIEW RESERVE I/S POSSIBLE IF OEM=ON)	0	1	1	0	1	1
AUTO(SDI OFF THEN OUT-LESS REVIEW IS AVAILABLE)	0	1	1	0	1	0
AUTO(REVIEW RESERVE)	1	0	1	0	1	1
REVIEW	1	0	1	0	0	0
OUTLESS REVIEW	1	0	1	1	0	0
REVIEW CALL	0	0	1	0	0	0

CLK' LSB A	AM LAMP SIG
0	AM LAMP
1	AM EDIT LAMP
2	P/R LAMP
3	IN ENT LAMP
4	OUT ENT LAMP
5	——
6	EDIT CMD
7	E/E CMD

IC3
TIMER MEMORY (SERIAL COUNTER) FORMAT

BIT ADDRESS	0	1	2	3	4	5	6	7	8	9	10	11	12	13	14	15	16	17	18	19	20	21	22	23	24	25	26	27	28	29	30	31
IN OR OUT POINT (X)	0	0	0	0	0	0	0	0	0	0	0	0	0	0	0	0	0	0	0	0	0	0	0	0	0	0	0	0	1	1	1	1
X = 3FH	0	0	0	0	1	0	1	1	1	1	1	1	1	1	1	1	1	1	1	1	1	1	1	1	1	1	1	1	1	1	1	1
X + 25FH	0	0	0	0	1	0	0	1	1	1	1	1	1	1	1	1	1	1	1	1	1	1	1	1	1	1	1	1	1	1	1	1

NOT IN USED — SIGN

IF A ≥ B : SIGN = 0
A < B : SIGN = 1

IC6 (FOR NTSC/PM)
MB7063-365A
PROGRAMMED DATA

WORD (ADDRESS)	DATA OUTPUTS (IN HEXADECIMAL)
0 – 15	8, 8, 8, 8, 4, 0, 1, 1, 1, 1, 0, 0, 1, 1, 0, 0, 0, 0,
16 – 31	8, 1, 1, 1, 1, 1, 1, 1, 1, 1, 1, 3, 2, 3, 3, 3,
32 – 47	8, 8, 8, 8, 4, 0, 0, 0, 1, 1, 0, 1, 0, 0, 1, 1,
48 – 63	1, 1, 1, 1, 1, 1, 1, 1, 1, 1, 1, 1, 3, 2, 3, 3,
64 – 79	8, 8, 8, 8, 4, 0, 0, 1, 1, 0, 0, 1, 0, 1, 1, 1,
80 – 95	1, 1, 1, 1, 1, 1, 1, 1, 1, 1, 1, 1, 3, 2, 3, 3,
96 – 111	8, 8, 8, 8, 4, 0, 1, 1, 0, 0, 1, 1, 0, 1, 1, 1,
112 – 127	1, 1, 1, 1, 1, 1, 1, 1, 1, 1, 1, 1, 3, 2, 3, 3,
128 – 143	8, 8, 8, 8, 4, 0, 1, 0, 0, 1, 1, 1, 0, 0, 1, 1,
144 – 159	0, 0, 0, 0, 0, 0, 0, 0, 0, 0, 0, 0, 2, 3, 3, 3,
160 – 175	8, 8, 8, 8, 4, 0, 0, 0, 1, 1, 1, 1, 0, 0, 0, 0,
176 – 191	0, 0, 0, 0, 0, 0, 0, 0, 0, 0, 0, 0, 2, 3, 3, 3,
192 – 207	8, 8, 8, 8, 4, 1, 0, 1, 1, 1, 1, 1, 1, 1, 1, 1,
208 – 223	1, 1, 1, 1, 1, 1, 1, 1, 1, 1, 1, 1, 3, 2, 3, 3,
224 – 239	8, 8, 8, 8, 4, 0, 1, 1, 0, 0, 0, 0, 0, 0, 0, 0,
240 – 255	0, 0, 0, 0, 0, 0, 0, 0, 0, 0, 0, 0, 2, 3, 3, 3,
256 – 271	8, 8, 8, 8, 4, 0, 1, 1, 1, 0, 0, 1, 0, 0, 0, 0,
272 – 287	1, 1, 1, 1, 1, 1, 1, 1, 1, 1, 1, 1, 3, 2, 3, 3,
288 – 303	8, 8, 8, 8, 4, 0, 1, 1, 0, 0, 0, 1, 0, 1, 1, 1,
304 – 319	1, 1, 1, 1, 1, 1, 1, 1, 1, 1, 1, 1, 3, 2, 3, 3,
320 – 335	8, 8, 8, 8, 4, 0, 0, 0, 1, 1, 0, 1, 0, 0, 1, 0,
336 – 351	0, 0, 0, 0, 0, 0, 0, 0, 0, 0, 0, 0, 2, 3, 3, 3,
352 – 367	8, 8, 8, 8, 4, 1, 1, 1, 0, 0, 1, 1, 0, 1, 1, 1,
368 – 383	1, 1, 1, 1, 1, 1, 1, 1, 1, 1, 1, 1, 3, 2, 3, 3,
384 – 399	8, 8, 8, 8, 4, 0, 0, 0, 1, 1, 1, 1, 0, 1, 1, 1,
400 – 415	1, 1, 1, 1, 1, 1, 1, 1, 1, 1, 1, 1, 3, 2, 3, 3,
416 – 431	8, 8, 8, 8, 4, 0, 1, 1, 1, 0, 0, 0, 0, 0, 0, 0,
432 – 447	0, 0, 0, 0, 0, 0, 0, 0, 0, 0, 0, 0, 2, 3, 3, 3,
448 – 463	8, 8, 8, 8, 4, 0, 0, 0, 0, 0, 0, 0, 0, 0, 0, 0,
464 – 479	0, 0, 0, 0, 0, 0, 0, 0, 0, 0, 0, 0, 2, 3, 3, 3,
480 – 495	8, 8, 8, 8, 4, 0, 0, 0, 0, 0, 0, 0, 0, 0, 0, 0,
496 – 511	0, 0, 0, 0, 0, 0, 0, 0, 0, 0, 0, 0, 2, 3, 3, 3,

IC6 (FOR PAL/SECAM)
MB7063-366A
PROGRAMMED DATA

WORD (ADDRESS)	DATA OUTPUTS (IN HEXADECIMAL)
0 – 15	8, 8, 8, 8, 4, 1, 1, 0, 0, 1, 1, 0, 1, 1, 0, 0,
16 – 31	1, 1, 1, 1, 1, 1, 1, 1, 1, 1, 1, 1, 3, 2, 3, 3,
32 – 47	8, 8, 8, 8, 4, 1, 0, 0, 1, 1, 0, 1, 0, 0, 1, 1,
48 – 63	1, 1, 1, 1, 1, 1, 1, 1, 1, 1, 1, 1, 3, 2, 3, 3,
64 – 79	8, 8, 8, 8, 4, 1, 0, 1, 1, 0, 0, 1, 0, 1, 1, 1,
80 – 95	1, 1, 1, 1, 1, 1, 1, 1, 1, 1, 1, 1, 3, 2, 3, 3,
96 – 111	8, 8, 8, 8, 4, 1, 1, 0, 0, 1, 1, 0, 1, 1, 1, 1,
112 – 127	1, 1, 1, 1, 1, 1, 1, 1, 1, 1, 1, 1, 3, 2, 3, 3,
128 – 143	8, 8, 8, 8, 4, 1, 1, 1, 1, 1, 0, 1, 0, 1, 1, 1,
144 – 159	0, 0, 0, 0, 0, 0, 0, 0, 0, 0, 0, 0, 2, 3, 3, 3,
160 – 175	8, 8, 8, 8, 4, 1, 0, 0, 1, 1, 1, 1, 0, 0, 0, 0,
176 – 191	0, 0, 0, 0, 0, 0, 0, 0, 0, 0, 0, 0, 2, 3, 3, 3,
192 – 207	8, 8, 8, 8, 4, 1, 1, 1, 1, 1, 1, 1, 1, 1, 1, 1,
208 – 223	1, 1, 1, 1, 1, 1, 1, 1, 1, 1, 1, 1, 3, 2, 3, 3,
224 – 239	8, 8, 8, 8, 4, 1, 1, 0, 0, 0, 0, 0, 0, 0, 0, 0,
240 – 255	0, 0, 0, 0, 0, 0, 0, 0, 0, 0, 0, 0, 2, 3, 3, 3,
256 – 271	8, 8, 8, 8, 4, 1, 1, 0, 0, 1, 1, 0, 1, 1, 1, 0,
272 – 287	1, 1, 1, 1, 1, 1, 1, 1, 1, 1, 1, 1, 3, 2, 3, 3,
288 – 303	8, 8, 8, 8, 4, 1, 0, 1, 1, 0, 0, 1, 1, 0, 1, 1,
304 – 319	1, 1, 1, 1, 1, 1, 1, 1, 1, 1, 1, 1, 3, 2, 3, 3,
320 – 335	8, 8, 8, 8, 4, 1, 1, 0, 0, 1, 1, 1, 1, 1, 0, 0,
336 – 351	0, 0, 0, 0, 0, 0, 0, 0, 0, 0, 0, 0, 2, 3, 3, 3,
352 – 367	8, 8, 8, 8, 4, 1, 1, 1, 0, 0, 0, 0, 1, 1, 1, 1,
368 – 383	1, 1, 1, 1, 1, 1, 1, 1, 1, 1, 1, 1, 3, 2, 3, 3,
384 – 399	8, 8, 8, 8, 4, 1, 1, 0, 0, 0, 1, 1, 0, 1, 1, 1,
400 – 415	1, 1, 1, 1, 1, 1, 1, 1, 1, 1, 1, 1, 3, 2, 3, 3,
416 – 431	8, 8, 8, 8, 4, 1, 1, 0, 1, 1, 0, 0, 0, 0, 0, 0,
432 – 447	0, 0, 0, 0, 0, 0, 0, 0, 0, 0, 0, 0, 2, 3, 3, 3,
448 – 463	8, 8, 8, 8, 4, 1, 0, 0, 0, 0, 0, 0, 0, 0, 0, 0,
464 – 479	0, 0, 0, 0, 0, 0, 0, 0, 0, 0, 0, 0, 2, 3, 3, 3,
480 – 495	8, 8, 8, 8, 4, 1, 0, 0, 0, 0, 0, 0, 0, 0, 0, 0,
496 – 511	0, 0, 0, 0, 0, 0, 0, 0, 0, 0, 0, 0, 2, 3, 3, 3,

IC 7
MB7051-37CA
PROGRAMMED DATA

WORD (ADDRESS)	DATA OUTPUTS (IN HEXADECIMAL)
0 – 15	02, 0C, 2C, 2C, 4C, 2C, 6C, 2C, 6C, 2C, 11, 50, 31, 70, 70, 15,
16 – 31	1C, 04, 08, 1A, 1F, 3F, CF, AF, F3, D3, 9A, EE, EE, EE, EE, 02,

IC 12
MB7051-32CA
PROGRAMMED DATA

WORD (ADDRESS)	DATA OUTPUTS (IN HEXADECIMAL)
0 – 15	30, 31, 32, 33, 34, 34, 35, 35, 35, 35, 36, 37, 38, 39, 3A, 3B,
16 – 31	8C, 7D, 3D, BE, 3F, 2F, 2F, 1F, 3A, 3B, 8C, 3D, 3D, 3D, 3D, 3D,

IC13
MB7052-33C1
PROGRAMMED DATA

WORD (ADDRESS)	DATA OUTPUTS (IN HEXA DECIMAL)
0 15	H, H, H, H, H, H, H, H, H, H, H, H, H, H, H, H,
16 31	H, H, H, H, H, H, H, H, H, H, H, H, H, H, H, H,
32 47	H, H, H, H, H, H, H, H, H, H, H, H, H, H, H, H,
48 63	H, H, H, H, H, H, H, H, H, H, H, H, H, H, H, H,
64 79	H, H, H, H, H, H, H, H, H, H, H, H, H, H, H, H,
80 95	H, H, H, H, H, H, H, H, H, H, H, H, H, H, H, H,
96 111	H, H, H, H, H, H, H, H, H, H, H, H, H, H, H, H,
112 127	H, H, H, H, H, H, H, H, H, H, H, H, H, H, H, H,
128 143	H, H, H, H, H, H, H, H, H, H, H, H, H, H, H, H,
144 159	H, H, H, H, H, H, H, H, H, H, H, H, H, H, H, H,
160 175	H, H, H, H, H, H, H, H, H, H, H, H, H, H, H, H,
176 191	H, H, H, H, H, H, H, H, H, H, H, H, H, H, H, H,
192 207	H, H, H, H, H, H, H, H, H, H, H, H, H, H, H, H,
208 223	H, H, H, H, H, H, H, H, H, H, H, H, H, H, H, H,
224 239	H, H, H, H, H, H, H, H, 4, 4, H, H, H, H, H, H,
240 255	H, H, H, 2, 7, H, 5, 3, H, H, H, H, H, H, H, H,

◆ CHANDGED

	NTSC : UP TO # 20299 PS : UP TO # 20199	NTSC : # 20301 & UP PS : # 20201 & UP
R31 R32	PS 12 IC17 NTSC PS 13 27 11	R31 PS 12 IC17 13 27 11
C15 C16	47 10V	47 25V

REF. NO.		TYPE	PIN NO. +5V	PIN NO. GND
IC	1	SN74LS253N	16	8
	2	SN74LS385N	14	7
	3	MSL2112AP4	16	8
	4	SN74LS51N	14	7
	5	SN74LS08N	14	7
	6	MB7063-365A (NTSC, PM) MB7063-366A (PS)	16	8
	7	MB7051-37CA	16	8
	8	SN74LS123NS	16	8
	9	SN74LS04N	14	7
	10	SN74LS151N	16	8
	11	SN74LS74N	14	7
	12	MB7051-32CA	16	8
	13	MB7052-33C1	16	8
	14	SN74LS191N	16	8
	15	SN74LS151N	16	8
	16	SN74LS151N	16	8
	17	SN74279N	16	8
	18	SN74LS32N	14	7
	19	SN74LS10N	14	7
	20	SN74LS32N	14	7
	21	SN74LS02N	14	7
	22	SN74LS00N	14	7
	23	SN74LS10N	14	7
	24	SN74LS00N	14	7
	25	SN74LS00N	14	7
	26	SN74LS86N	14	7
	27	SN74LS02N	14	7
	28	SN74LS08N	14	7
	29	SN74LS123NS	16	8
	30	SN74LS00N	14	4
	31	SN74279N	16	8
	32	SN74LS04N	14	7
	33	SN74LS11N	14	7
	34	SN74LS74AN	14	7
	35	SN74LS32N	14	7
	36	SN74LS11N	14	7
	37	SN74279N	16	8
	38	SN74LS00N	14	7
	39	SN74LS32N	14	7
	40	SN74LS175N	16	8
	41	SN74LS123NS	16	8
	42	SN74LS02N	14	7
	43	SN74LS08N	14	7
	44	SN74LS74AN	14	7
	45	SN74LS00N	14	7
	46	SN74LS175N	16	8
	47	SN74LS02N	14	7
	48	SN74LS00N	14	7
	49	SN74LS08N	14	7
	50	SN74LS74N	14	7
	51	SN74279N	16	8
	52	SN74LS08N	14	7
	53	SN74LS74N	14	7
	54	SN74279N	16	8
	55	SN74LS08N	14	7
	56	SN74LS175N	16	8
	57	SN74LS74N	14	7
	58	SN74LS123NS	16	8
	59	SN74LS14N	14	7
		SN74LS123NS	16	8

SYSTEM CLOCK

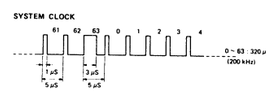

SYSTEM SIGNAL (DATA ADDRESS)

ADDRESS	COMMAND		STATUS (MODE)
0	FUNCTION A	COMMAND STROBE 1:2	32 SHUTTLE LAMP
1	FUNCTION B		33 JOG LAMP
2	FUNCTION C		34 SEARCH LAMP A
3	COMMAND STROBE 1:1		35 SEARCH LAMP B
4	SEARCH A		36 SEARCH LAMP C
5	SEARCH B		37 STILL LAMP
6	SEARCH C		38 REVERSE LAMP
7	(AUTO MODE MASTER CMDS)		39 SPARE
8	EDIT BUTTON	COMMAND STROBE 2	40 EDIT LAMP
9	ASSEMBLE PRESET BUTTON		41 ASSEMBLE LAMP
10	VIDEO PRESET BUTTON		42 VIDEO LAMP
11	AUDIO CH 1 PRESET BUTTON		43 AUDIO CH 1 LAMP
12	AUDIO CH 2 PRESET BUTTON		44 AUDIO CH 2 LAMP
13	AUDIO CH 3 REC BUTTON		45 AUDIO CH 3 LAMP
14	REMOTE E E BUTTON		46 AUDIO CH 3 400 Hz LAMP
15	STANDBY BUTTON		47 REC LAMP
16	SPARE 2 (USER BIT SEL R)	COMMAND STROBE 3	48 STOP LAMP
17	REC BUTTON (REC SAFETY)		49 PLAY LAMP
18	AUDIO CH 3 400 Hz BUTTON		50 STANDBY LAMP
19	TIMER RESET SW		51 COUNTER REV (TAPE DIRECTION)
20	SHUTTLE BUTTON	COMMAND STROBE 1:2	52 AUTO MODE SLAVE READY
21	JOG BUTTON		53 REMOTE E E LAMP
22	(AUTO MODE MEMORY)		54 (SPARE REC INHIBIT)
23	REMOTE GO		55 TAPE UNTHREAD
24	ZERO MEMORY 1 ON/OFF SW		56 SPARE
25	ZERO MEMORY 2 ON/OFF SW		57 DISPLAY SELECT
26	SPEED COMMAND		58 CAPSTAN LOCK LAMP
27	REC SAFETY		59 DRUM LOCK LAMP
28	EXT SYNC/INPUT VIDEO SELECT		60 ZERO STOP LAMP
29	COMMAND STROBE 3		61 VH LOCK LAMP
30	COMMAND STROBE 2		62 REMOTE
31	COMMAND STROBE 1:2		63 (NO USED : INDEX)

SYS SW-3A (NTSC, PS, PM)

BOARD NO, 1 – 588 – 368 – 13
1 – 604 – 239 – 11
BVH – 1100A (J) : # 20001 –
BVH – 1100A (U/C) : # 20001 –
BVH – 1100APS : # 20001 –
BVH – 1100APM : # 20001 –

SYS SW-4	SYS SW-4

SYS SW-4 BOARD — *COMPONENT SIDE* —

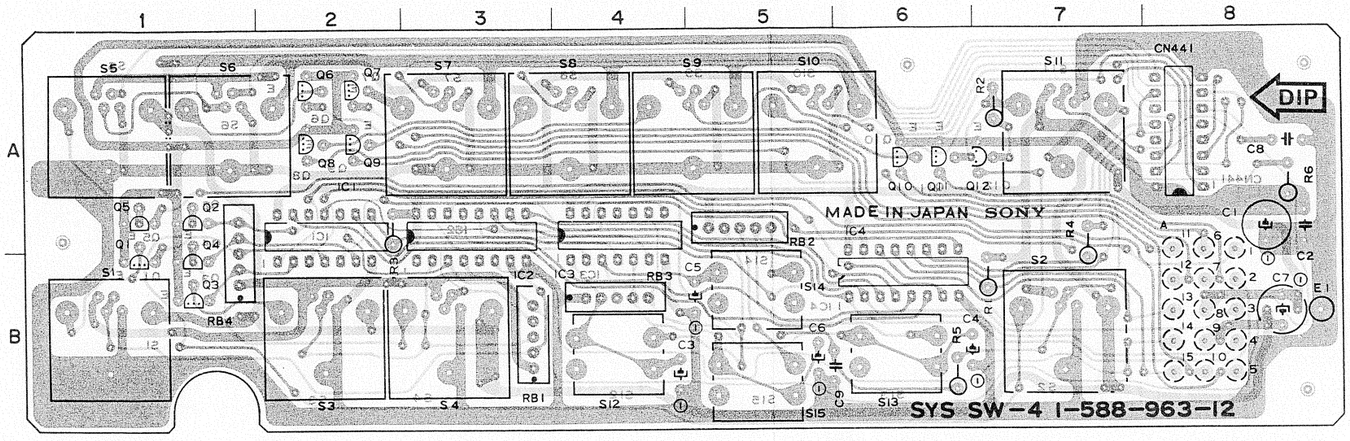

BVH-1100A (NTSC)
BVH-1100APS
BVH-1100APM
SYS SW-4 BOARD
1-588-963-12

E1	B - 8
IC1	A - 2
IC2	A - 3
IC3	A - 4
IC4	B - 6
Q1	B - 1
Q2	A - 1
Q3	B - 1
Q4	B - 1
Q5	A - 1
Q6	A - 2
Q7	A - 2
Q8	A - 2
Q9	A - 2
Q10	A - 6
Q11	A - 6
Q12	A - 7
S1	B - 1
S2	B - 7
S3	B - 2
S4	B - 3
S5	A - 1
S6	A - 1
S7	A - 3
S8	A - 4
S9	A - 5
S10	A - 5
S11	A - 7
S12	A - 4
S13	B - 6
S14	B - 5
S15	B - 5

SYS SW-4 BOARD

Edit System Control

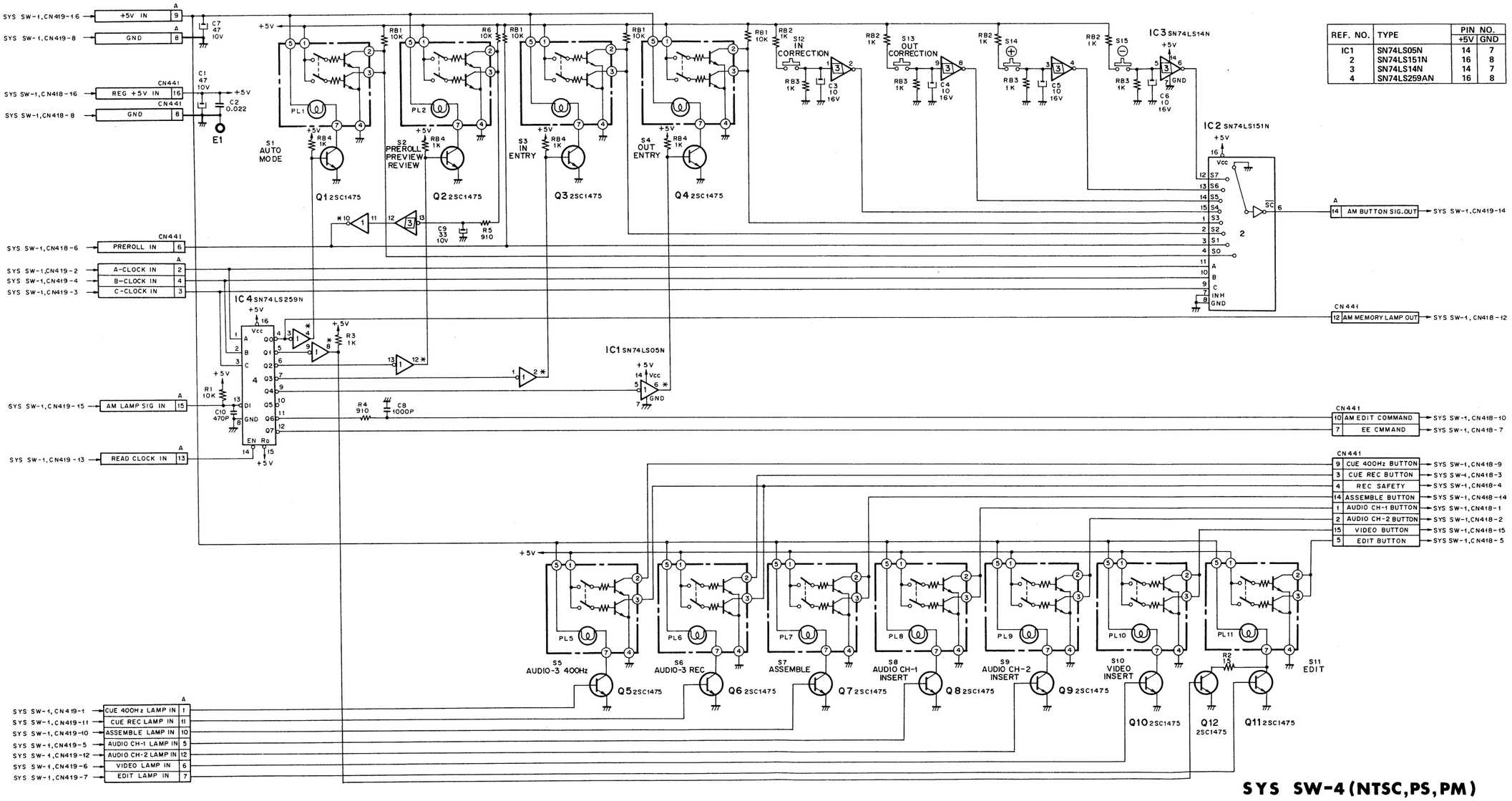

REF. NO.	TYPE	PIN NO. +5V	PIN NO. GND
IC1	SN74LS05N	14	7
2	SN74LS151N	16	8
3	SN74LS14N	14	7
4	SN74LS259AN	16	8

SYS SW-4 (NTSC,PS,PM)

BOARD NO. : 1-588-963-12
BVH-1100A(J) : # 20001-
BVH-1100A(U/C) : # 20001-
BVH-1100APS : # 20001-
BVH-1100APM : # 20001-

SYS SW-5 BOARD — *COMPONENT SIDE* —

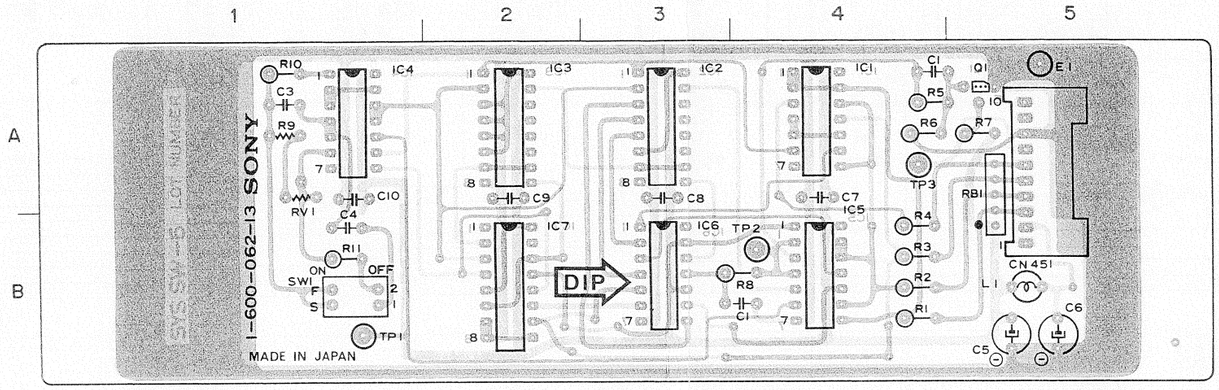

BVH-1100A (NTSC)
BVH-1100APS
BVH-1100APM
SYS SW-5 BOARD
1-600-062-13

E1	A - 5
IC1	A - 4
IC2	A - 3
IC3	A - 2
IC4	A - 1
IC5	B - 4
IC6	B - 3
IC7	B - 2
Q1	A - 5
RV1	A - 1
SW1	B - 1
TP1	B - 1
TP2	B - 4
TP3	A - 4

SYS SW-5 BOARD

Programmed JOG System Control

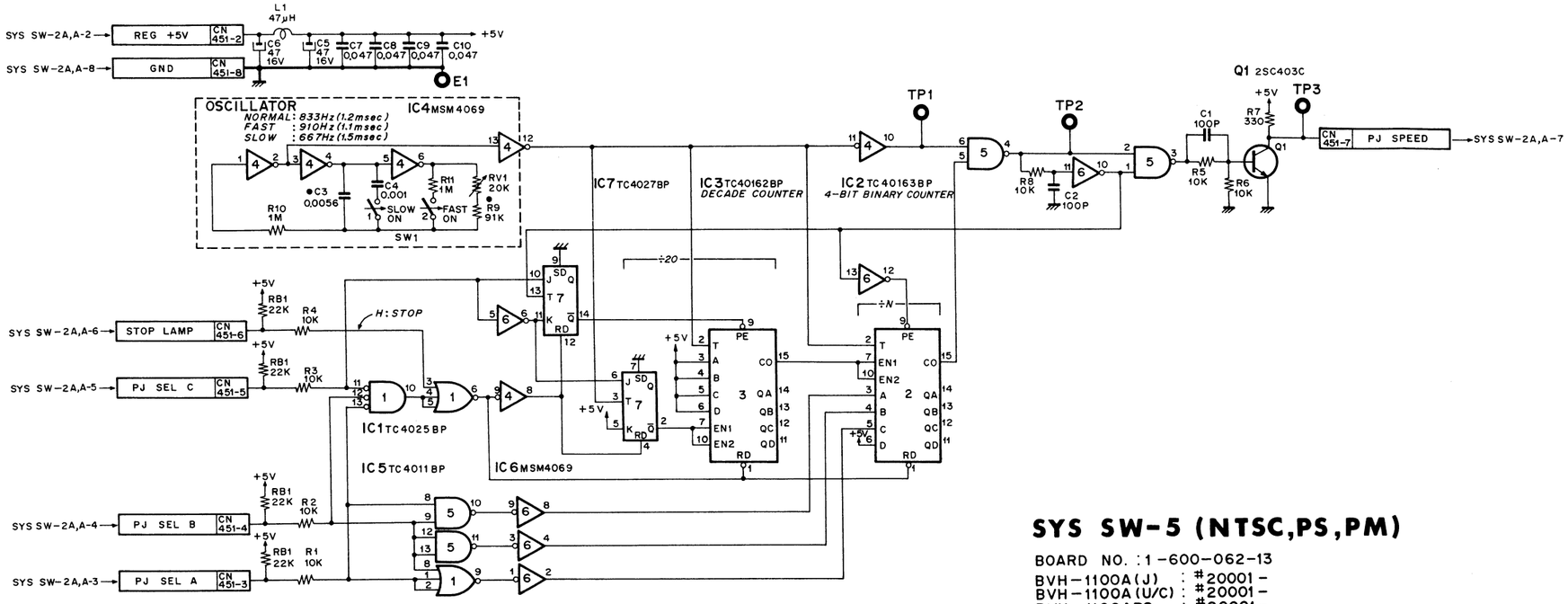

• CHANGED

	NTSC : UP TO #20299 PS : UP TO #20199	NTSC : #20301 & UP PS : #20201 & UP
C3	0.0047	0.0056
R9	100K	91K

REF NO.	TYPE	PIN NO. +5V	PIN NO. GND
IC1	TC4025BP(CD4025BE; RCA)	14	7
2	TC40163BP(MC14163BCP; MOTOROLA)	16	8
3	TC40162BP(MC14162BCP; MOTOROLA)	16	8
4	MSM4069(CD4069AE; RCA)	14	7
5	TC4011BP(CD4011BE; RCA)	14	7
6	MSM4069(CD4069AE; RCA)	14	7
7	TC4027BP(CD4027BE; RCA)	16	8

SYS SW-5 (NTSC,PS,PM)

BOARD NO. : 1-600-062-13

BVH-1100A(J) : #20001-
BVH-1100A(U/C) : #20001-
BVH-1100APS : #20001-
BVH-1100APM : #20001-

TAPE TIMER-A BOARD — *COMPONENT SIDE* —

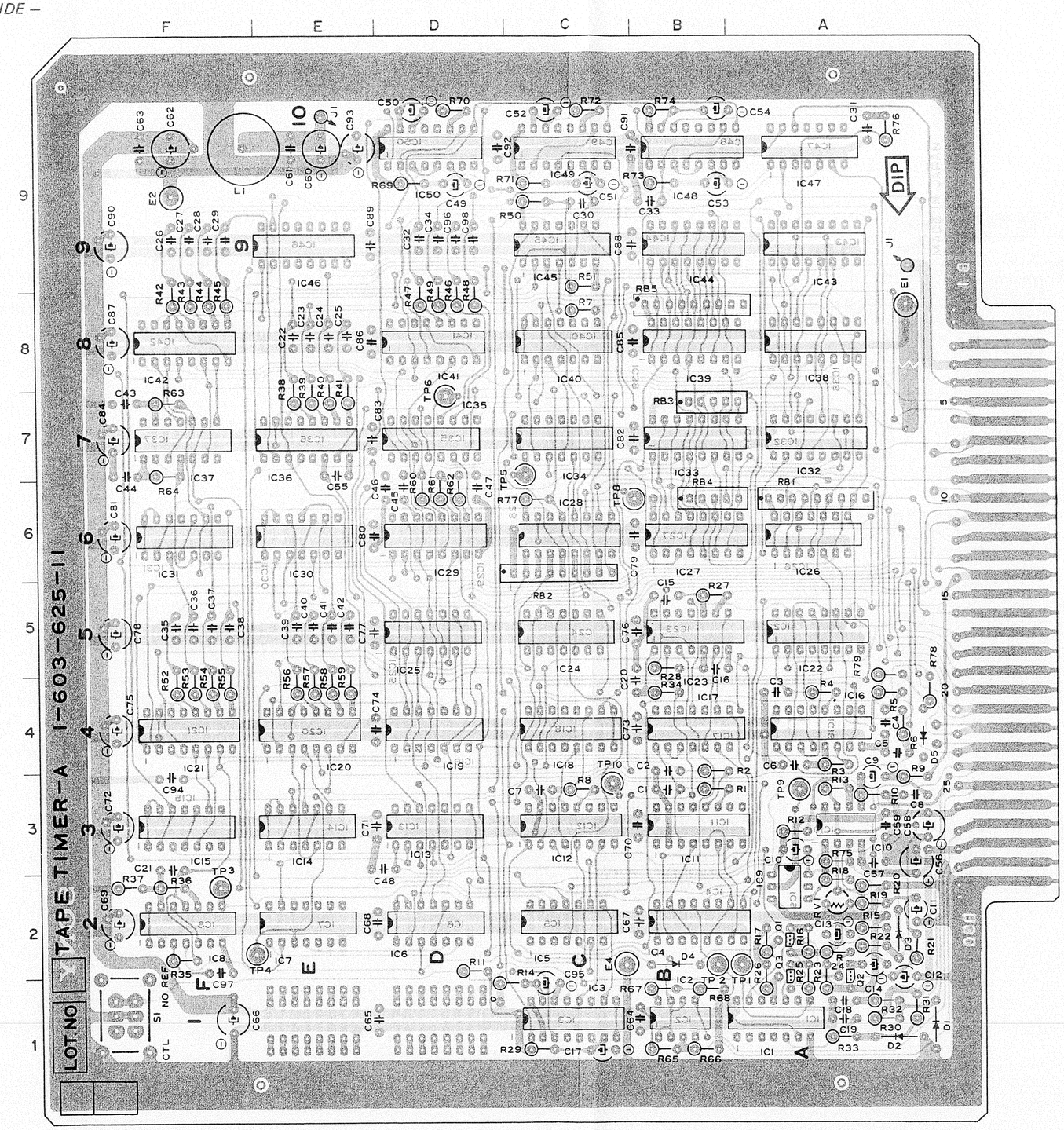

BVH-1100A (NTSC)
BVH-1100APS
BVH-1100APM
TAPE TIMER-A BOARD
1-603-625-11

D1	A - 1
D2	A - 1
D3	A - 2
D4	B - 2
D5	A - 4
E1	A - 8
E2	F - 9
E4	C - 2
IC1	A - 1
IC2	B - 1
IC3	C - 1
IC4	B - 2
IC5	C - 2
IC6	D - 2
IC7	E - 2
IC8	F - 2
IC9	A - 2
IC10	A - 3
IC11	B - 3
IC12	C - 3
IC13	D - 3
IC14	E - 3
IC15	F - 3
IC16	A - 4
IC17	B - 4
IC18	C - 4
IC19	D - 4
IC20	E - 4
IC21	F - 4
IC22	A - 5
IC23	B - 5
IC24	C - 5
IC25	D - 5
IC26	A - 6
IC27	B - 6
IC28	C - 6
IC29	D - 6
IC30	E - 6
IC31	F - 6
IC32	A - 7
IC33	B - 7
IC34	C - 7
IC35	D - 7
IC36	E - 7
IC37	F - 7
IC38	A - 8
IC39	B - 8
IC40	C - 8
IC41	D - 8
IC42	F - 8
IC43	A - 9
IC44	B - 9
IC45	C - 9
IC46	E - 9
IC47	A - 10
IC48	B - 10
IC49	C - 10
IC50	D - 10
Q1	A - 2
Q2	A - 1
Q3	A - 1
RV1	A - 2
S1	F - 1
TP1	A - 1
TP2	B - 1
TP3	F - 2
TP4	E - 2
TP5	C - 7
TP6	D - 7
TP8	B - 6
TP9	A - 3
TP10	C - 3

TAPE TIMER-A BOARD

ADDRESS	REF. No.	TYPE	PIN. No. +12V	PIN. No. −12V	PIN. No. +5V	PIN. No. GND
1-A	IC 1	SN74LS14N			14	7
1-B	2	HD75462BP			8	4
1-C	3	SN74LS123NS			16	8
2-B	4	SN74175N			16	8
2-C	5	SN74LS00N			14	7
2-D	6	SN74LS74N			14	7
2-E	7	SN74LS107N			14	7
2-F	8	SN74LS74N			14	7
2-A	9	TX-429D				
3-A	10	TL082CP	8	4		
3-B	11	MB7052-TAM4			16	8
3-C	12	MB7052-TAM5			16	8
3-D	13	SN74LS14N			14	7
3-E	14	SN74LS74N			14	7
3-F	15	SN74LS74N			14	7
4-A	16	MB7052-TAMC			16	8
4-B	17	SN74LS04N			14	7
4-B	18	SN74LS191N			16	8
4-B	19	SN74LS04N			14	7
4-B	20	MB7052-TAM6			16	8
4-B	21	MB7052-TAM7			16	8
5-A	22	SN74LS161N			16	8
5-B	23	SN74LS86N			14	7
5-C	24	SN7474N			14	7
5-D	25	SN74LS10N			14	7

ADDRESS	REF. No.	TYPE	PIN. No. +12V	PIN. No. −12V	PIN. No. +5V	PIN. No. GND
6-A	IC 26	SN7407N				14
6-B	27	SN7489N				16
6-C	28	MB7056-TAME			16	8
6-D	29	MB7052-TAMF			16	8
6-E	30	SN74LS74N			14	7
6-F	31	SN74LS74N			14	7
7-A	32	SN74LS157N				16
7-B	33	SN7489N				16
7-C	34	SN74LS00N				14
7-D	35	MB7052-TAMG				16
7-E	36	MB7052-TAM9			16	8
7-F	37	SN74LS86N			14	7
8-A	38	SN74LS283N				16
8-B	39	IM5600-TAM2			16	8
8-C	40	SN74LS107N			14	7
8-D	41	MB7052-TAMH			16	8
8-F	42	MB7052-TAMA			16	8
9-A	43	SN74LS153N				16
9-B	44	IM5600-TAM3			16	8
9-C	45	SN74LS04N			14	7
9-E	46	SN74161N				16
10-A	47	SN74LS04N			14	7
10-B	48	SN74LS123NS			16	8
10-C	49	SN74LS123NS			16	8
10-D	50	SN74LS123NS			16	8

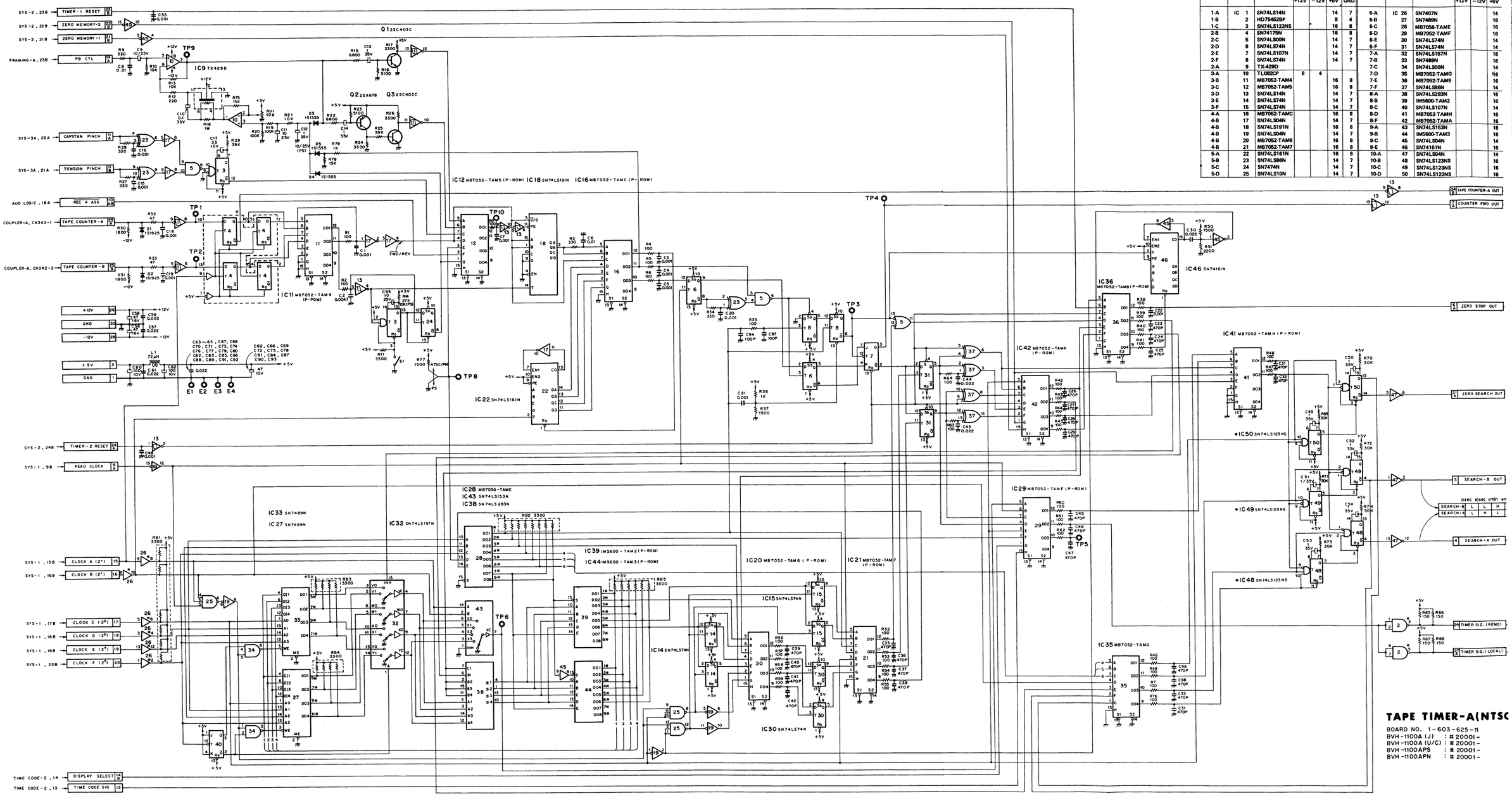

TAPE TIMER-A(NTSC

BOARD NO. 1-603-625-11
BVH-1100A (J) : # 20001-
BVH-1100A (U/C) : # 20001-
BVH-1100APS : # 20001-
BVH-1100APN : # 20001-

ADDRESS	REF. No.	TYPE	PIN. No. +12V	−12V	+5V	GND
1-A	IC 1	SN74LS14N			14	7
1-B	2	HD7546228P			8	4
1-C	3	SN74LS123NS			16	8
2-B	4	SN74175N			16	8
2-C	5	SN74LS00N			14	7
2-D	6	SN74LS74N			14	7
2-E	7	SN74LS107N			14	7
2-F	8	SN74LS74N			14	7
2-A	9	TX-429D				
3-A	10	TL062CP	8	4		
3-B	11	MB7052-TAM4			16	8
3-C	12	MB7052-TAM5			16	8
3-D	13	SN74LS14N			14	7
3-E	14	SN74LS74N			14	7
3-F	15	SN74LS74N			14	7
4-A	16	MB7052-TAMC			16	8
4-B	17	SN74LS04N			14	7
4-B	18	SN74LS191N			16	8
4-B	19	SN74LS04N			14	7
4-B	20	MB7052-TAM6			16	8
4-B	21	MB7052-TAM7			16	8
5-A	22	SN74LS161N			16	8
5-B	23	SN74LS86N			14	7
5-C	24	SN7474N			14	7
5-D	25	SN74LS10N			14	7

ADDRESS	REF. No.	TYPE	PIN. No. +12V	−12V	+5V	GND
6-A	IC 26	SN7407N			14	7
6-B	27	SN7486N			16	8
6-C	28	MB7056-TAME			16	8
6-D	29	MB7052-TAMF			16	8
6-E	30	SN74LS74N			14	7
6-F	31	SN74LS74N			14	7
7-A	32	SN74LS157N			16	8
7-B	33	SN7486N			16	8
7-C	34	SN74LS00N			14	7
7-D	35	MB7052-TAMG			16	8
7-E	36	MB7052-TAM9			16	8
7-F	37	SN74LS86N			14	7
8-A	38	SN74LS283N			16	8
8-B	39	IM5600-TAM2			16	8
8-C	40	SN74LS107N			14	7
8-D	41	MB7052-TAMH			16	8
8-F	42	MB7052-TAMA			16	8
9-A	43	SN74LS153N			16	8
9-B	44	IM5600-TAM3			16	8
9-C	45	SN74LS04N			14	7
9-E	46	SN74161N			16	8
10-A	47	SN74LS04N			14	7
10-B	48	SN74LS123NS			16	8
10-C	49	SN74LS123NS			16	8
10-D	50	SN74LS123NS			16	8

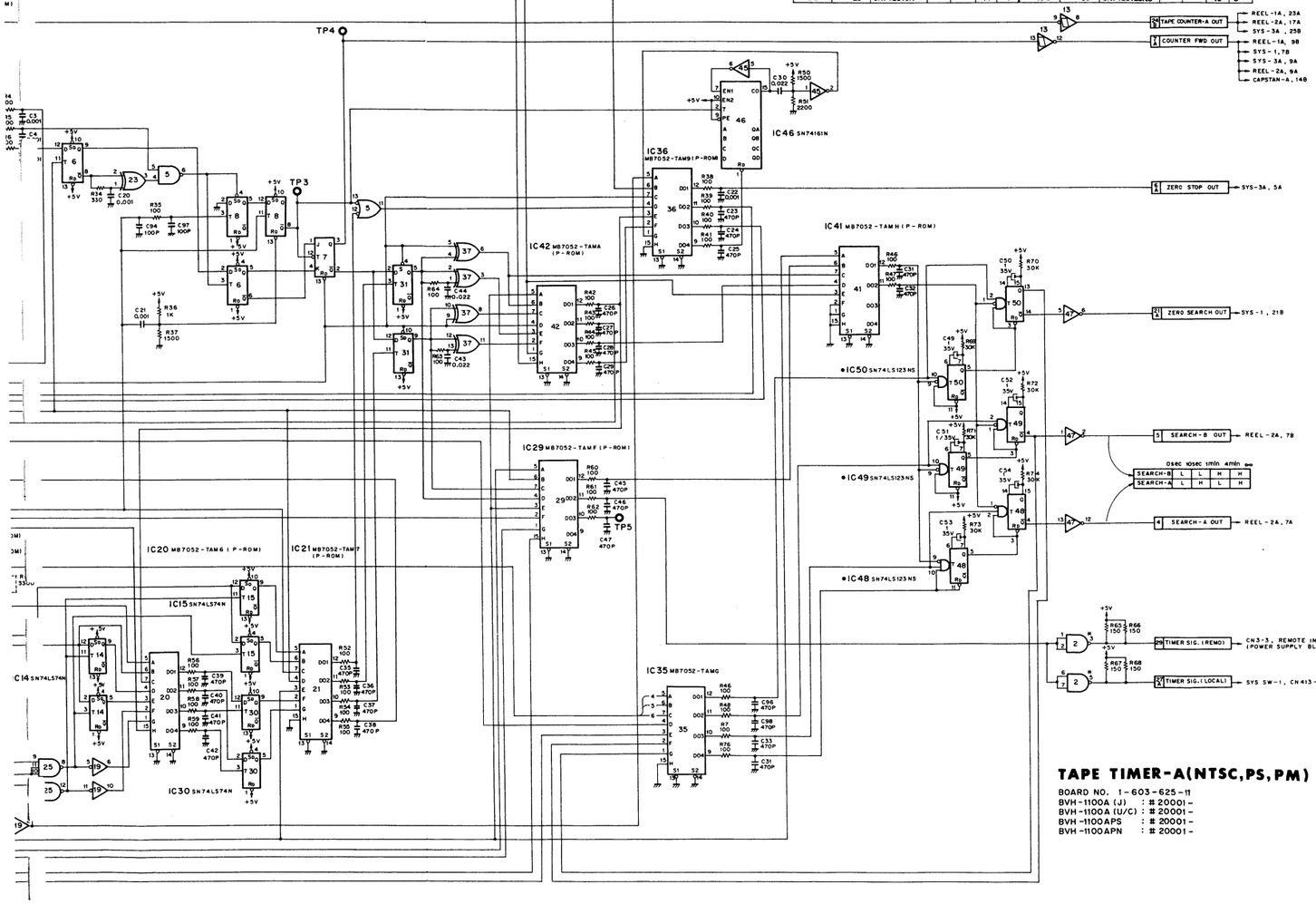

TAPE TIMER-A(NTSC,PS,PM)

BOARD NO. 1-603-625-11
BVH-1100A (J) : # 20001-
BVH-1100A (U/C) : # 20001-
BVH-1100APS : # 20001-
BVH-1100APN : # 20001-

IC42
MB7052-TAMA
PROGRAMMED DATA

WORD (ADDRESS)	DATA OUTPUTS (IN HEXA-DECIMAL)
0 – 15	9. 9. 9. 9. 9. 9. 9. 9. 9. 9. A. A. 9. A. A.
16 – 31	9. 9. 9. 9. 9. 9. 9. 9. 9. 9. A. A. 9. A. A.
32 – 47	9. 9. 9. 9. 9. 9. 9. 9. 9. 9. A. A. 9. A. A.
48 – 63	9. 9. 9. 9. 9. 9. 9. 9. 9. 9. A. A. 9. A. A.
64 – 79	9. 9. 9. 9. 9. 9. 9. 9. 9. 9. A. A. 9. A. A.
80 – 95	1. 1. 1. 1. 1. 1. 1. 1. 1. 1. 2. 2. 1. 2. 2.
96 – 111	9. 9. 9. 9. 9. 9. 9. 9. 9. 9. A. A. 9. A. A.
112 – 127	1. 1. 1. 1. 1. 1. 1. 1. 1. 1. 2. 2. 1. 2. 2.
128 – 143	9. 9. 9. 9. D. D. D. D. 9. 9. A. E. D. E. E.
144 – 159	9. 9. 9. 9. D. D. D. D. 9. 9. A. E. D. E. E.
160 – 175	1. 1. 1. 1. 5. 5. 5. 5. 1. 1. 2. 6. 5. 6. 6.
176 – 191	1. 1. 1. 1. 5. 5. 5. 5. 1. 1. 2. 6. 5. 6. 6.
192 – 207	9. 9. 9. 9. D. D. D. D. 9. 9. A. E. D. E. E.
208 – 223	1. 1. 1. 1. 5. 5. 5. 5. 1. 1. 2. 6. 5. 6. 6.
224 – 239	1. 1. 1. 1. 5. 5. 5. 5. 1. 1. 2. 6. 5. 6. 6.
240 – 255	1. 1. 1. 1. 5. 5. 5. 5. 1. 1. 2. 6. 5. 6. 6.

IC41
MB7052-TAMH
PROGRAMMED DATA

WORD (ADDRESS)	DATA OUTPUTS (IN HEXADECIMAL)
0 – 15	0. 0. 0. 0. 0. 0. 0. 0. 1. 1. 0. 1. 1. 1. 0. 1.
16 – 31	0. 0. 0. 0. 2. 2. 2. 0. 1. 1. 0. 1. 3. 3. 2. 1.
32 – 47	0. 0. 0. 0. 0. 0. 0. 0. 0. 0. 0. 0. 0. 0. 0. 0.
48 – 63	0. 0. 0. 0. 0. 0. 0. 0. 0. 0. 0. 0. 0. 0. 0. 0.
64 – 79	0. 0. 0. 0. 0. 0. 0. 0. 0. 0. 0. 0. 0. 0. 0. 0.
80 – 95	0. 0. 0. 0. 0. 0. 0. 0. 0. 0. 0. 0. 0. 0. 0. 0.
96 – 111	0. 0. 0. 0. 0. 0. 0. 0. 0. 0. 0. 0. 0. 0. 0. 0.
112 – 127	0. 0. 0. 0. 0. 0. 0. 0. 0. 0. 0. 0. 0. 0. 0. 0.
128 – 143	0. 0. 0. 0. 0. 0. 0. 0. 0. 0. 0. 0. 0. 0. 0. 0.
144 – 159	0. 0. 0. 0. 0. 0. 0. 0. 0. 0. 0. 0. 0. 0. 0. 0.
160 – 175	0. 0. 0. 0. 0. 0. 0. 0. 0. 0. 0. 0. 0. 0. 0. 0.
176 – 191	0. 0. 0. 0. 0. 0. 0. 0. 0. 0. 0. 0. 0. 0. 0. 0.
192 – 207	0. 0. 0. 0. 0. 0. 0. 0. 0. 0. 0. 0. 0. 0. 0. 0.
208 – 223	0. 0. 0. 0. 0. 0. 0. 0. 0. 0. 0. 0. 0. 0. 0. 0.
224 – 239	0. 0. 0. 0. 0. 0. 0. 0. 0. 0. 0. 0. 0. 0. 0. 0.
240 – 255	0. 0. 0. 0. 0. 0. 0. 0. 0. 0. 0. 0. 0. 0. 0. 0.

IC16
MB7052-TAMC
PROGRAMMED DATA

WORD (ADDRESS)	DATA OUTPUTS (IN HEXA-DECIMAL)
0 – 15	1. 1. 0. 1. 1. 0. 1. 1. 3. 3. 2. 3. 5. 4. 5. 5.
16 – 31	3. 3. 2. 3. 5. 4. 5. 5. 3. 3. 2. 3. 5. 4. 5. 5.
32 – 47	3. 3. 2. 3. 5. 4. 5. 5. 7. 7. 6. 7. 7. 6. 7. 7.
48 – 63	7. 7. 6. 7. 7. 6. 7. 7. 7. 7. 6. 7. 7. 6. 7. 7.
64 – 79	7. 7. 6. 7. 7. 6. 7. 7. 5. 5. 4. 5. 3. 2. 3. 3.
80 – 95	5. 5. 4. 5. 3. 2. 3. 3. 5. 5. 4. 5. 3. 2. 3. 3.
96 – 111	5. 5. 4. 5. 3. 2. 3. 3. 1. 1. 0. 1. 1. 0. 1. 1.
112 – 127	1. 1. 0. 1. 1. 0. 1. 1. 1. 1. 0. 1. 1. 0. 1. 1.
128 – 143	0. 0. 0. 0. 0. 0. 0. 0. 0. 0. 0. 0. 0. 0. 0. 0.
144 – 159	0. 0. 0. 0. 0. 0. 0. 0. 0. 0. 0. 0. 0. 0. 0. 0.
160 – 175	0. 0. 0. 0. 0. 0. 0. 0. 0. 0. 0. 0. 0. 0. 0. 0.
176 – 191	0. 0. 0. 0. 0. 0. 0. 0. 0. 0. 0. 0. 0. 0. 0. 0.
192 – 207	0. 0. 0. 0. 0. 0. 0. 0. 0. 0. 0. 0. 0. 0. 0. 0.
208 – 223	0. 0. 0. 0. 0. 0. 0. 0. 0. 0. 0. 0. 0. 0. 0. 0.
224 – 239	0. 0. 0. 0. 0. 0. 0. 0. 0. 0. 0. 0. 0. 0. 0. 0.
240 – 255	0. 0. 0. 0. 0. 0. 0. 0. 0. 0. 0. 0. 0. 0. 0. 0.

IC11
MB7052-TAM4
PROGRAMMED DATA

WORD (ADDRESS)	DATA OUTPUTS (IN HEXA-DECIMAL)
0 – 15	0. 1. 3. 0. 3. 0. 0. 1. 1. 0. 0. 3. 0. 3. 1. 0.
16 – 31	2. 1. 3. 2. 3. 2. 2. 1. 1. 2. 2. 3. 2. 3. 1. 2.
32 – 47	0. 0. 0. 0. 0. 0. 0. 0. 0. 0. 0. 0. 0. 0. 0. 0.
48 – 63	0. 0. 0. 0. 0. 0. 0. 0. 0. 0. 0. 0. 0. 0. 0. 0.
64 – 79	0. 0. 0. 0. 0. 0. 0. 0. 0. 0. 0. 0. 0. 0. 0. 0.
80 – 95	0. 0. 0. 0. 0. 0. 0. 0. 0. 0. 0. 0. 0. 0. 0. 0.
96 – 111	0. 0. 0. 0. 0. 0. 0. 0. 0. 0. 0. 0. 0. 0. 0. 0.
112 – 127	0. 0. 0. 0. 0. 0. 0. 0. 0. 0. 0. 0. 0. 0. 0. 0.
128 – 143	0. 0. 0. 0. 0. 0. 0. 0. 0. 0. 0. 0. 0. 0. 0. 0.
144 – 159	0. 0. 0. 0. 0. 0. 0. 0. 0. 0. 0. 0. 0. 0. 0. 0.
160 – 175	0. 0. 0. 0. 0. 0. 0. 0. 0. 0. 0. 0. 0. 0. 0. 0.
176 – 191	0. 0. 0. 0. 0. 0. 0. 0. 0. 0. 0. 0. 0. 0. 0. 0.
192 – 207	0. 0. 0. 0. 0. 0. 0. 0. 0. 0. 0. 0. 0. 0. 0. 0.
208 – 223	0. 0. 0. 0. 0. 0. 0. 0. 0. 0. 0. 0. 0. 0. 0. 0.
224 – 239	0. 0. 0. 0. 0. 0. 0. 0. 0. 0. 0. 0. 0. 0. 0. 0.
240 – 255	0. 0. 0. 0. 0. 0. 0. 0. 0. 0. 0. 0. 0. 0. 0. 0.

IC35
MB7052-TAMG
PROGRAMMED DATA

WORD (ADDRESS)	DATA OUTPUTS (IN HEXADECIMAL)
0 – 15	0. 0. 4. 4. 7. 6. 0. 0. 0. 0. 0. 0. 7. 6. 4. 4.
16 – 31	0. 0. 0. 0. 7. 6. 4. 4. 0. 0. 0. 0. 7. 6. 4. 4.
32 – 47	8. 8. C. C. F. E. 8. 8. 8. 8. 8. 8. F. E. C. C.
48 – 63	8. 8. 8. 8. F. E. C. C. 8. 8. 8. 8. F. E. C. C.
64 – 79	8. 8. C. C. F. E. 8. 8. 8. 8. 8. 8. F. E. C. C.
80 – 95	8. 8. 8. 8. F. E. C. C. 8. 8. 8. 8. F. E. C. C.
96 – 111	8. 8. C. C. F. E. 8. 8. 8. 8. 8. 8. F. E. C. C.
112 – 127	8. 8. 8. 8. F. E. C. C. 8. 8. 8. 8. F. E. C. C.
128 – 143	0. 0. 0. 0. 0. 0. 0. 0. 0. 0. 0. 0. 0. 0. 0. 0.
144 – 159	0. 0. 0. 0. 0. 0. 0. 0. 0. 0. 0. 0. 0. 0. 0. 0.
160 – 175	0. 0. 0. 0. 0. 0. 0. 0. 0. 0. 0. 0. 0. 0. 0. 0.
176 – 191	0. 0. 0. 0. 0. 0. 0. 0. 0. 0. 0. 0. 0. 0. 0. 0.
192 – 207	0. 0. 0. 0. 0. 0. 0. 0. 0. 0. 0. 0. 0. 0. 0. 0.
208 – 223	0. 0. 0. 0. 0. 0. 0. 0. 0. 0. 0. 0. 0. 0. 0. 0.
224 – 239	0. 0. 0. 0. 0. 0. 0. 0. 0. 0. 0. 0. 0. 0. 0. 0.
240 – 255	0. 0. 0. 0. 0. 0. 0. 0. 0. 0. 0. 0. 0. 0. 0. 0.

IC12
MB7052-TAM5
PROGRAMMED DATA

WORD (ADDRESS)	DATA OUTPUTS (IN HEXA-DECIMAL)
0 – 15	1. 1. 1. 1. 1. 0. 1. 0. 1. 1. 1. 1. 1. 0. 1. 0.
16 – 31	1. 1. 1. 1. 1. 1. 0. 1. 0. 1. 1. 1. 1. 1. 0. 1. 0.
32 – 47	1. 1. 1. 1. 1. 1. 0. 1. 0. 1. 1. 1. 1. 1. 0. 1. 0.
48 – 63	1. 1. 1. 1. 1. 1. 0. 1. 0. 1. 1. 1. 1. 1. 0. 1. 0.
64 – 79	1. 1. 1. 1. 1. 1. 1. 1. 1. 1. 1. 1. 1. 1. 1. 1.
80 – 95	1. 1. 1. 1. 1. 1. 1. 1. 1. 1. 1. 1. 1. 1. 1. 1.
96 – 111	1. 1. 1. 1. 1. 1. 1. 1. 1. 1. 1. 1. 1. 1. 1. 1.
112 – 127	1. 1. 1. 1. 1. 1. 1. 1. 1. 1. 1. 1. 1. 1. 1. 1.
128 – 143	1. 1. 1. 1. 1. 1. 1. 1. 1. 1. 1. 1. 1. 1. 1. 1.
144 – 159	1. 1. 1. 1. 1. 1. 1. 1. 1. 1. 1. 1. 1. 1. 1. 1.
160 – 175	1. 1. 1. 1. 1. 1. 1. 1. 1. 1. 1. 1. 1. 1. 1. 1.
176 – 191	1. 1. 1. 1. 1. 1. 1. 1. 1. 1. 1. 1. 1. 1. 1. 1.
192 – 207	1. 1. 1. 1. 1. 1. 1. 1. 1. 1. 1. 1. 1. 1. 1. 1.
208 – 223	1. 1. 1. 1. 1. 1. 1. 1. 1. 1. 1. 1. 1. 1. 1. 1.
224 – 239	1. 1. 1. 1. 1. 1. 1. 1. 1. 1. 1. 1. 1. 1. 1. 1.
240 – 255	1. 1. 1. 1. 1. 1. 1. 1. 1. 1. 1. 1. 1. 1. 1. 1.

IC20
MB7052-TAM6
PROGRAMMED DATA

WORD (ADDRESS)	DATA OUTPUTS (IN HEXA-DECIMAL)
0 – 15	0. 0. 0. 0. 3. 0. 3. 0. 0. 0. 1. 1. 2. 0. 3. 1.
16 – 31	0. 0. 2. 2. 1. 0. 3. 2. 0. 0. 3. 3. 0. 0. 3. 3.
32 – 47	0. 0. 0. 0. 3. 0. 3. 0. 0. 0. 1. 1. 2. 0. 3. 1.
48 – 63	0. 0. 2. 2. 1. 0. 3. 2. 0. 0. 3. 3. 0. 0. 3. 3.
64 – 79	0. 0. 0. 0. 3. 0. 3. 0. 0. 0. 1. 1. 2. 0. 3. 1.
80 – 95	0. 0. 2. 2. 1. 0. 3. 2. 0. 0. 3. 3. 0. 0. 3. 3.
96 – 111	0. 0. 0. 0. 3. 0. 3. 0. 0. 0. 1. 1. 2. 0. 3. 1.
112 – 127	0. 0. 2. 2. 1. 0. 3. 2. 0. 0. 3. 3. 0. 0. 3. 3.
128 – 143	0. 0. 0. 0. 3. 0. 3. 0. 0. 0. 1. 1. 2. 0. 3. 1.
144 – 159	0. 0. 2. 2. 1. 0. 3. 2. 0. 0. 3. 3. 0. 0. 3. 3.
160 – 175	4. 4. 4. 4. 7. 4. 7. 4. 4. 4. 5. 5. 6. 4. 7. 5.
176 – 191	6. 4. 6. 6. 5. 4. 7. 6. 4. 4. 7. 7. 4. 4. 7. 7.
192 – 207	8. 8. 8. 8. B. 8. 8. 8. 8. 8. 9. 9. A. 8. B. 9.
208 – 223	8. 8. A. A. 9. 8. B. A. 8. 8. B. B. 8. 8. B. B.
224 – 239	C. C. C. C. F. C. F. C. C. C. D. D. E. C. F. D.
240 – 255	C. C. E. E. D. C. F. E. C. C. F. F. C. C. F. F.

IC21
MB7052-TAM7
PROGRAMMED DATA

WORD (ADDRESS)	DATA OUTPUTS (IN HEXA-DECIMAL)
0 – 15	1. 0. 1. 0. 1. 0. 1. 0. 1. 0. 1. 0. 1. 4. 1. 4.
16 – 31	1. 1. 0. 0. 1. 1. 0. 0. 1. 1. 0. 0. 1. 1. 2. 2.
32 – 47	9. 8. 9. 8. 9. 8. 9. 8. 9. 8. 9. 8. 9. C. 9. C.
48 – 63	1. 1. 0. 0. 1. 1. 0. 0. 1. 1. 0. 0. 1. 1. 2. 2.
64 – 79	1. 0. 1. 0. 1. 0. 1. 0. 1. 0. 1. 4. 1. 4.
80 – 95	9. 9. 8. 8. 9. 9. 8. 8. 9. 9. 8. 8. 9. 9. A. A.
96 – 111	9. 8. 9. 8. 9. 8. 9. 8. 9. 8. 9. C. 9. C.
112 – 127	9. 9. 8. 8. 9. 9. 8. 8. 9. 9. 8. 8. 9. 9. A. A.
128 – 143	0. 0. 0. 0. 0. 0. 0. 0. 0. 0. 0. 0. 0. 0. 0. 0.
144 – 159	0. 0. 0. 0. 0. 0. 0. 0. 0. 0. 0. 0. 0. 0. 0. 0.
160 – 175	0. 0. 0. 0. 0. 0. 0. 0. 0. 0. 0. 0. 0. 0. 0. 0.
176 – 191	0. 0. 0. 0. 0. 0. 0. 0. 0. 0. 0. 0. 0. 0. 0. 0.
192 – 207	0. 0. 0. 0. 0. 0. 0. 0. 0. 0. 0. 0. 0. 0. 0. 0.
208 – 223	0. 0. 0. 0. 0. 0. 0. 0. 0. 0. 0. 0. 0. 0. 0. 0.
224 – 239	0. 0. 0. 0. 0. 0. 0. 0. 0. 0. 0. 0. 0. 0. 0. 0.
240 – 255	0. 0. 0. 0. 0. 0. 0. 0. 0. 0. 0. 0. 0. 0. 0. 0.

IC29
MB7052-TAMF
PROGRAMMED DATA

WORD (ADDRESS)	DATA OUTPUTS (IN HEXADECIMAL)
0 – 15	6. 6. 6. 7. 2. 2. 2. 3. 6. 6. 6. 7. 2. 2. 2. 3.
16 – 31	6. 6. 6. 7. 6. 6. 6. 7. 2. 2. 2. 3. 2. 2. 2. 3.
32 – 47	6. 6. 6. 7. 2. 2. 2. 3. 6. 6. 6. 7. 2. 2. 2. 3.
48 – 63	6. 6. 6. 7. 6. 6. 6. 7. 2. 2. 2. 3. 2. 2. 2. 3.
64 – 79	4. 6. 4. 7. 0. 2. 0. 3. 4. 6. 4. 7. 0. 2. 0. 3.
80 – 95	4. 4. 4. 7. 4. 6. 4. 7. 0. 2. 0. 3. 0. 2. 0. 3.
96 – 111	6. 6. 6. 7. 0. 0. 0. 1. 6. 6. 6. 7. 0. 0. 0. 1.
112 – 127	6. 6. 6. 7. 6. 6. 6. 7. 0. 0. 0. 1. 0. 0. 0. 1.
128 – 143	4. 4. 4. 5. 0. 0. 0. 1. 4. 4. 4. 5. 0. 0. 0. 1.
144 – 159	4. 4. 4. 5. 4. 4. 4. 5. 0. 0. 0. 1. 0. 0. 0. 1.
160 – 175	4. 4. 4. 5. 0. 0. 0. 1. 4. 4. 4. 5. 0. 0. 0. 1.
176 – 191	4. 4. 4. 5. 4. 4. 4. 5. 0. 0. 0. 1. 0. 0. 0. 1.
192 – 207	4. 6. 4. 7. 0. 2. 0. 3. 4. 6. 4. 7. 0. 2. 0. 3.
208 – 223	4. 6. 4. 7. 4. 6. 4. 7. 0. 2. 0. 3. 0. 2. 0. 3.
224 – 239	6. 6. 6. 7. 0. 0. 0. 1. 6. 6. 6. 7. 0. 0. 0. 1.
240 – 255	6. 6. 6. 7. 6. 6. 6. 7. 0. 0. 0. 1. 0. 0. 0. 1.

IC36
MB7052-TAM9
PROGRAMMED DATA

WORD (ADDRESS)	DATA OUTPUTS (IN HEXA-DECIMAL)
0 – 15	7. 7. 7. 7. 5. 5. 5. 5. 7. 7. 7. 7. 7. 1. 1. 3.
16 – 31	3. 3. 3. 3. 1. 1. 1. 1. 3. 3. 3. 3. 5. 5. 5. 7.
32 – 47	F. F. F. 7. D. D. D. 7. F. F. F. 7. 9. 9. 9. 3.
48 – 63	B. B. B. 3. 9. 9. 9. 3. B. B. B. 3. D. D. D. 7.
64 – 79	6. 6. 7. 7. 4. 4. 5. 7. 6. 6. 6. 7. 0. 0. 1. 3.
80 – 95	2. 2. 3. 3. 0. 0. 1. 3. 2. 2. 3. 3. 4. 4. 5. 7.
96 – 111	E. E. F. 7. C. C. D. 7. E. E. F. 7. 8. 8. 9. 3.
112 – 127	A. A. B. 3. 8. 8. 9. 3. A. A. B. 3. C. C. D. 7.
128 – 143	0. 0. 0. 0. 0. 0. 0. 0. 0. 0. 0. 0. 0. 0. 0. 0.
144 – 159	0. 0. 0. 0. 0. 0. 0. 0. 0. 0. 0. 0. 0. 0. 0. 0.
160 – 175	0. 0. 0. 0. 0. 0. 0. 0. 0. 0. 0. 0. 0. 0. 0. 0.
176 – 191	0. 0. 0. 0. 0. 0. 0. 0. 0. 0. 0. 0. 0. 0. 0. 0.
192 – 207	0. 0. 0. 0. 0. 0. 0. 0. 0. 0. 0. 0. 0. 0. 0. 0.
208 – 223	0. 0. 0. 0. 0. 0. 0. 0. 0. 0. 0. 0. 0. 0. 0. 0.
224 – 239	0. 0. 0. 0. 0. 0. 0. 0. 0. 0. 0. 0. 0. 0. 0. 0.
240 – 255	0. 0. 0. 0. 0. 0. 0. 0. 0. 0. 0. 0. 0. 0. 0. 0.

IC28
MB7056-TAME
PROGRAMMED DATA

WORD (ADDRESS)	DATA OUTPUTS (IN HEXA-DECIMAL)
0 – 15	C1. 04. F0. A8. E0. A0. E0. A2. C1. 04. F0. A8. E0. A0. E0. A2.
16 – 31	41. 04. F0. A8. E0. A0. E0. A2. C1. 04. F0. A8. E0. A0. E0. A2.

IC39
IM5600-TAM2
PROGRAMMED DATA

WORD (ADDRESS)	DATA OUTPUTS (IN HEXA-DECIMAL)
0 – 15	2F. 0E. 0D. 3F. 2F. 2F. 2F. 2F. 2F. 2F. 2F. 2F. 2F. 2F. 1D.
16 – 31	2F. 0E. 0D. 0C. 0B. 3F. 2F. 2F. 2F. 2F. 2F. 2F. 2F. 2F. 1B.

IC44
IM5600-TAM3
PROGRAMMED DATA

WORD (ADDRESS)	DATA OUTPUTS (IN HEXA-DECIMAL)
0 – 15	EF. CE. CD. 8C. 0B. 0A. FF. EF. EF. EF. EF. EF. EF. EF. 1A.
16 – 31	EF. CE. CD. 8C. 0B. 0A. 09. 08. 07. 06. FF. EF. EF. EF. 16.

●CHANGED

	UP TO # 20099	# 20101 & UP
IC3,48,49,50	SN74LS123	SN74LS123NS

TENSION-A TENSION-A

TENSION-A BOARD — *COMPONENT SIDE* —

FORMER
NTSC; # 20001 – 20499
PS ; # 20001 – 20399

NT BOARD
— CONPONENT SIDE —

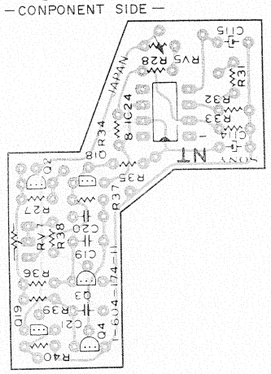

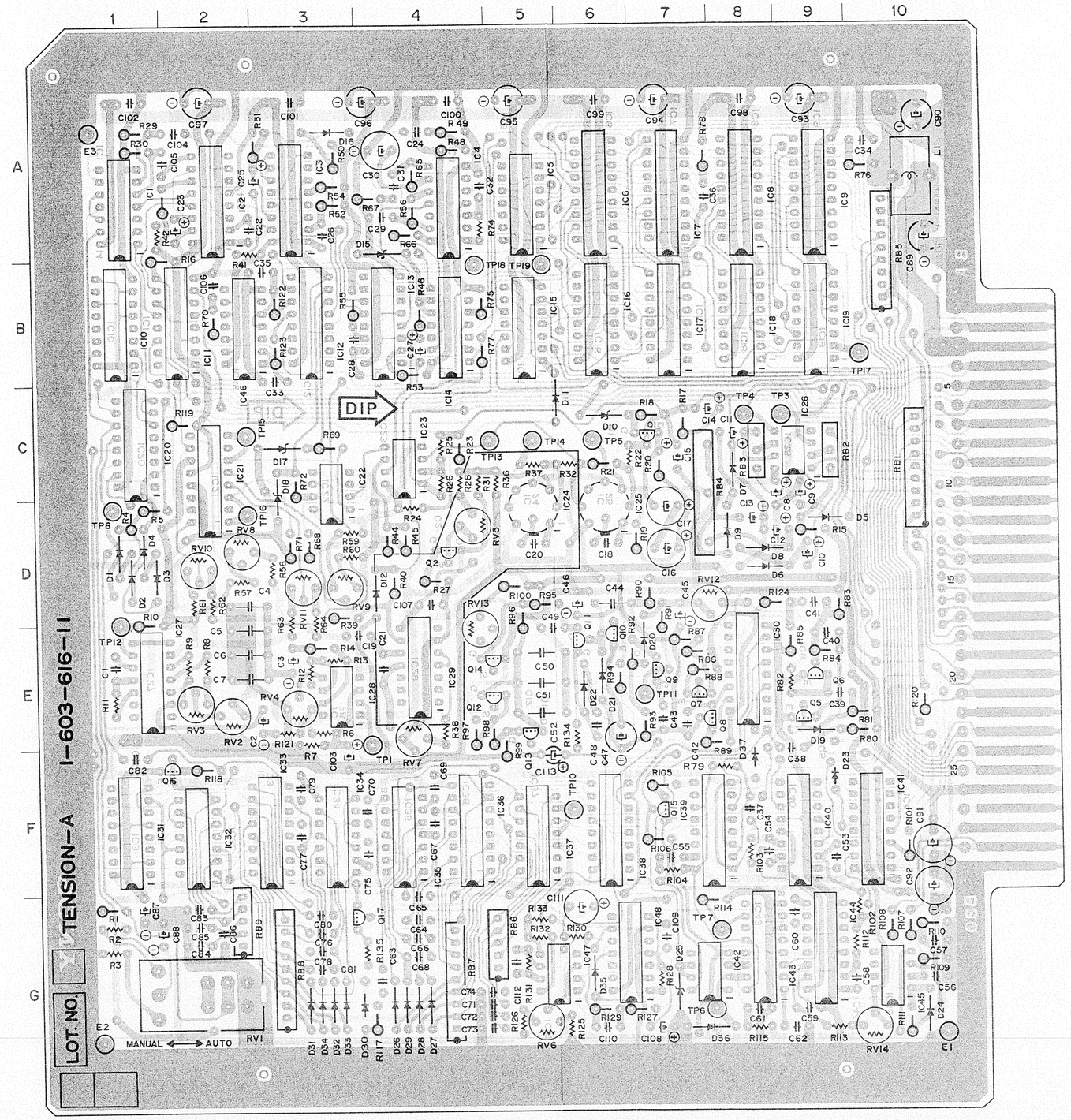

BVH-1100A (NTSC)
BVH-1100APS
TENSION-A BOARD
1-603-616-11

D1	D - 1
D2	D - 1
D3	D - 1
D4	D - 1
D5	D - 9
D6	D - 8
D7	C - 8
D8	D - 8
D9	D - 8
D10	C - 6
D11	C - 5
D12	D - 4
D15	A - 4
D16	A - 3
D17	C - 3
D18	C - 3
D19	E - 9
D20	E - 7
D21	E - 6
D22	E - 6
D23	F - 9
D24	G - 10
D25	G - 7
D26	G - 4
D27	G - 4
D28	G - 4
D29	G - 4
D30	G - 3
D31	G - 3
D32	G - 3
D33	G - 3
D34	G - 3
D35	G - 6
D36	G - 7
D37	F - 8
E1	G - 10
E2	G - 1
E3	A - 1
IC1	A - 1
IC2	A - 2
IC3	A - 3
IC4	A - 4
IC5	A - 5
IC6	A - 6
IC7	A - 7
IC8	A - 8
IC9	A - 9
IC10	B - 1
IC11	B - 2
IC12	B - 3
IC13	B - 4
IC14	B - 4
IC15	B - 5
IC16	B - 6
IC17	B - 7
IC18	B - 8
IC19	B - 9
IC20	C - 1
IC21	C - 2
IC22	C - 3
IC23	C - 4
IC24	D - 5
IC25	D - 6
IC26	D - 9
IC27	E - 1
IC28	E - 3
IC29	E - 4
IC30	E - 8
IC31	F - 1
IC32	F - 2
IC33	F - 3
IC34	F - 3
IC35	F - 4
IC36	F - 4
IC37	F - 5
IC38	F - 6
IC39	F - 7
IC40	F - 9
IC41	F - 10
IC42	G - 7
IC43	G - 8
IC44	G - 9
IC45	G - 10
IC46	B - 2
IC47	B - 2
IC48	G - 5
Q1	C - 7
Q2	D - 4
Q5	E - 9
Q6	E - 9
Q7	E - 7
Q8	E - 7
Q9	E - 7
Q10	E - 6
Q11	E - 6
Q12	E - 5
Q13	E - 5
Q14	E - 5
Q15	F - 7
Q16	F - 2
Q17	G - 3
RV1	G - 2
RV2	E - 2
RV3	E - 2
RV4	E - 3
RV5	D - 4
RV6	G - 5
RV7	E - 4
RV8	D - 2
RV9	D - 3
RV10	D - 2
RV11	D - 3
RV12	D - 7
RV13	D - 4
RV14	G - 10
TP1	E - 4
TP3	C - 9
TP4	G - 8
TP5	C - 6
TP6	G - 7
TP7	G - 7
TP8	D - 1
TP10	F - 5
TP11	E - 7
TP12	E - 1
TP13	C - 5
TP14	C - 5
TP15	C - 2
TP16	D - 2
TP17	B - 10
TP18	B - 4
TP19	B - 5

FORMER
NTSC; # 20001 – 20499
PS ; # 20001 – 20399

TENSION-A	TENSION-A

FORMER
NTSC; # 20001 – 20499
PS ; # 20001 – 20399

TENSION-A BOARD

Tension Servo

TC BOARD CN338

T2 TENSION DET-TRANS.

CAPSTAN-A,10A → CAPSTAN FWD IN 10 A

TENSION DET T (3) 4A

TENSION DET T (1) 5B

GND 1 6B

TENSION DET T 2B

CAPSTAN-A,20A

Δf VOLTAGE IN 20 B

TENSION DET T (2) 4B

VIDEO LOGIC, 9A → 1-HEAD DET IN 10 B

SYS-2,27A → REC (L) IN 11 B

SYS-2,17B → SPEED COMMAND IN 7B

CAPSTAN-A,19A → REF 6V IN 9 B

SYNC PULSE,17B → PB H IN 9A

VIDEO LOGIC ,19A → SKEW SAMPLE IN 8A

VIDEO LOGIC ,20A → EE(VIDEO) IN 21 B

CAPSTAN-A,19B → CAPSTAN CLOCK IN 18 A

CAPSTAN-A,24B → TENSION CLOCK(21)IN 20 A

SYS-3A,11A → 1/1 IN 6A

CAPSTAN-A,25B → CAPSTAN FG P IN 21 A

MPA-A,CN363-1 → TENSION FG (X) IN 29 A

MPA-A,CN363-2 → TENSION FG (Y) IN 30 A

+12V IN 25 AB

GND 26 AB

-12V IN 28 AB

CAPSTAN-A,20B → TRANSIENT IN 18 B

CAPSTAN-A,17A → PLAY IN 8B

SYS-2,7A → STANDBY IN 12 B

+5V IN 3 AB

GND 1 AB

IC27 ICL8038BCPD 2.5KHz OSC

IC28 μPC4557C

TENSION ERROR DETECTOR

IC26 TL082CP

TENSION ERROR AMP

Q1 2SK43

IC25 LM308H

IC23 TL082CP

Q2 2SK43-2 REV. TEN. ADJ.

Q18 2SC1636

Q19 2SC403C

Q3 2SC689 TENSION REF. OSC

Q4 2SC689

IC24 HA1774IGS BUFFER

NT BOARD

SKEW AUTO/NOR SW

MANUAL

AUTO

VARIABLE DELAY

IC30 MC14053BCP

RAMP GENERATOR

Q7 2SA844

Q8 2SA844

SAMPLE & HOLD

Q9 2SK43-2

6V CLAMP

Q10 2SC1364

Q11 2SK43-2

LIMITER

Q12 2SK43-2

Q13 2SK43-2

Q14 2SK43-2

SKEW ERROR DETECTOR

Q5 2SC1364

Q6 2SC1364

IC39 HD14538BP PB H DELAY

IC40 HD14538BP

IC39 HD14538BP

Q15 2SA844

PHASE MODULATOR

IC36 TC4044BP

IC37 μPC339C

IC38 MC14053BCP

IC48 VFG-IC F/V CONVERTOR(JOG,SHUTTLE MODE)

IC47 TL082CP

Q17 2SA844

T/V CONVERTOR(NORMAL MODE)

IC42 TL082CP

IC43 MC14053BCP

IC45 TL082CP

IC44 HD14538BCP

IC33 TC4044BP

IC31 MC14053BCP

IC32 μPC339C

Q16 2SA844

UPPER/LOWER TENSION DETECTOR (JOG,SHUTTLE,PINCH ON MODE)

IC21 TL191CN

IC22 TL082CP

IC3 HD14538BP TENSION CONTROLLER

IC12 MB7052-T2CA

IC13 HD14538BP

IC2 HD14538BP CAPSTAN SPEED TRANSITION DETECTOR

TENSION PWM

IC8 MB7054-T6CA

IC18 SN74LS669N

IC19 SN74LS669N

IC9 MB7054-T7CA

CAPSTAN PWM

IC6 MB7054-T6CA

IC16 SN74LS669N

IC17 SN74LS669N

IC7 MB7054-T7CA

IC5 SN74LS393N PWM CARRIER GEN

TP1 TP3 TP4 TP5 TP6 TP7 TP8 TP10 TP11 TP12 TP13 TP15 TP16 TP17 TP18 TP19

21-197 (5/7)

21-197 (6/7)

TENSION-A

FORMER
NTSC; # 20001 – 20499
PS ; # 20001 – 20399

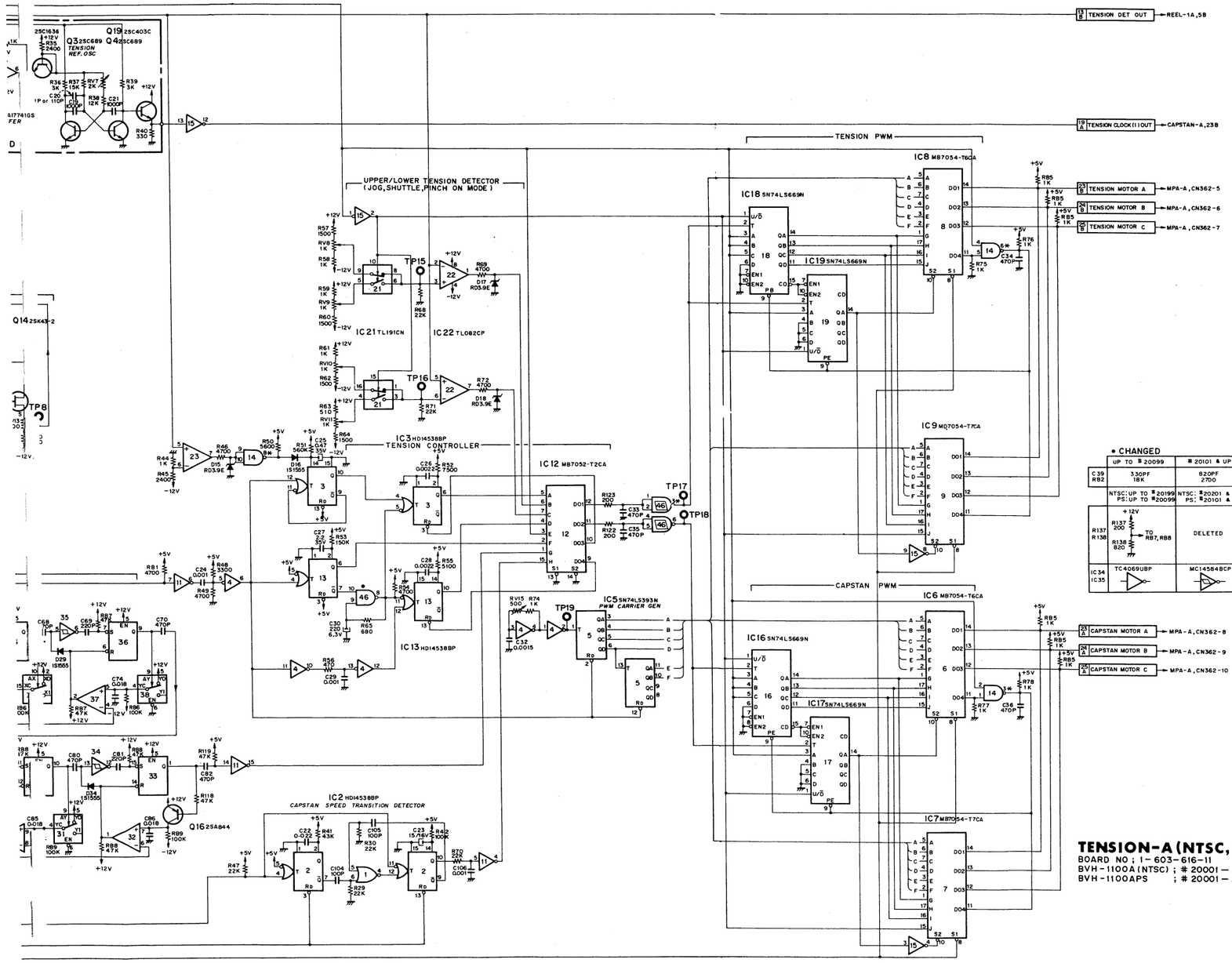

TENSION-A (NTSC,PS)
BOARD NO ; 1-603-616-11
BVH-1100A (NTSC) ; # 20001 – 20499
BVH-1100APS ; # 20001 – 20399

REF. NO.	TYPE	PIN NO. +12V	–12V	+5V	–5V	GND
IC1	TC4001BP (CD4001BE)			14		7
2	HD14538BP			16		8
3	HD14538BP			16		8
4	SN74LS14N			14		7
5	SN74LS393N			14		7
6	MB7054-T6CA			18		9
7	MB7054-T7CA			18		9
8	MB7054-T6CA			18		9
9	MB7054-T7CA			18		9
10	TC5020BP	1, 16				8
11	TC4049BP (CD4049BE)			16		8
12	MB7052-T2CA			16		8
13	HD14538BP			16		8
14	SN74LS03N			14		7
15	SN7404N			14		7
16	SN74LS669N			16		8
17	SN74LS669N			16		8
18	SN74LS669N			16		8
19	SN74LS669N			16		8
20	HD14053BP (CD4053BE)	16				7, 8
21	TL191CN	11	14	12		13
22	TL082CP	8	4			
23	TL082CP	8	4			
24	HA17741GS	7	4			
25	LM308H	7	4			
26	TL082CP	8	4			
27	ICL8038BCPD	6	11			
28	μPC4557C	8	4			
30	HD14053BP (CD4053BE)	16				8
31	HD14053BP (CD4053BE)	16				8
32	μPC339C	3				
33	TC4044BP	16				8
34	MC14584BCP	14				7
35	MC14584BCP	14				7
36	TC4044BP	16				8
37	μPC339C	3				
38	HD14053BP (CD4053BE)	16				8
39	HD14538BP	16				8
40	HD14538BP	16				8
41	TC5020BP	1, 16				8
42	TL082CP	8	4			
43	HD14053BP (CD4053BE)	16				8
44	HD14538BP			16		8
45	TL082CP	8	4			
46	SN74LS132N			14		7
47	TL082CP	8	4			
48	VFO-1C			14		6, 9

• CHANGED

	UP TO # 20099	# 20101 & UP
C39 R82	330PF 18K	820PF 2700
	NTSC: UP TO # 20199 PS: UP TO # 20099	NTSC: #20201 & UP PS: #20101 & UP
R137 R138	R137 200 TO R138 820 R87, R88	DELETED
IC34 IC35	TC4069UBP	MC14584BCP

• CHANGED

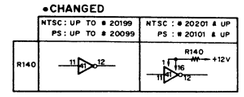

• CHANGED

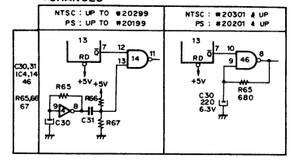

IC6, IC8
MB7054-T6CA
PROGRAMMED DATA

WORD (ADDRESS)	DATA OUTPUTS (IN HEXADECIMAL)
0 – 15	F. E. E. E. E. E. E. E. E. E. E. E. E. E. E. E.
16 – 31	E. E. E. E. E. E. E. E. E. E. E. E. E. E. E. E.
32 – 47	E. E. E. E. E. E. E. E. E. E. E. E. E. E. E. E.
48 – 63	8. 8. 8. 8. 8. 8. 8. 8. 8. 8. 8. 8. 8. 8. 8. 8.
64 – 79	7. 7. 6. 6. 6. 6. 6. 6. 6. 6. 6. 6. 6. 6. 6. 6.
80 – 95	6. 6. 6. 6. 6. 6. 6. 6. 6. 6. 6. 6. 6. 6. 6. 6.
96 – 111	6. 6. 6. 6. 6. 6. 6. 6. 4. 4. 4. 4. 4. 4. 4. 4.
112 – 127	4. 4. 4. 4. 4. 4. 0. 0. 0. 0. 0. 0. 0. 0. 0. 0.
128 – 143	7. 7. 7. 7. 7. 6. 6. 6. 6. 6. 6. 6. 6. 6. 6. 6.
144 – 159	6. 6. 6. 6. 6. 6. 6. 6. 6. 6. 6. 6. 6. 6. 6. 6.
160 – 175	4. 4. 4. 4. 4. 4. 4. 4. 4. 4. 4. 4. 4. 4. 4. 4.
176 – 191	4. 4. 4. 4. 4. 4. 4. 4. 4. 4. 0. 0. 0. 0. 0. 0.
192 – 207	7. 7. 7. 7. 7. 7. 7. 7. 7. 7. 6. 6. 6. 6. 6. 6.
208 – 223	6. 6. 6. 6. 6. 6. 6. 6. 4. 4. 4. 4. 4. 4. 4. 4.
224 – 239	4. 4. 4. 4. 4. 4. 4. 4. 4. 4. 4. 4. 4. 4. 4. 4.
240 – 255	4. 4. 4. 4. 4. 4. 4. 4. 4. 4. 4. 4. 4. 4. 0. 0.
256 – 271	7. 7. 7. 7. 7. 7. 7. 7. 7. 7. 7. 7. 7. 7. 7. 7.
272 – 287	4. 4. 4. 4. 4. 4. 4. 4. 4. 4. 4. 4. 4. 4. 4. 4.
288 – 303	4. 4. 4. 4. 4. 4. 4. 4. 4. 4. 4. 4. 4. 4. 4. 4.
304 – 319	4. 4. 4. 4. 4. 4. 4. 4. 4. 4. 4. 4. 4. 4. 0. 0.
320 – 335	7. 7. 7. 7. 7. 7. 7. 7. 7. 7. 5. 5. 5. 5. 5. 5.
336 – 351	5. 5. 5. 5. 5. 5. 5. 5. 4. 4. 4. 4. 4. 4. 4. 4.
352 – 367	4. 4. 4. 4. 4. 4. 4. 4. 4. 4. 4. 4. 4. 4. 4. 4.
368 – 383	4. 4. 4. 4. 4. 4. 4. 4. 4. 4. 4. 4. 4. 4. 0. 0.
384 – 399	7. 7. 7. 7. 7. 5. 5. 5. 5. 5. 5. 5. 5. 5. 5. 5.
400 – 415	5. 5. 5. 5. 5. 5. 5. 5. 5. 5. 5. 5. 5. 5. 5. 5.
416 – 431	4. 4. 4. 4. 4. 4. 4. 4. 4. 4. 4. 4. 4. 4. 4. 4.
432 – 447	4. 4. 4. 4. 4. 4. 4. 4. 4. 4. 0. 0. 0. 0. 0. 0.
448 – 463	7. 7. 5. 5. 5. 5. 5. 5. 5. 5. 5. 5. 5. 5. 5. 5.
464 – 479	5. 5. 5. 5. 5. 5. 5. 5. 5. 5. 5. 5. 5. 5. 5. 5.
480 – 495	5. 5. 5. 5. 5. 5. 5. 5. 4. 4. 4. 4. 4. 4. 4. 4.
496 – 511	4. 4. 4. 4. 4. 4. 0. 0. 0. 0. 0. 0. 0. 0. 0. 0.
512 – 527	7. 5. 5. 5. 5. 5. 5. 5. 5. 5. 5. 5. 5. 5. 5. 5.
528 – 543	5. 5. 5. 5. 5. 5. 5. 5. 5. 5. 5. 5. 5. 5. 5. 5.
544 – 559	5. 5. 5. 5. 5. 5. 5. 5. 5. 5. 5. 5. 5. 5. 5. 5.
560 – 575	0. 0. 0. 0. 0. 0. 0. 0. 0. 0. 0. 0. 0. 0. 0. 0.
576 – 591	7. 7. 5. 5. 5. 5. 5. 5. 5. 5. 5. 5. 5. 5. 5. 5.
592 – 607	5. 5. 5. 5. 5. 5. 5. 5. 5. 5. 5. 5. 5. 5. 5. 5.
608 – 623	5. 5. 5. 5. 5. 5. 5. 5. 5. 5. 1. 1. 1. 1. 1. 1.
624 – 639	1. 1. 1. 1. 1. 1. 1. 0. 0. 0. 0. 0. 0. 0. 0. 0.
640 – 655	7. 7. 7. 7. 7. 5. 5. 5. 5. 5. 5. 5. 5. 5. 5. 5.
656 – 671	5. 5. 5. 5. 5. 5. 5. 5. 5. 5. 5. 5. 5. 5. 5. 5.
672 – 687	1. 1. 1. 1. 1. 1. 1. 1. 1. 1. 1. 1. 1. 1. 1. 1.
688 – 703	1. 1. 1. 1. 1. 1. 1. 1. 1. 1. 1. 1. 0. 0. 0. 0.
704 – 719	7. 7. 7. 7. 7. 7. 7. 7. 7. 7. 5. 5. 5. 5. 5. 5.
720 – 735	5. 5. 5. 5. 5. 5. 5. 5. 1. 1. 1. 1. 1. 1. 1. 1.
736 – 751	1. 1. 1. 1. 1. 1. 1. 1. 1. 1. 1. 1. 1. 1. 1. 1.
752 – 767	1. 1. 1. 1. 1. 1. 1. 1. 1. 1. 1. 1. 1. 1. 0. 0.
768 – 783	7. 7. 7. 7. 7. 7. 7. 7. 7. 7. 7. 7. 7. 7. 7. 7.
784 – 799	1. 1. 1. 1. 1. 1. 1. 1. 1. 1. 1. 1. 1. 1. 1. 1.
800 – 815	1. 1. 1. 1. 1. 1. 1. 1. 1. 1. 1. 1. 1. 1. 1. 1.
816 – 831	1. 1. 1. 1. 1. 1. 1. 1. 1. 1. 1. 1. 1. 1. 1. 0.
832 – 847	7. 7. 7. 7. 7. 7. 7. 7. 3. 3. 3. 3. 3. 3. 3. 3.
848 – 863	3. 3. 3. 3. 3. 3. 3. 3. 1. 1. 1. 1. 1. 1. 1. 1.
864 – 879	1. 1. 1. 1. 1. 1. 1. 1. 1. 1. 1. 1. 1. 1. 1. 1.
880 – 895	1. 1. 1. 1. 1. 1. 1. 1. 1. 1. 1. 1. 1. 1. 1. 0.
896 – 911	7. 7. 7. 7. 7. 3. 3. 3. 3. 3. 3. 3. 3. 3. 3. 3.
912 – 927	3. 3. 3. 3. 3. 3. 3. 3. 3. 3. 3. 3. 3. 3. 3. 3.
928 – 943	1. 1. 1. 1. 1. 1. 1. 1. 1. 1. 1. 1. 1. 1. 1. 1.
944 – 959	1. 1. 1. 1. 1. 1. 1. 1. 1. 1. 1. 1. 0. 0. 0. 0.
960 – 975	7. 7. 3. 3. 3. 3. 3. 3. 3. 3. 3. 3. 3. 3. 3. 3.
976 – 991	3. 3. 3. 3. 3. 3. 3. 3. 3. 3. 3. 3. 3. 3. 3. 3.
992 – 1007	3. 3. 3. 3. 3. 3. 3. 1. 1. 1. 1. 1. 1. 1. 1. 1.
1008 – 1023	1. 1. 1. 1. 1. 1. 0. 0. 0. 0. 0. 0. 0. 0. 0. 0.

IC7, IC9
MB7054-T7CA
PROGRAMMED DATA

WORD (ADDRESS)	DATA OUTPUTS (IN HEXADECIMAL)
0 – 15	F. B. B. B. B. B. B. B. B. B. B. B. B. B. B. B.
16 – 31	B. B. B. B. B. B. B. B. B. B. B. B. B. B. B. B.
32 – 47	B. B. B. B. B. B. B. B. B. B. B. B. B. B. B. B.
48 – 63	8. 8. 8. 8. 8. 8. 8. 8. 8. 8. 8. 8. 8. 8. 8. 8.
64 – 79	F. F. B. B. B. B. B. B. B. B. B. B. B. B. B. B.
80 – 95	B. B. B. B. B. B. B. B. B. B. B. B. B. B. B. B.
96 – 111	B. B. B. B. B. B. B. B. A. A. A. A. A. A. A. A.
112 – 127	A. A. A. A. A. A. 8. 8. 8. 8. 8. 8. 8. 8. 8. 8.
128 – 143	F. F. F. F. F. B. B. B. B. B. B. B. B. B. B. B.
144 – 159	B. B. B. B. B. B. B. B. B. B. B. B. B. B. B. B.
160 – 175	A. A. A. A. A. A. A. A. A. A. A. A. A. A. A. A.
176 – 191	A. A. A. A. A. A. A. A. A. A. 8. 8. 8. 8. 8. 8.
192 – 207	F. F. F. F. F. F. F. F. F. F. B. B. B. B. B. B.
208 – 223	B. B. B. B. B. B. B. B. A. A. A. A. A. A. A. A.
224 – 239	A. A. A. A. A. A. A. A. A. A. A. A. A. A. A. A.
240 – 255	A. A. A. A. A. A. A. A. A. A. A. A. A. A. 8. 8.
256 – 271	F. F. F. F. F. F. F. F. F. F. F. F. F. F. F. F.
272 – 287	A. A. A. A. A. A. A. A. A. A. A. A. A. A. A. A.
288 – 303	A. A. A. A. A. A. A. A. A. A. A. A. A. A. A. A.
304 – 319	A. A. A. A. A. A. A. A. A. A. A. A. A. A. 8. 8.
320 – 335	F. F. F. F. F. F. F. F. F. F. E. E. E. E. E. E.
336 – 351	E. E. E. E. E. E. E. E. A. A. A. A. A. A. A. A.
352 – 367	A. A. A. A. A. A. A. A. A. A. A. A. A. A. A. A.
368 – 383	A. A. A. A. A. A. A. A. A. A. A. A. A. A. 8. 8.
384 – 399	F. F. F. F. F. E. E. E. E. E. E. E. E. E. E. E.
400 – 415	E. E. E. E. E. E. E. E. E. E. E. E. E. E. E. E.
416 – 431	A. A. A. A. A. A. A. A. A. A. A. A. A. A. A. A.
432 – 447	A. A. A. A. A. A. A. A. A. A. A. A. 8. 8. 8. 8.
448 – 463	F. F. E. E. E. E. E. E. E. E. E. E. E. E. E. E.
464 – 479	E. E. E. E. E. E. E. E. E. E. E. E. E. E. E. E.
480 – 495	E. E. E. E. E. E. E. E. A. A. A. A. A. A. A. A.
496 – 511	A. A. A. A. A. A. 8. 8. 8. 8. 8. 8. 8. 8. 8. 8.
512 – 527	F. B. B. B. B. B. B. B. B. B. B. B. B. B. B. B.
528 – 543	B. B. B. B. B. B. B. B. B. B. B. B. B. B. B. B.
544 – 559	B. B. B. B. B. B. B. B. B. B. B. B. B. B. B. B.
560 – 575	8. 8. 8. 8. 8. 8. 8. 8. 8. 8. 8. 8. 8. 8. 8. 8.
576 – 591	F. F. B. B. B. B. B. B. B. B. B. B. B. B. B. B.
592 – 607	B. B. B. B. B. B. B. B. B. B. B. B. B. B. B. B.
608 – 623	B. B. B. B. B. B. B. B. A. A. A. A. A. A. A. A.
624 – 639	A. A. A. A. A. A. 8. 8. 8. 8. 8. 8. 8. 8. 8. 8.
640 – 655	F. F. F. F. F. B. B. B. B. B. B. B. B. B. B. B.
656 – 671	B. B. B. B. B. B. B. B. B. B. B. B. B. B. B. B.
672 – 687	A. A. A. A. A. A. A. A. A. A. A. A. A. A. A. A.
688 – 703	A. A. A. A. A. A. A. A. A. A. 8. 8. 8. 8. 8. 8.
704 – 719	F. F. F. F. F. F. F. F. F. F. B. B. B. B. B. B.
720 – 735	E. E. E. E. E. E. E. E. A. A. A. A. A. A. A. A.
736 – 751	A. A. A. A. A. A. A. A. A. A. A. A. A. A. A. A.
752 – 767	A. A. A. A. A. A. A. A. A. A. A. A. A. A. 8. 8.
768 – 783	F. F. F. F. F. F. F. F. F. F. F. F. F. F. F. F.
784 – 799	A. A. A. A. A. A. A. A. A. A. A. A. A. A. A. A.
800 – 815	A. A. A. A. A. A. A. A. A. A. A. A. A. A. A. A.
816 – 831	A. A. A. A. A. A. A. A. A. A. A. A. A. A. A. 8.
832 – 847	F. F. F. F. F. F. F. F. E. E. E. E. E. E. E. E.
848 – 863	E. E. E. E. E. E. E. E. A. A. A. A. A. A. A. A.
864 – 879	A. A. A. A. A. A. A. A. A. A. A. A. A. A. A. A.
880 – 895	A. A. A. A. A. A. A. A. A. A. A. A. A. A. 8. 8.
896 – 911	F. F. F. F. F. E. E. E. E. E. E. E. E. E. E. E.
912 – 927	E. E. E. E. E. E. E. E. E. E. E. E. E. E. E. E.
928 – 943	A. A. A. A. A. A. A. A. A. A. A. A. A. A. A. A.
944 – 959	A. A. A. A. A. A. A. A. A. A. A. A. 8. 8. 8. 8.
960 – 975	7. 7. 6. 6. 6. 6. 6. 6. 6. 6. 6. 6. 6. 6. 6. 6.
976 – 991	6. 6. 6. 6. 6. 6. 6. 6. 6. 6. 6. 6. 6. 6. 6. 6.
992 – 1007	6. 6. 6. 6. 6. 6. 6. 6. 2. 2. 2. 2. 2. 2. 2. 2.
1008 – 1023	2. 2. 2. 2. 2. 2. 0. 0. 0. 0. 0. 0. 0. 0. 0. 0.

TENSION-A	TENSION-A

TENSION-A BOARD — *COMPONENT SIDE* —

NEW
NTSC; # 20501 –
PS ; # 20401 –

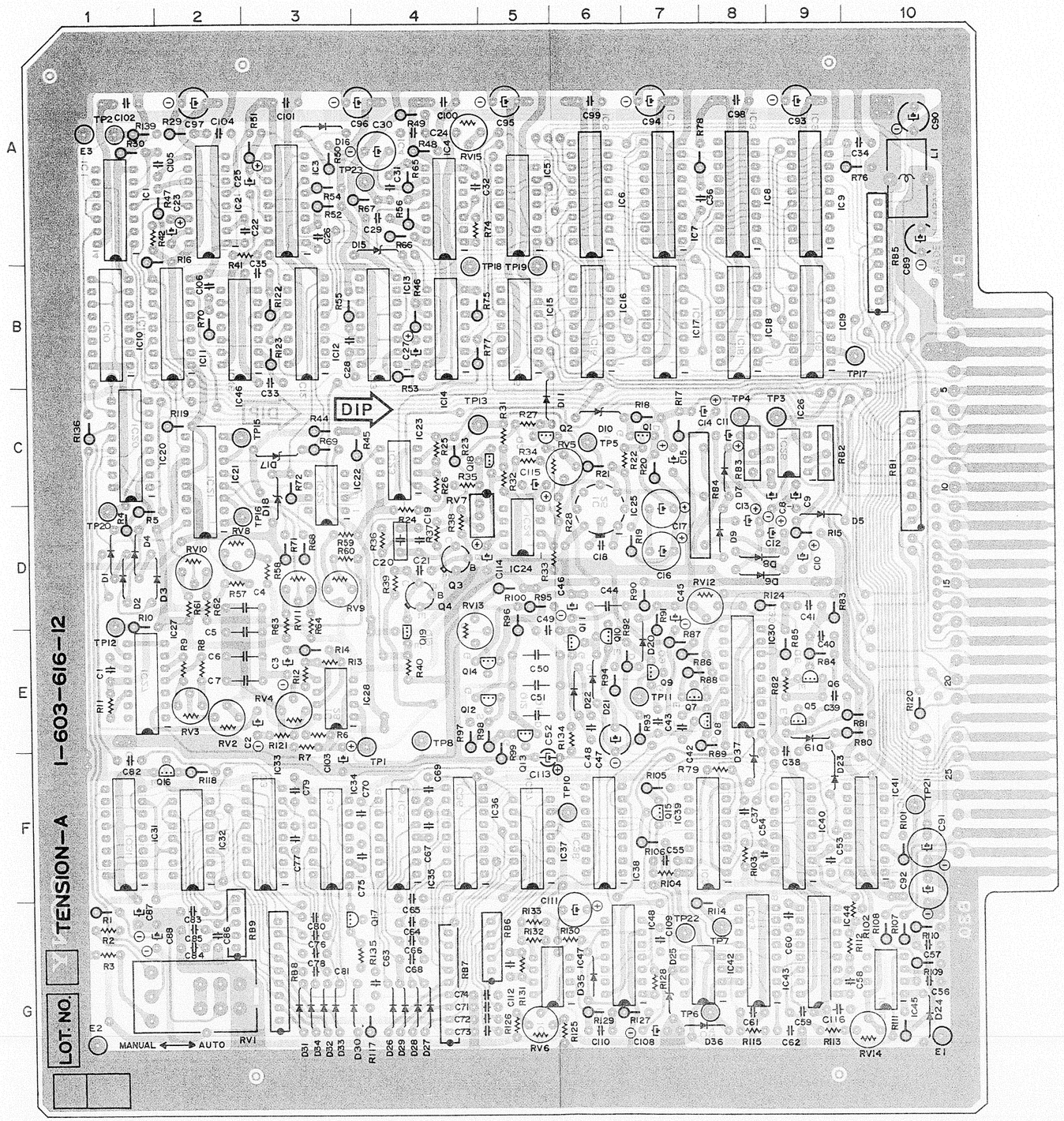

NEW
NTSC; # 20501 –
PS ; # 20401 –

BVH-1100A (NTSC)
BVH-1100APS
BVH-1100APM
TENSION-A BOARD
1-603-616-12

D1	D - 1	Q7	E - 7		
D2	D - 1	Q8	E - 7		
D3	D - 1	Q9	E - 7		
D4	D - 1	Q10	E - 6		
D5	D - 9	Q11	E - 6		
D6	D - 8	Q12	E - 5		
D7	C - 8	Q13	E - 5		
D8	D - 8	Q14	E - 5		
D9	D - 8	Q15	F - 7		
D10	C - 6	Q16	F - 2		
D11	C - 5	Q17	G - 3		
D15	A - 4	Q18	C - 5		
D16	A - 3	Q19	E - 4		
D17	C - 3				
D18	C - 3	RV1	G - 2		
D19	E - 9	RV2	E - 2		
D20	E - 7	RV3	E - 2		
D21	E - 6	RV4	E - 3		
D22	E - 6	RV5	C - 6		
D23	F - 9	RV6	G - 5		
D24	G - 10	RV7	C - 4		
D25	G - 7	RV8	D - 2		
D26	G - 4	RV9	D - 3		
D27	G - 4	RV10	D - 2		
D28	G - 4	RV11	D - 3		
D29	G - 4	RV12	D - 7		
D30	G - 3	RV13	D - 4		
D31	G - 3	RV14	G - 10		
D32	G - 3	RV15	A - 4		
D33	G - 3				
D34	G - 3	TP1	E - 4		
D35	G - 6	TP2	A - 1		
D36	G - 7	TP3	C - 9		
D37	F - 8	TP4	C - 8		
		TP5	C - 6		
E1	G - 10	TP6	G - 7		
E2	G - 1	TP7	G - 8		
E3	A - 1	TP8	E - 4		
		TP10	F - 6		
IC1	A - 1	TP11	E - 7		
IC2	A - 2	TP12	E - 1		
IC3	A - 3	TP13	C - 5		
IC4	A - 4	TP15	C - 2		
IC5	A - 5	TP16	D - 2		
IC6	A - 6	TP17	B - 10		
IC7	A - 7	TP18	B - 4		
IC8	A - 8	TP19	B - 5		
IC9	A - 9	TP20	D - 1		
IC10	B - 1	TP21	F - 10		
IC11	B - 2	TP22	G - 7		
IC12	B - 3	TP23	A - 4		
IC13	B - 4				
IC14	B - 4				
IC15	B - 5				
IC16	B - 6				
IC17	B - 7				
IC18	B - 8				
IC19	B - 9				
IC20	C - 1				
IC21	C - 2				
IC22	C - 3				
IC23	C - 4				
IC24	D - 5				
IC25	D - 6				
IC26	C - 9				
IC27	E - 1				
IC28	E - 3				
IC30	E - 8				
IC31	F - 1				
IC32	F - 2				
IC33	F - 3				
IC34	F - 3				
IC35	F - 4				
IC36	F - 4				
IC37	F - 5				
IC38	F - 6				
IC39	F - 7				
IC40	F - 9				
IC41	F - 10				
IC42	G - 7				
IC43	G - 8				
IC44	G - 9				
IC45	G - 10				
IC46	B - 2				
IC47	G - 5				
IC48	G - 6				
Q1	C - 7				
Q2	C - 5				
Q3	D - 4				
Q4	D - 4				
Q5	E - 9				
Q6	E - 9				

TENSION-A TENSION-A

NEW
NTSC; # 20501 –
PS ; # 20401 –

TENSION-A BOARD

Tension Servo

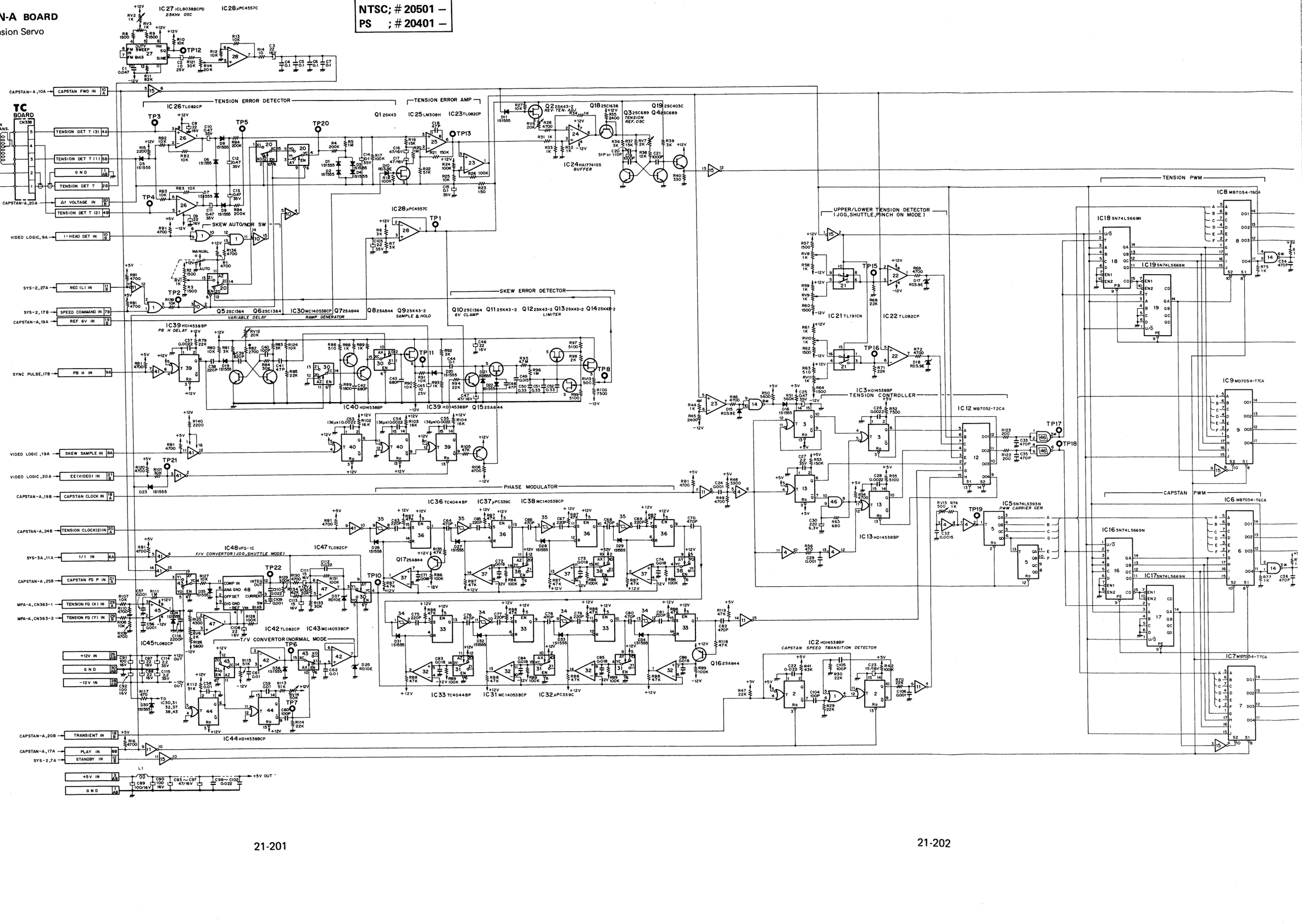

TENSION-A

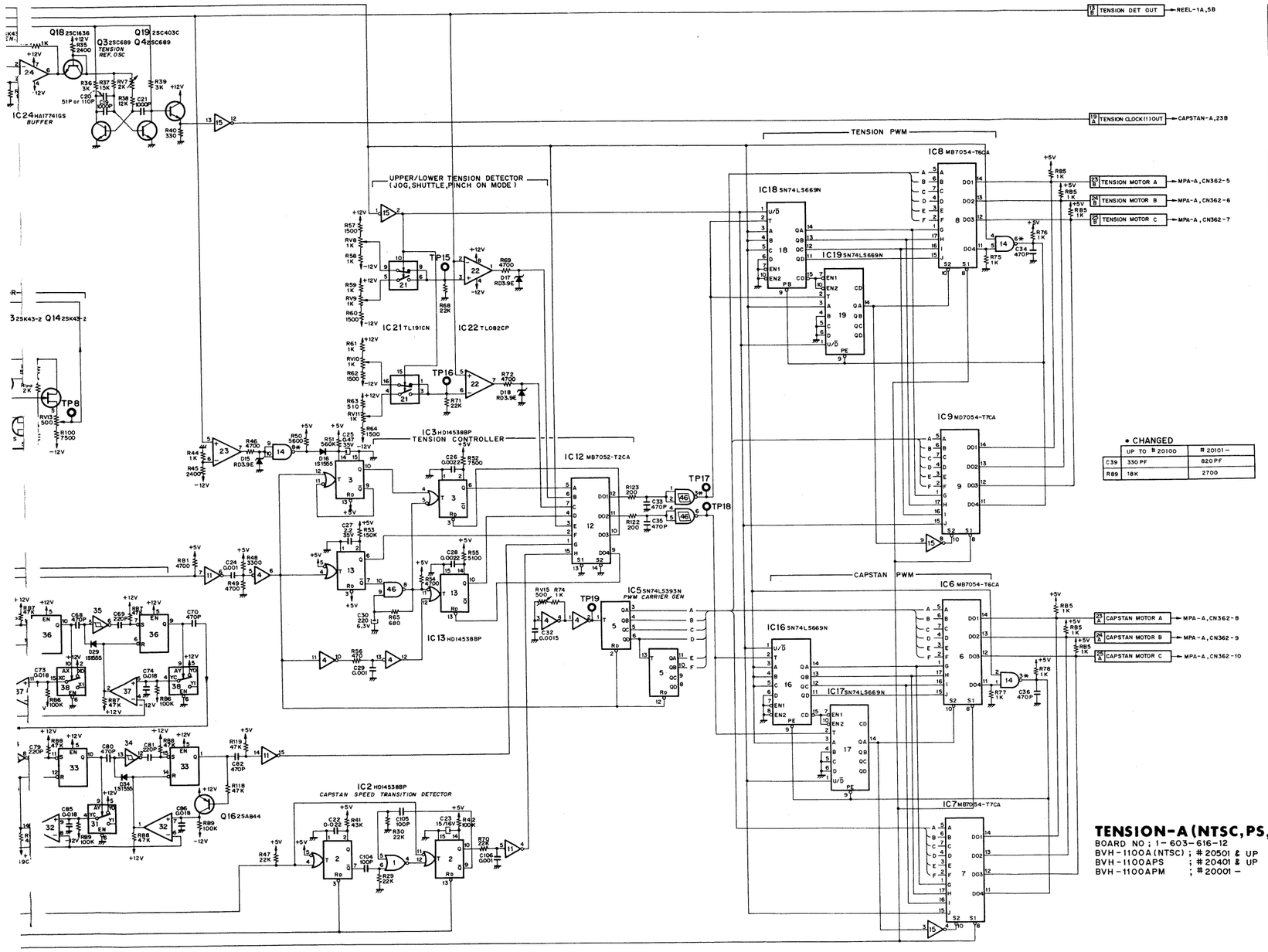

TENSION-A (NTSC, PS, PM)
BOARD NO ; 1-603-616-12
BVH-1100A (NTSC) ; # 20501 & UP
BVH-1100APS ; # 20401 & UP
BVH-1100APM ; # 20001 –

REF. NO.	TYPE	PIN NO. +12V	−12V	+5V	−5V	GND
IC1	TC4001BP (CD4001BE)			14		7
2	HD14538BP			16		8
3	HD14538BP			16		8
4	SN74LS14N			14		7
5	SN74LS393N			14		7
6	MB7054-T6CA			18		9
7	MB7054-T7CA			18		9
8	MB7054-T6CA			18		9
9	MB7054-T7CA			18		9
10	TC5020BP	1, 16				8
11	TC4049BP (CD4049BE)			16		8
12	MB7052-T2CA			16		8
13	HD14538BP			16		8
14	SN74LS03N			14		7
15	SN7404N			14		7
16	SN74LS669N			16		8
17	SN74LS669N			16		8
18	SN74LS669N			16		8
19	SN74LS669N			16		8
20	HD14053BP (CD4053BE)	16				7, 8
21	TL191CN	11	14	12		13
22	TL082CP	8	4			
23	TL082CP	8	4			
24	HA17741GS	7	4			
25	LM308H	7	4			
26	TL082CP	8	4			
27	ICL8038BCPD	6	11			
28	μPC4557C	8	4			
30	HD14053BP (CD4053BE)	16				8
31	HD14053BP (CD4053BE)	16				8
32	μPC339C	3				
33	TC4044BP	16				8
34	MC14584BCP	14				7
35	MC14584BCP	14				7
36	TC4044BP	16				8
37	μPC339C	3				
38	HD14053BP (CD4053BE)	16				8
39	HD14538BP	16				8
40	HD14538BP	16				8
41	TC5020BP	1, 16				8
42	TL082CP	8	4			
43	HD14053BP (CD4053BE)	16		16		8
44	HD14538BP			16		8
45	TL082CP	8	4			
46	SN74LS132N			14		7
47	TL082CP	8	4			
48	VFQ-1C			14		6, 9

• CHANGED

	UP TO # 20100	# 20101 –
C39	330 PF	820 PF
R89	18K	2700

NEW
NTSC; # 20501 –
PS ; # 20401 –

IC12
MB7052-T2CA
PROGRAMMED DATA

WORD (ADDRESS)	DATA OUTPUTS (IN HEXADECIMAL)
0 – 15	7, 7, F, F, F, F, F, F, 7, 7, F, D, F, E, F, F,
16 – 31	7, 7, F, F, F, F, F, F, 7, 7, F, E, F, D, F, F,
32 – 47	F, F, F, F, F, F, F, F, C, C, C, D, C, E, F, F,
48 – 63	F, F, F, F, F, F, F, F, C, C, C, E, C, D, F, F,
64 – 79	7, 7, F, F, F, F, F, F, 7, 7, F, D, F, E, F, F,
80 – 95	7, 7, F, F, F, F, F, F, 7, 7, F, E, F, D, F, F,
96 – 111	F, F, F, F, F, F, F, F, C, C, C, D, C, E, F, F,
112 – 127	F, F, F, F, F, F, F, F, C, C, C, E, C, D, F, F,
128 – 143	7, 7, F, F, F, F, F, F, 7, 7, F, D, F, E, F, F,
144 – 159	7, 7, F, F, F, F, F, F, 7, 7, F, E, F, D, F, F,
160 – 175	F, F, F, F, F, F, F, F, D, D, D, D, D, D, D, D,
176 – 191	F, F, F, F, F, F, F, F, E, E, E, E, E, E, E, E,
192 – 207	F, F, F, F, F, F, F, F, F, F, D, F, E, F, F, F,
208 – 223	F, F, F, F, F, F, F, F, F, F, E, F, D, F, F, F,
224 – 239	E, E, E, E, E, E, E, E, C, C, C, C, C, C, C, C,
240 – 255	D, D, D, D, D, D, D, D, C, C, C, C, C, C, C, C,

IC6, IC8
MB7054-T6CA
PROGRAMMED DATA

WORD (ADDRESS)	DATA OUTPUTS (IN HEXADECIMAL)
0 – 15	F, E, E, E, E, E, E, E, E, E, E, E, E, E, E, E,
16 – 31	E, E, E, E, E, E, E, E, E, E, E, E, E, E, E, E,
32 – 47	E, E, E, E, E, E, E, E, E, E, E, E, E, E, E, E,
48 – 63	8, 8, 8, 8, 8, 8, 8, 8, 8, 8, 8, 8, 8, 8, 8, 8,
64 – 79	7, 7, 6, 6, 6, 6, 6, 6, 6, 6, 6, 6, 6, 6, 6, 6,
80 – 95	6, 6, 6, 6, 6, 6, 6, 6, 6, 6, 6, 6, 6, 6, 6, 6,
96 – 111	6, 6, 6, 6, 6, 6, 6, 6, 4, 4, 4, 4, 4, 4, 4, 4,
112 – 127	4, 4, 4, 4, 4, 4, 4, 4, 0, 0, 0, 0, 0, 0, 0, 0,
128 – 143	7, 7, 7, 7, 7, 7, 6, 6, 6, 6, 6, 6, 6, 6, 6, 6,
144 – 159	6, 6, 6, 6, 6, 6, 6, 6, 6, 6, 6, 6, 6, 6, 6, 6,
160 – 175	4, 4, 4, 4, 4, 4, 4, 4, 4, 4, 4, 4, 4, 4, 4, 4,
176 – 191	4, 4, 4, 4, 4, 4, 4, 4, 4, 4, 4, 4, 0, 0, 0, 0,
192 – 207	7, 7, 7, 7, 7, 7, 7, 7, 7, 7, 6, 6, 6, 6, 6, 6,
208 – 223	6, 6, 6, 6, 6, 6, 6, 6, 4, 4, 4, 4, 4, 4, 4, 4,
224 – 239	4, 4, 4, 4, 4, 4, 4, 4, 4, 4, 4, 4, 4, 4, 4, 4,
240 – 255	4, 4, 4, 4, 4, 4, 4, 4, 4, 4, 4, 4, 4, 4, 0, 0,
256 – 271	7, 7, 7, 7, 7, 7, 7, 7, 7, 7, 7, 7, 7, 7, 7, 7,
272 – 287	4, 4, 4, 4, 4, 4, 4, 4, 4, 4, 4, 4, 4, 4, 4, 4,
288 – 303	4, 4, 4, 4, 4, 4, 4, 4, 4, 4, 4, 4, 4, 4, 4, 4,
304 – 319	4, 4, 4, 4, 4, 4, 4, 4, 4, 4, 4, 4, 4, 4, 4, 0,
320 – 335	7, 7, 7, 7, 7, 7, 7, 7, 7, 7, 5, 5, 5, 5, 5, 5,
336 – 351	5, 5, 5, 5, 5, 5, 5, 5, 4, 4, 4, 4, 4, 4, 4, 4,
352 – 367	4, 4, 4, 4, 4, 4, 4, 4, 4, 4, 4, 4, 4, 4, 4, 4,
368 – 383	4, 4, 4, 4, 4, 4, 4, 4, 4, 4, 4, 4, 4, 4, 0, 0,
384 – 399	7, 7, 7, 7, 7, 7, 5, 5, 5, 5, 5, 5, 5, 5, 5, 5,
400 – 415	5, 5, 5, 5, 5, 5, 5, 5, 5, 5, 5, 5, 5, 5, 5, 5,
416 – 431	4, 4, 4, 4, 4, 4, 4, 4, 4, 4, 4, 4, 4, 4, 4, 4,
432 – 447	4, 4, 4, 4, 4, 4, 4, 4, 4, 4, 0, 0, 0, 0, 0, 0,
448 – 463	7, 7, 5, 5, 5, 5, 5, 5, 5, 5, 5, 5, 5, 5, 5, 5,
464 – 479	5, 5, 5, 5, 5, 5, 5, 5, 5, 5, 5, 5, 5, 5, 5, 5,
480 – 495	5, 5, 5, 5, 5, 5, 5, 5, 4, 4, 4, 4, 4, 4, 4, 4,
496 – 511	4, 4, 4, 4, 4, 4, 4, 4, 0, 0, 0, 0, 0, 0, 0, 0,
512 – 527	7, 5, 5, 5, 5, 5, 5, 5, 5, 5, 5, 5, 5, 5, 5, 5,
528 – 543	5, 5, 5, 5, 5, 5, 5, 5, 5, 5, 5, 5, 5, 5, 5, 5,
544 – 559	5, 5, 5, 5, 5, 5, 5, 5, 5, 5, 5, 5, 5, 5, 5, 5,
560 – 575	0, 0, 0, 0, 0, 0, 0, 0, 0, 0, 0, 0, 0, 0, 0, 0,
576 – 591	7, 7, 5, 5, 5, 5, 5, 5, 5, 5, 5, 5, 5, 5, 5, 5,
592 – 607	5, 5, 5, 5, 5, 5, 5, 5, 5, 5, 5, 5, 5, 5, 5, 5,
608 – 623	5, 5, 5, 5, 5, 5, 5, 5, 1, 1, 1, 1, 1, 1, 1, 1,
624 – 639	1, 1, 1, 1, 1, 1, 1, 1, 0, 0, 0, 0, 0, 0, 0, 0,
640 – 655	7, 7, 7, 7, 7, 7, 5, 5, 5, 5, 5, 5, 5, 5, 5, 5,
656 – 671	5, 5, 5, 5, 5, 5, 5, 5, 5, 5, 5, 5, 5, 5, 5, 5,
672 – 687	1, 1, 1, 1, 1, 1, 1, 1, 1, 1, 1, 1, 1, 1, 1, 1,
688 – 703	1, 1, 1, 1, 1, 1, 1, 1, 1, 1, 1, 1, 0, 0, 0, 0,
704 – 719	7, 7, 7, 7, 7, 7, 7, 7, 7, 7, 5, 5, 5, 5, 5, 5,
720 – 735	5, 5, 5, 5, 5, 5, 5, 5, 1, 1, 1, 1, 1, 1, 1, 1,
736 – 751	1, 1, 1, 1, 1, 1, 1, 1, 1, 1, 1, 1, 1, 1, 1, 1,
752 – 767	1, 1, 1, 1, 1, 1, 1, 1, 1, 1, 1, 1, 1, 1, 0, 0,
768 – 783	7, 7, 7, 7, 7, 7, 7, 7, 7, 7, 7, 7, 7, 7, 7, 7,
784 – 799	1, 1, 1, 1, 1, 1, 1, 1, 1, 1, 1, 1, 1, 1, 1, 1,
800 – 815	1, 1, 1, 1, 1, 1, 1, 1, 1, 1, 1, 1, 1, 1, 1, 1,
816 – 831	1, 1, 1, 1, 1, 1, 1, 1, 1, 1, 1, 1, 1, 1, 1, 0,
832 – 847	7, 7, 7, 7, 7, 7, 7, 7, 7, 7, 3, 3, 3, 3, 3, 3,
848 – 863	3, 3, 3, 3, 3, 3, 3, 3, 1, 1, 1, 1, 1, 1, 1, 1,
864 – 879	1, 1, 1, 1, 1, 1, 1, 1, 1, 1, 1, 1, 1, 1, 1, 1,
880 – 895	1, 1, 1, 1, 1, 1, 1, 1, 1, 1, 1, 1, 1, 1, 0, 0,
896 – 911	7, 7, 7, 7, 7, 3, 3, 3, 3, 3, 3, 3, 3, 3, 3, 3,
912 – 927	3, 3, 3, 3, 3, 3, 3, 3, 3, 3, 3, 3, 3, 3, 3, 3,
928 – 943	1, 1, 1, 1, 1, 1, 1, 1, 1, 1, 1, 1, 1, 1, 1, 1,
944 – 959	1, 1, 1, 1, 1, 1, 1, 1, 1, 1, 1, 1, 0, 0, 0, 0,
960 – 975	7, 7, 3, 3, 3, 3, 3, 3, 3, 3, 3, 3, 3, 3, 3, 3,
976 – 991	3, 3, 3, 3, 3, 3, 3, 3, 3, 3, 3, 3, 3, 3, 3, 3,
992 – 1007	3, 3, 3, 3, 3, 3, 3, 3, 1, 1, 1, 1, 1, 1, 1, 1,
1008 – 1023	1, 1, 1, 1, 1, 1, 1, 0, 0, 0, 0, 0, 0, 0, 0, 0,

IC7, IC9
MB7054-T7CA
PROGRAMMED DATA

WORD (ADDRESS)	DATA OUTPUTS (IN HEXADECIMAL)
0 – 15	F, B, B, B, B, B, B, B, B, B, B, B, B, B, B, B,
16 – 31	B, B, B, B, B, B, B, B, B, B, B, B, B, B, B, B,
32 – 47	B, B, B, B, B, B, B, B, B, B, B, B, B, B, B, B,
48 – 63	8, 8, 8, 8, 8, 8, 8, 8, 8, 8, 8, 8, 8, 8, 8, 8,
64 – 79	F, F, B, B, B, B, B, B, B, B, B, B, B, B, B, B,
80 – 95	B, B, B, B, B, B, B, B, B, B, B, B, B, B, B, B,
96 – 111	B, B, B, B, B, B, B, B, A, A, A, A, A, A, A, A,
112 – 127	A, A, A, A, A, A, 8, 8, 8, 8, 8, 8, 8, 8, 8, 8,
128 – 143	F, F, F, F, F, F, B, B, B, B, B, B, B, B, B, B,
144 – 159	B, B, B, B, B, B, B, B, B, B, B, B, B, B, B, B,
160 – 175	A, A, A, A, A, A, A, A, A, A, A, A, A, A, A, A,
176 – 191	A, A, A, A, A, A, A, A, A, A, A, A, 8, 8, 8, 8,
192 – 207	F, F, F, F, F, F, F, F, F, F, B, B, B, B, B, B,
208 – 223	B, B, B, B, B, B, B, B, A, A, A, A, A, A, A, A,
224 – 239	A, A, A, A, A, A, A, A, A, A, A, A, A, A, A, A,
240 – 255	A, A, A, A, A, A, A, A, A, A, A, A, A, A, 8, 8,
256 – 271	F, F, F, F, F, F, F, F, F, F, F, F, F, F, F, F,
272 – 287	A, A, A, A, A, A, A, A, A, A, A, A, A, A, A, A,
288 – 303	A, A, A, A, A, A, A, A, A, A, A, A, A, A, A, A,
304 – 319	A, A, A, A, A, A, A, A, A, A, A, A, A, A, 8, 8,
320 – 335	F, F, F, F, F, F, F, F, F, F, E, E, E, E, E, E,
336 – 351	E, E, E, E, E, E, E, E, A, A, A, A, A, A, A, A,
352 – 367	A, A, A, A, A, A, A, A, A, A, A, A, A, A, A, A,
368 – 383	A, A, A, A, A, A, A, A, A, A, A, A, A, A, 8, 8,
384 – 399	F, F, F, F, F, F, E, E, E, E, E, E, E, E, E, E,
400 – 415	E, E, E, E, E, E, E, E, E, E, E, E, E, E, E, E,
416 – 431	A, A, A, A, A, A, A, A, A, A, A, A, A, A, A, A,
432 – 447	A, A, A, A, A, A, A, A, A, A, A, A, 8, 8, 8, 8,
448 – 463	F, F, E, E, E, E, E, E, E, E, E, E, E, E, E, E,
464 – 479	E, E, E, E, E, E, E, E, E, E, E, E, E, E, E, E,
480 – 495	E, E, E, E, E, E, E, E, A, A, A, A, A, A, A, A,
496 – 511	A, A, A, A, A, A, 8, 8, 8, 8, 8, 8, 8, 8, 8, 8,
512 – 527	F, B, B, B, B, B, B, B, B, B, B, B, B, B, B, B,
528 – 543	B, B, B, B, B, B, B, B, B, B, B, B, B, B, B, B,
544 – 559	B, B, B, B, B, B, B, B, B, B, B, B, B, B, B, B,
560 – 575	8, 8, 8, 8, 8, 8, 8, 8, 8, 8, 8, 8, 8, 8, 8, 8,
576 – 591	F, F, B, B, B, B, B, B, B, B, B, B, B, B, B, B,
592 – 607	B, B, B, B, B, B, B, B, B, B, B, B, B, B, B, B,
608 – 623	B, B, B, B, B, B, B, B, A, A, A, A, A, A, A, A,
624 – 639	A, A, A, A, A, A, 8, 8, 8, 8, 8, 8, 8, 8, 8, 8,
640 – 655	F, F, F, F, F, F, B, B, B, B, B, B, B, B, B, B,
656 – 671	B, B, B, B, B, B, B, B, B, B, B, B, B, B, B, B,
672 – 687	A, A, A, A, A, A, A, A, A, A, A, A, A, A, A, A,
688 – 703	A, A, A, A, A, A, A, A, A, A, A, A, 8, 8, 8, 8,
704 – 719	F, F, F, F, F, F, F, F, F, F, B, B, B, B, B, B,
720 – 735	B, B, B, B, B, B, B, B, A, A, A, A, A, A, A, A,
736 – 751	A, A, A, A, A, A, A, A, A, A, A, A, A, A, A, A,
752 – 767	A, A, A, A, A, A, A, A, A, A, A, A, A, A, 8, 8,
768 – 783	F, F, F, F, F, F, F, F, F, F, F, F, F, F, F, F,
784 – 799	A, A, A, A, A, A, A, A, A, A, A, A, A, A, A, A,
800 – 815	A, A, A, A, A, A, A, A, A, A, A, A, A, A, A, A,
816 – 831	A, A, A, A, A, A, A, A, A, A, A, A, A, A, A, 8,
832 – 847	F, F, F, F, F, F, F, F, F, F, E, E, E, E, E, E,
848 – 863	E, E, E, E, E, E, E, E, A, A, A, A, A, A, A, A,
864 – 879	A, A, A, A, A, A, A, A, A, A, A, A, A, A, A, A,
880 – 895	A, A, A, A, A, A, A, A, A, A, A, A, A, A, 8, 8,
896 – 911	F, F, F, F, F, E, E, E, E, E, E, E, E, E, E, E,
912 – 927	E, E, E, E, E, E, E, E, E, E, E, E, E, E, E, E,
928 – 943	A, A, A, A, A, A, A, A, A, A, A, A, A, A, A, A,
944 – 959	A, A, A, A, A, A, A, A, A, A, A, A, 8, 8, 8, 8,
960 – 975	7, 7, 6, 6, 6, 6, 6, 6, 6, 6, 6, 6, 6, 6, 6, 6,
976 – 991	6, 6, 6, 6, 6, 6, 6, 6, 6, 6, 6, 6, 6, 6, 6, 6,
992 – 1007	6, 6, 6, 6, 6, 6, 6, 6, 2, 2, 2, 2, 2, 2, 2, 2,
1008 – 1023	2, 2, 2, 2, 2, 2, 2, 0, 0, 0, 0, 0, 0, 0, 0, 0,

VIDEO LOGIC BOARD — *COMPONENT SIDE* —

FORMER
NTSC; # 20001 – 20499
PS ; # 20001 – 20399

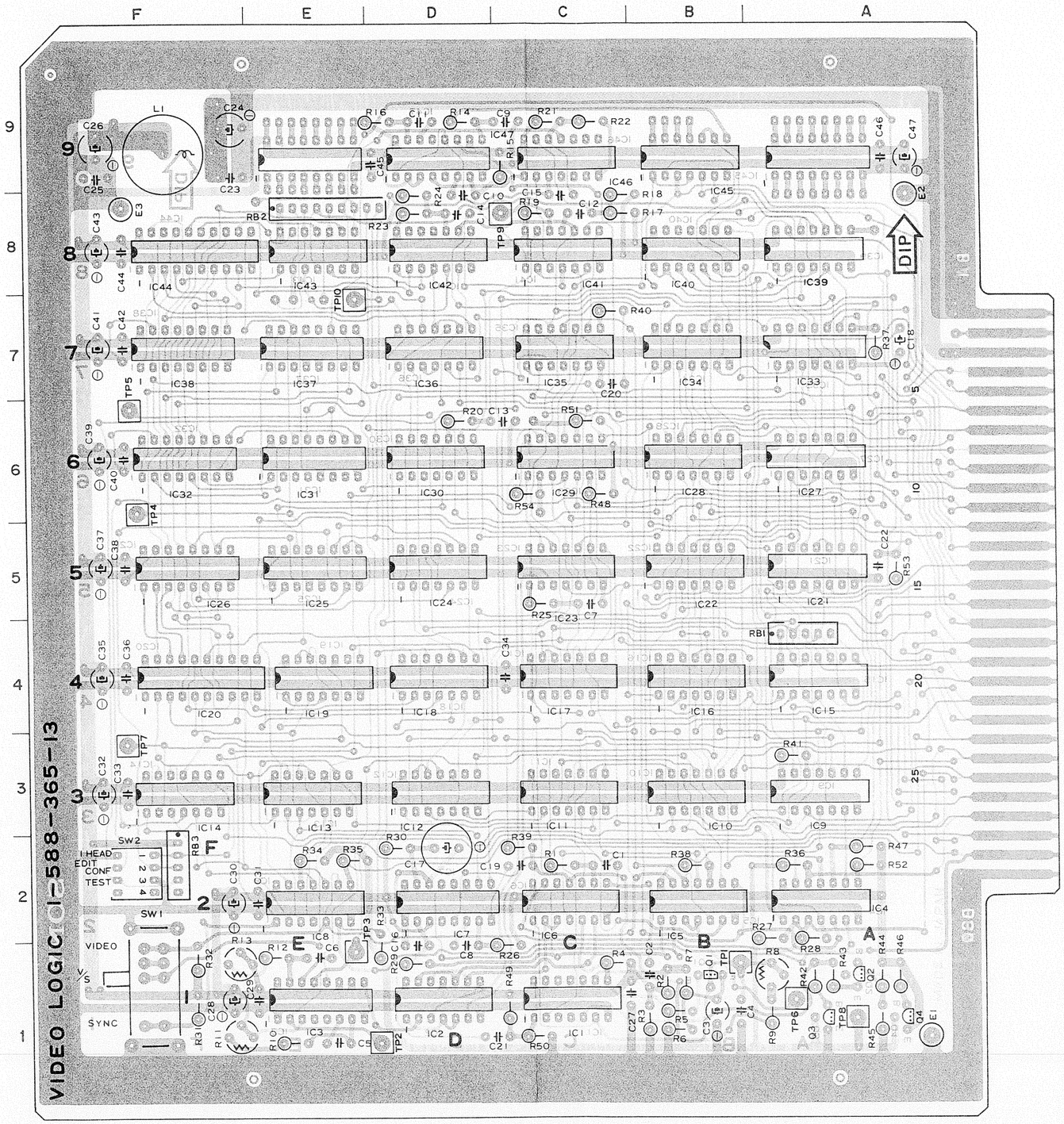

BVH-1100A (NTSC)
BVH-1100APS
VIDEO LOGIC BOARD
1-588-365-13

E1 A - 1
E2 A - 8
E3 F - 8

IC1 C - 1
IC2 D - 1
IC3 E - 1
IC4 A - 2
IC5 B - 2
IC6 C - 2
IC7 D - 2
IC8 E - 2
IC9 A - 3
IC10 B - 3
IC11 C - 3
IC12 D - 3
IC13 E - 3
IC14 F - 3
IC15 A - 4
IC16 B - 4
IC17 C - 4
IC18 D - 4
IC19 E - 4
IC20 F - 4
IC21 A - 5
IC22 B - 5
IC23 C - 5
IC24 D - 5
IC25 E - 5
IC26 F - 5
IC27 A - 6
IC28 B - 6
IC29 C - 6
IC30 D - 6
IC31 E - 6
IC32 F - 6
IC33 A - 7
IC34 B - 7
IC35 C - 7
IC36 D - 7
IC37 E - 7
IC38 F - 7
IC39 A - 8
IC40 B - 8
IC41 C - 8
IC42 D - 8
IC43 E - 8
IC44 F - 8
IC45 B - 9
IC46 C - 9
IC47 D - 9

Q1 B - 1
Q2 A - 1
Q3 A - 1
Q4 A - 1

R8 A - 1
R11 F - 1
R13 F - 1

SW1 F - 1
SW2 F - 2

TP1 B - 1
TP2 D - 1
TP3 E - 1
TP4 F - 6
TP5 F - 6
TP6 A - 1
TP7 F - 3
TP8 A - 1
TP9 C - 8
TP10 E - 7

FORMER
NTSC; # 20001 – 20499
PS ; # 20001 – 20399

VIDEO LOGIC BOARD
Video System Control

FORMER
NTSC; # 20001 – 20499
PS ; # 20001 – 20399

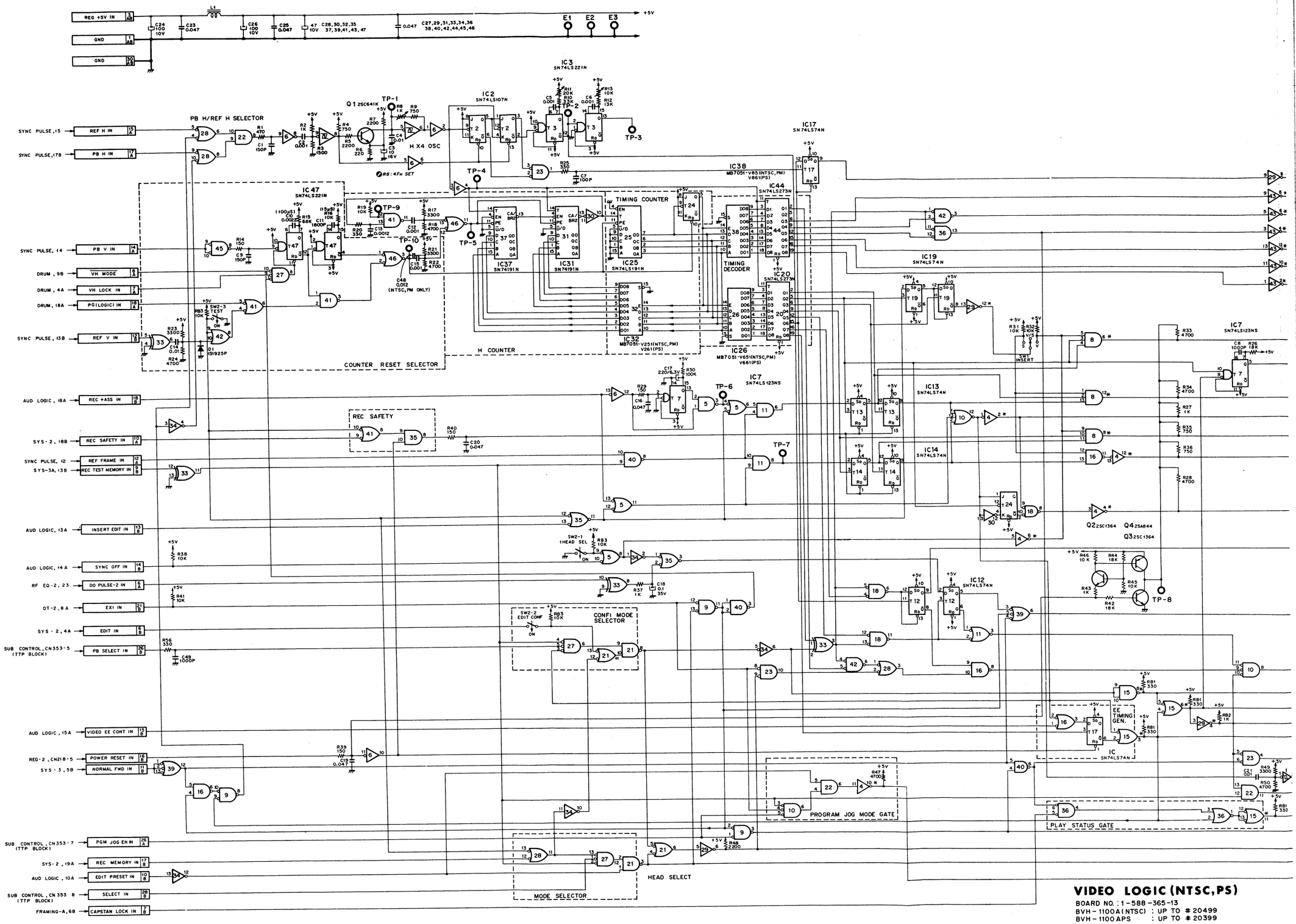

21-203 (5/7)

21-203 (6/7)

VIDEO LOGIC (NTSC,PS)
BOARD NO. : 1-588-365-13
BVH-1100A(NTSC) : UP TO # 20499
BVH-1100APS : UP TO # 20399

VIDEO LOGIC

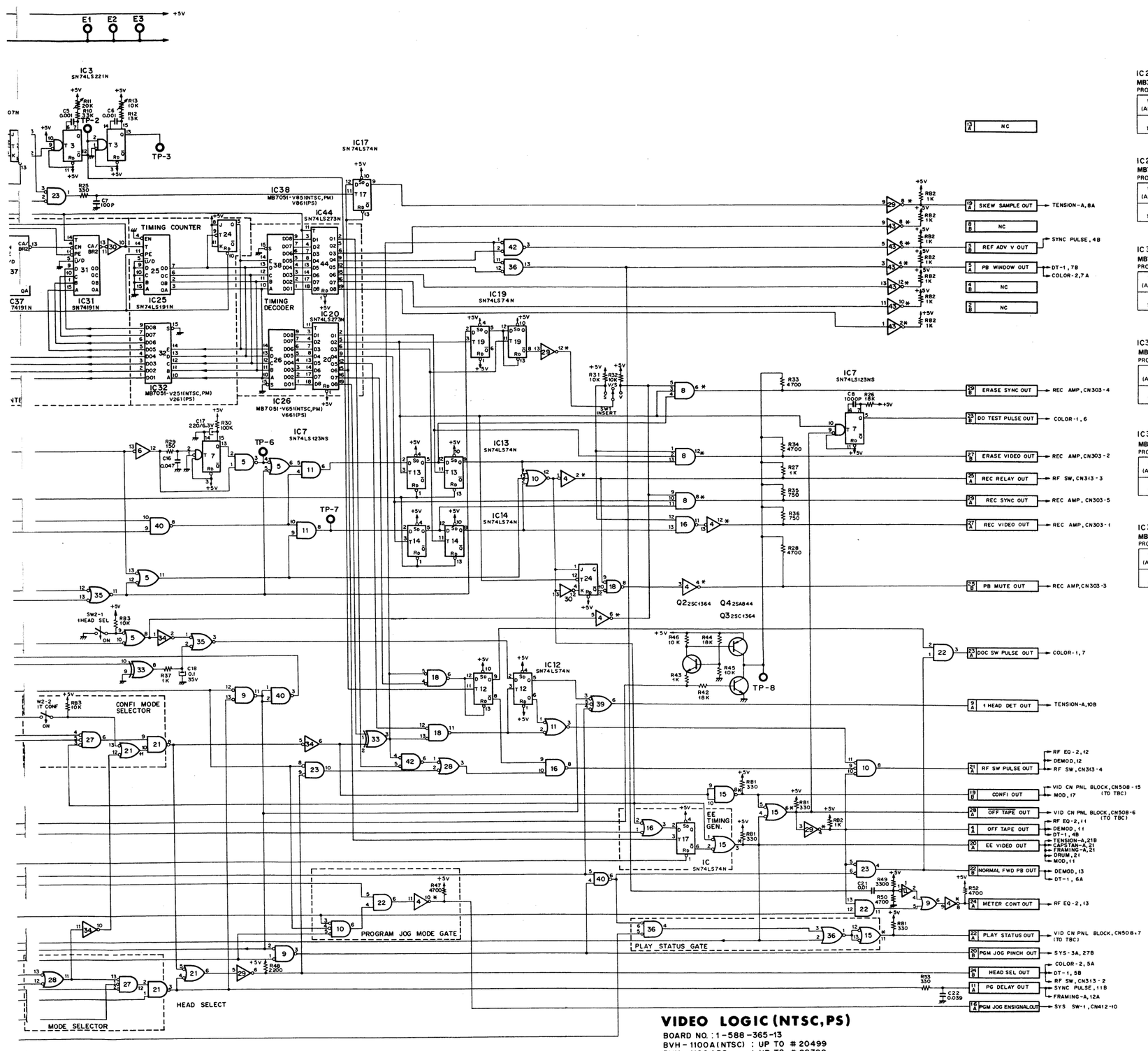

VIDEO LOGIC (NTSC,PS)

BOARD NO. : 1-588-365-13
BVH-1100A(NTSC) : UP TO #20499
BVH-1100APS : UP TO #20399

IC26(FOR NTSC,PM)
MB7051-V651
PROGRAMMED DATA

WORD (ADDRESS)	DATA OUTPUTS (IN HEXA DECIMAL)
0-15	90. 90. 90. B0. B8. B8. BA. AA. AA. AB. AB. AB. A9. A1. A1. A1.
16-31	A9. A9. AB. AB. AB. EB. EB. 6B. EA. AA. AA. AA. BA. 9A. 9E. 9C.

IC26(FOR PAL/SECAM)
MB7051-V661
PROGRAMMED DATA

WORD (ADDRESS)	DATA OUTPUTS (IN HEXA DECIMAL)
0-15	98. 90. 90. 90. B0. B8. B8. BA. AA. AB. AB. AB. A9. A1. A1. A1.
16-31	A9. AB. AB. AB. AB. EB. EB. 6B. EA. AA. AA. AA. BA. 9A. 9E. 9C.

IC32 (FOR NTSC,PM)
MB7051-V251
PROGRAMMED DATA

WORD (ADDRESS)	DATA OUTPUTS (IN HEXA DECIMAL)
0-15	FE. F7. EB. F7. FD. FA. F8. F7. 7F. 87. E5. F8. FA. FE. F6. E3.
16-31	F9. FC. FA. 7F. 5A. F6. FC. D7. F2. 7F. 7F. E5. FD. FD. FC. FB.

IC32 (FOR PAL/SECAM)
MB7051-V261
PROGRAMMED DATA

WORD (ADDRESS)	DATA OUTPUTS (IN HEXA DECIMAL)
0-15	FC. FD. F8. E4. F5. FD. F9. F7. 7F. 48. E6. F9. F7. FD. F8. DA.
16-31	F7. F7. FD. 7F. 23. F7. F9. CF. F1. 7F. 48. E6. FD. FE. FC. FB.

IC38 (FOR NTSC,PM)
MB7051-V851
PROGRAMMED DATA

WORD (ADDRESS)	DATA OUTPUTS (IN HEXA DECIMAL)
0-15	80. 00. 18. 18. 18. 18. 98. 98. 98. 98. 80. 80. 80. 00. 18.
16-31	18. 18. 98. 98. 98. 98. 98. 98. 98. 98. 80. 80. 80. 80. 80.

IC38(FOR PAL/SECAM)
MB7051-V861
PROGRAMMED DATA

WORD (ADDRESS)	DATA OUTPUTS (IN HEXA DECIMAL)
0-15	80. 80. 00. 18. 18. 18. 98. 98. 98. 80. 80. 80. 00. 00. 18.
16-31	18. 98. 98. 98. 98. 98. 98. 98. 98. 98. 80. 80. 80. 80. 80.

FORMER
NTSC; #20001 – 20499
PS ; #20001 – 20399

REF. NO.	TYPE
IC1	SN74LS14N, TTL; TI
2	SN74LS107N
3	SN74LS221N
4	SN7405N
5	SN74LS00N
6	SN74LS04N
7	SN74LS123NS
8	SN74LS15N
9	SN74LS32N
10	SN74LS27N
11	SN74LS08N
12	SN74LS74N
13	SN74LS74N
14	SN74LS74N
15	SN74LS38N
16	SN74LS00N
17	SN74LS74N
18	SN74LS32N
19	SN74LS74N
20	SN74LS273N
21	SN74LS00N
22	SN74LS08N
23	SN74LS02N
24	SN74LS107N
25	SN74LS191N
26	MB7051-V651, P-ROM; (NTSC, PM) MB7051-V661, P-ROM; (PS)
27	SN74LS27N
28	SN74LS00N
29	SN74LS05N
30	SN74LS04N
31	SN74191N
32	MB7051-V259, P-ROM; (NTSC, PM) MB7051-V261, P-ROM; (PS)
33	SN74LS86N
34	SN74LS04N
35	SN74LS08N
36	SN74LS02N
37	SN74191N
38	MB7051-V851, P-ROM; (NTSC, PM) MB7051-V861, P-ROM; (PS)
39	SN74LS10N
40	SN74LS00N
41	SN74LS00N
42	SN74LS32N
43	SN7406N
44	SN74LS273N
45	SN74LS32N
46	SN74LS08N
47	SN74LS221N

VIDEO LOGIC BOARD — *COMPONENT SIDE* —

NEW
NTSC; # 20501 –
PS ; # 20401 –

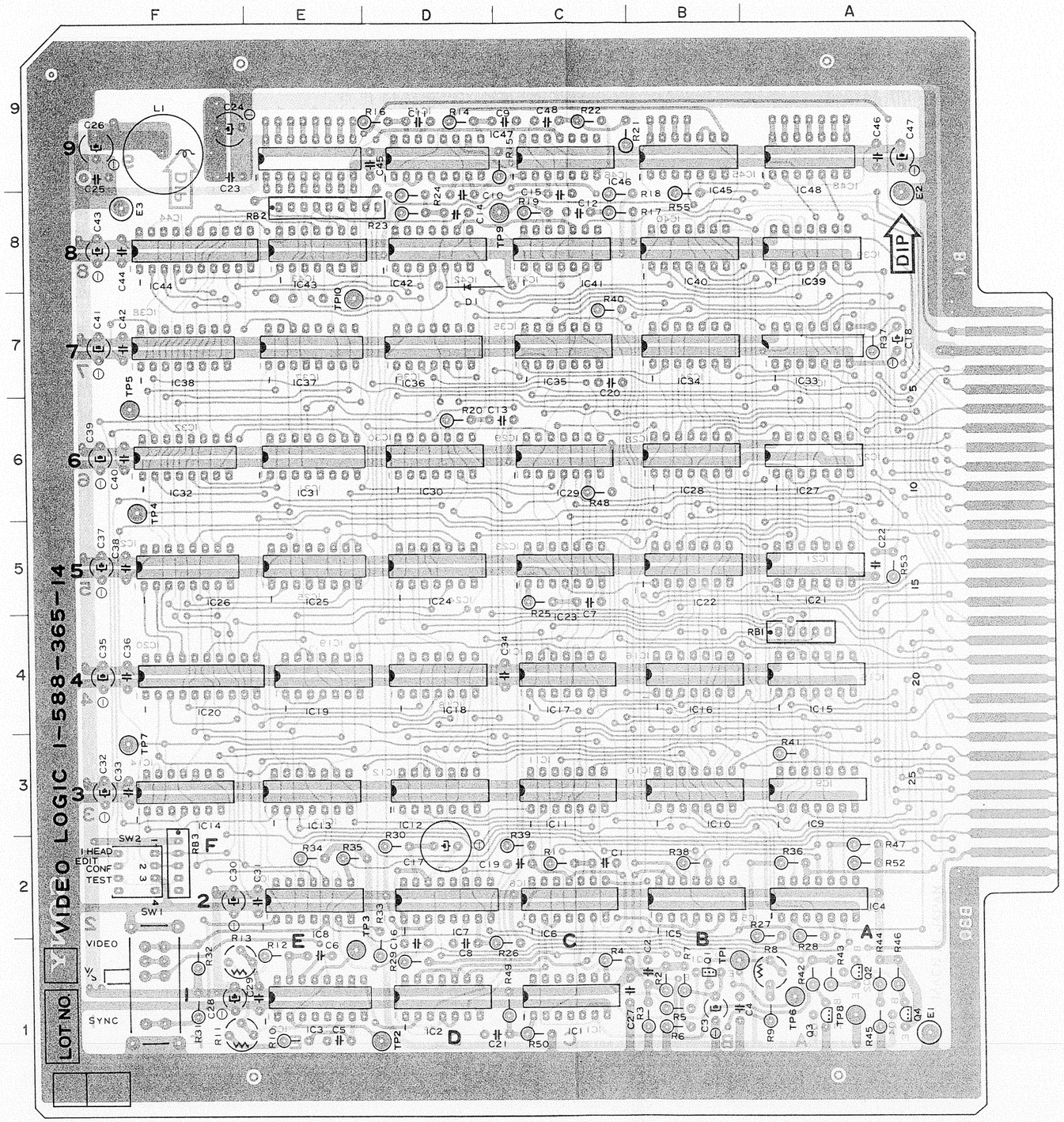

BVH-1100A (NTSC)
BVH-1100APS
BVH-1100APM
VIDEO LOGIC BOARD
1-588-365-14

D1 D - 7

E1 A - 1
E2 A - 8
E3 F - 8

IC1 C - 1
IC2 D - 2
IC3 E - 1
IC4 A - 2
IC5 B - 2
IC6 C - 2
IC7 D - 2
IC8 E - 2
IC9 A - 3
IC10 B - 3
IC11 C - 3
IC12 D - 3
IC13 E - 3
IC14 F - 3
IC15 A - 4
IC16 B - 4
IC17 C - 4
IC18 D - 4
IC19 E - 4
IC20 F - 4
IC21 A - 5
IC22 B - 5
IC23 C - 5
IC24 D - 5
IC25 E - 5
IC26 F - 5
IC27 A - 6
IC28 B - 6
IC29 C - 6
IC30 D - 6
IC31 E - 6
IC32 F - 6
IC33 A - 7
IC34 B - 7
IC35 C - 7
IC36 D - 7
IC37 E - 7
IC38 F - 7
IC39 A - 8
IC40 B - 8
IC41 C - 8
IC42 D - 8
IC43 E - 8
IC44 F - 8
IC45 B - 9
IC46 C - 9
IC47 D - 9
IC48 A - 9

Q1 B - 1
Q2 A - 1
Q3 A - 1
Q4 A - 1
R8 A - 1
R11 F - 1
R13 F - 1

SW1 F - 1
SW2 F - 2

TP1 B - 1
TP2 D - 1
TP3 E - 1
TP4 F - 6
TP5 F - 6
TP6 A - 1
TP7 F - 3
TP8 A - 1
TP9 C - 9
TP10 E - 7

NEW
NTSC; # 20501 –
PS ; # 20401 –

VIDEO LOGIC BOARD

Video System Control

NEW
NTSC; # 20501 –
PS ; # 20401 –

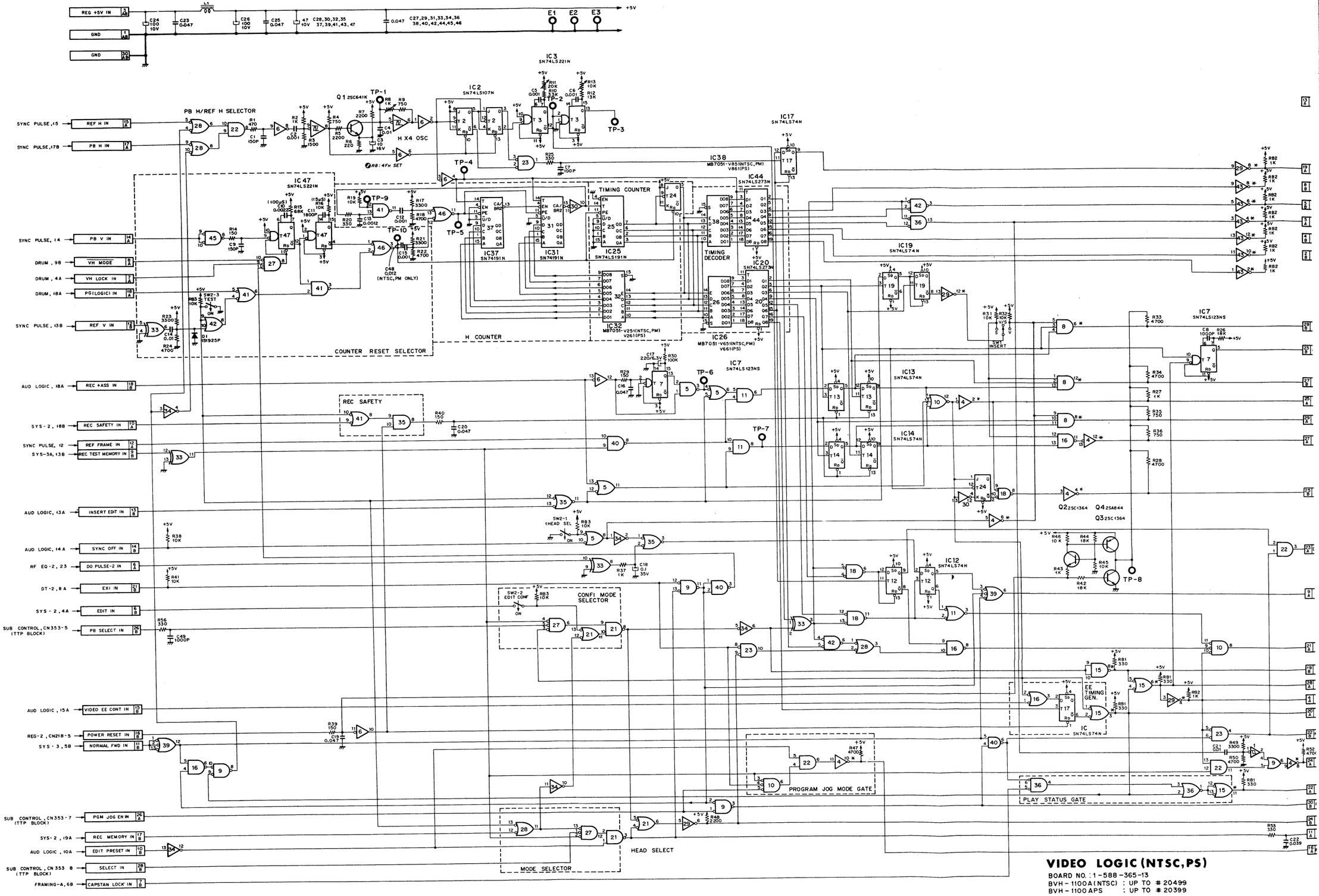

VIDEO LOGIC (NTSC,PS)

BOARD NO. : 1-588-365-13
BVH-1100A(NTSC) : UP TO # 20499
BVH-1100APS : UP TO # 20399

VIDEO LOGIC

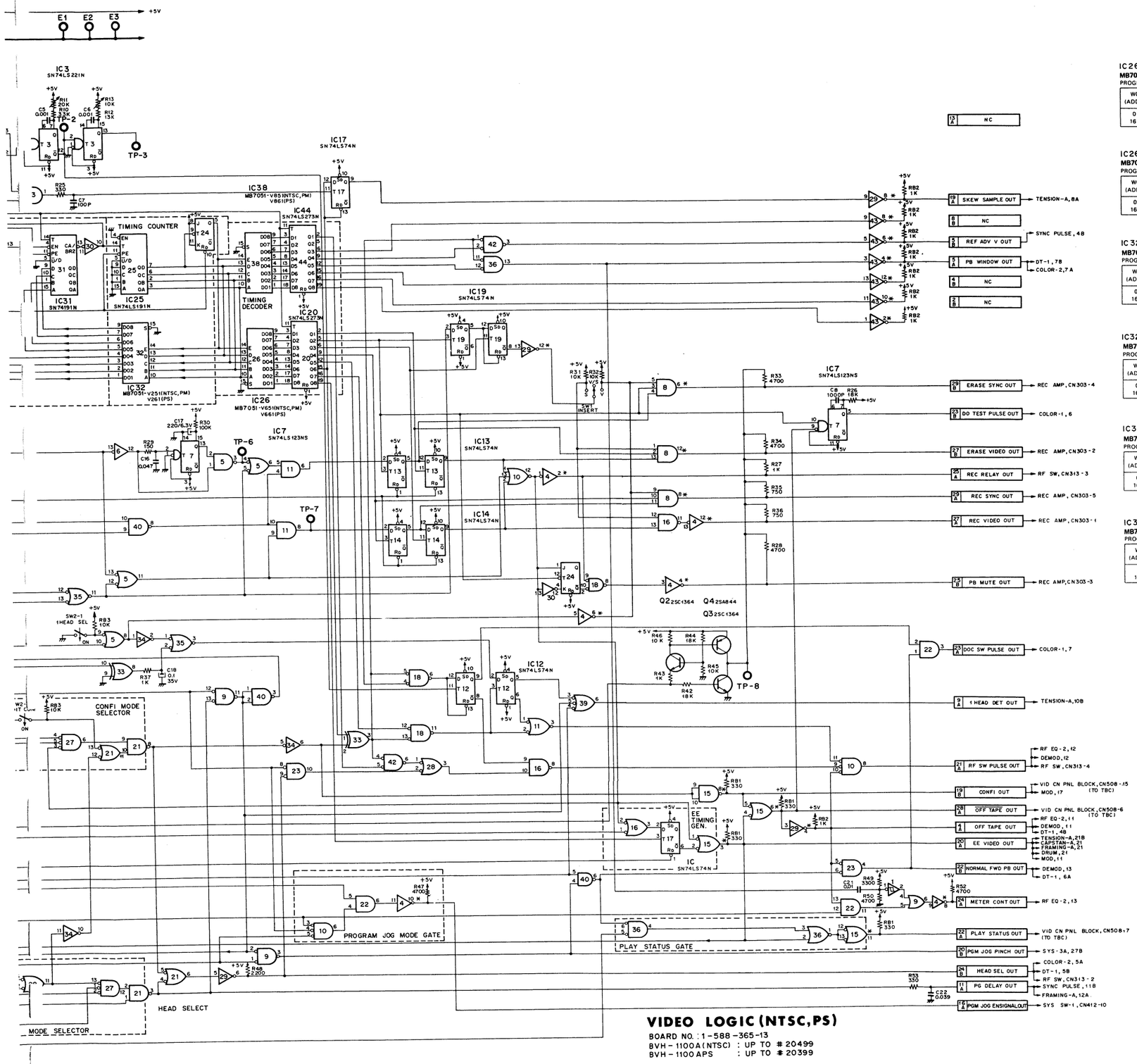

VIDEO LOGIC (NTSC,PS)

BOARD NO. : 1-588-365-13
BVH-1100A(NTSC) : UP TO # 20499
BVH-1100 APS : UP TO # 20399

IC26 (FOR NTSC, PM)
MB7051-V651
PROGRAMMED DATA

WORD (ADDRESS)	DATA OUTPUTS (IN HEXA DECIMAL)
0-15	90. 90. 90. B0. B8. B8. BA. AA. AA. AB. AB. AB. A9. A1. A1. A1.
16-31	A9. A9. AB. AB. AB. EB. EB. 6B. EA. AA. AA. AA. BA. 9A. 9E. 9C.

IC26 (FOR PAL/SECAM)
MB7051-V661
PROGRAMMED DATA

WORD (ADDRESS)	DATA OUTPUTS (IN HEXA DECIMAL)
0-15	98. 90. 90. 90. B0. B8. B8. BA. AA. AB. AB. AB. A9. A1. A1. A1.
16-31	A9. AB. AB. AB. AB. EB. EB. 6B. EA. AA. AA. AA. BA. 9A. 9E. 9C.

IC32 (FOR NTSC, PM)
MB7051-V251
PROGRAMMED DATA

WORD (ADDRESS)	DATA OUTPUTS (IN HEXA DECIMAL)
0-15	FE. F7. EB. F7. FD. FA. F8. F7. 7F. 87. E5. F8. FA. FE. F6. E3.
16-31	F9. FC. FA. 7F. 5A. F6. FC. D7. F2. 7F. 7F. E5. FD. FD. FC. FB.

IC32 (FOR PAL/SECAM)
MB7051-V261
PROGRAMMED DATA

WORD (ADDRESS)	DATA OUTPUTS (IN HEXA DECIMAL)
0-15	FC. FD. F8. E4. F5. FD. F9. F7. 7F. 48. E6. F9. F7. FD. F8. DA.
16-31	F7. F7. FD. 7F. 23. F7. F9. CF. F1. 7F. 48. E6. FD. FE. FC. FB.

IC38 (FOR NTSC, PM)
MB7051-V851
PROGRAMMED DATA

WORD (ADDRESS)	DATA OUTPUTS (IN HEXA DECIMAL)
0-15	80. 00. 18. 18. 18. 18. 98. 98. 98. 98. 80. 80. 80. 80. 00. 18.
16-31	18. 18. 98. 98. 98. 98. 98. 98. 98. 98. 98. 80. 80. 80. 80. 80.

IC38 (FOR PAL/SECAM)
MB7051-V861
PROGRAMMED DATA

WORD (ADDRESS)	DATA OUTPUTS (IN HEXA DECIMAL)
0-15	80. 80. 00. 18. 18. 18. 18. 98. 98. 98. 80. 80. 80. 00. 00. 18.
16-31	18. 98. 98. 98. 98. 98. 98. 98. 98. 98. 98. 80. 80. 80. 80. 80.

REF. NO.	TYPE
IC1	SN74LS14N, TTL; TI
2	SN74LS107N
3	SN74LS221N
4	SN7405N
5	SN74LS00N
6	SN74LS04N
7	SN74LS123NS
8	SN74LS15N
9	SN74LS32N
10	SN74LS27N
11	SN74LS08N
12	SN74LS74N
13	SN74LS74N
14	SN74LS74N
15	SN74LS38N
16	SN74LS00N
17	SN74LS74N
18	SN74LS32N
19	SN74LS74N
20	SN74LS273N
21	SN74LS00N
22	SN74LS08N
23	SN74LS02N
24	SN74LS107N
25	SN74LS191N
26	MB7051-V651, P-ROM; (NTSC, PM) MB7051-V661, P-ROM; (PS)
27	SN74LS27N
28	SN74LS00N
29	SN74LS05N
30	SN74LS04N
31	SN74191N
32	MB7051-V259, P-ROM; (NTSC, PM) MB7051-V261, P-ROM; (PS)
33	SN74LS86N
34	SN74LS04N
35	SN74LS08N
36	SN74LS02N
37	SN74191N
38	MB7051-V851, P-ROM; (NTSC, PM) MB7051-V861, P-ROM; (PS)
39	SN74LS10N
40	SN74LS00N
41	SN74LS00N
42	SN74LS32N
43	SN7406N
44	SN74LS273N
45	SN74LS32N
46	SN74LS08N
47	SN74LS221N

NEW
NTSC; # 20501 –
PS ; # 20401 –

FRAME ; TAPE TRANSPORT

FRAME ; TAPE TRANSPORT

SUB CONTROL BOARD – *COMPONENT SIDE* –

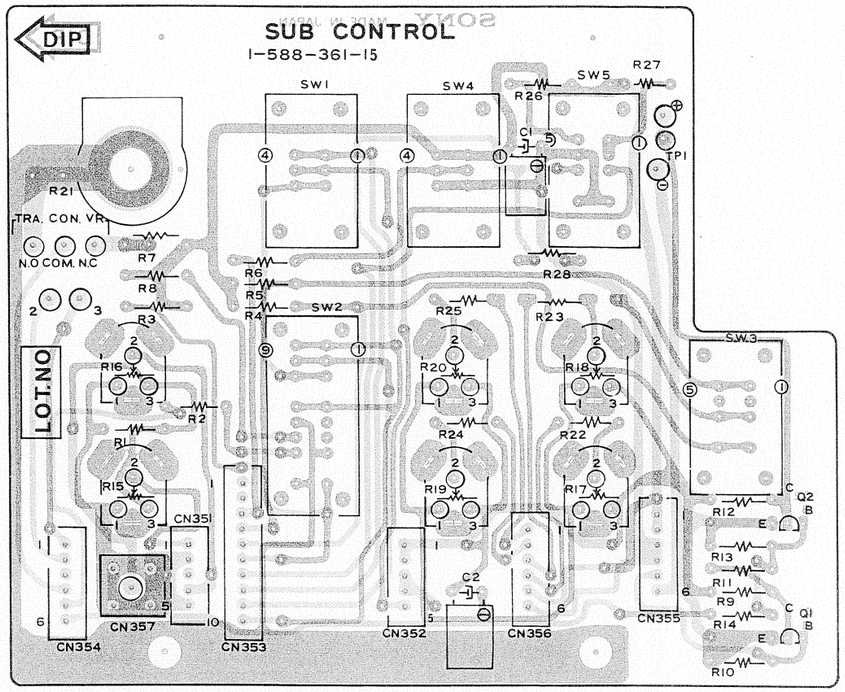

RPH-1 BOARD (EXCEPT PS-A4) – *SOLDERING SIDE* –

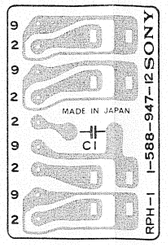

RPH-2 BOARD (PS-A4) – *SOLDERING SIDE* –

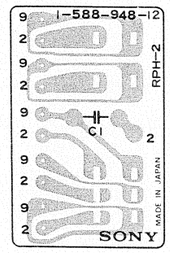

TC BOARD – *SOLDERING SIDE* –

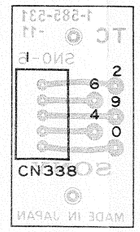

ARM-LED BOARD – *COMPONENT SIDE* –

ARM-POT BOAF – *SOLDERING*

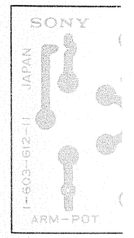

COUPLER-SA BOARD – *COMPONENT SIDE* –

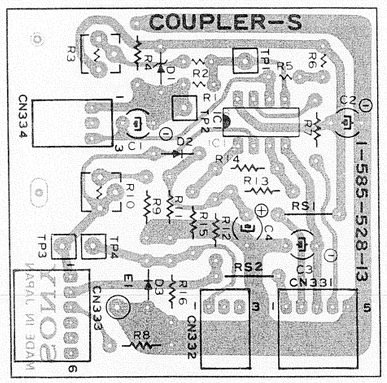

COUPLER-T BOARD – *COMPONENT SIDE* –

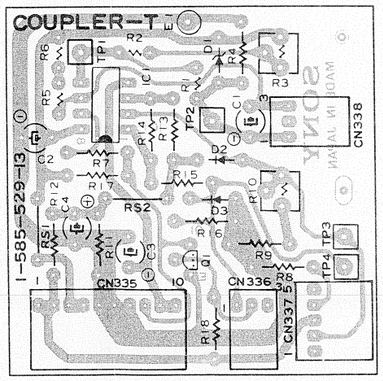

COUPLER-A BOARD – *COMPONENT SIDE* –

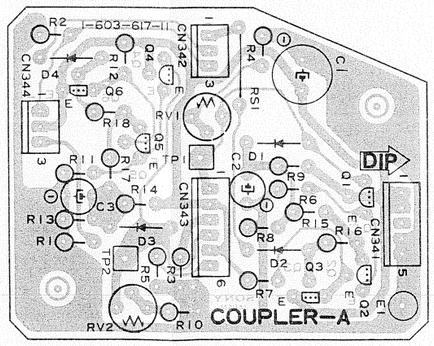

A4-AUX BOARD – *COMPC*

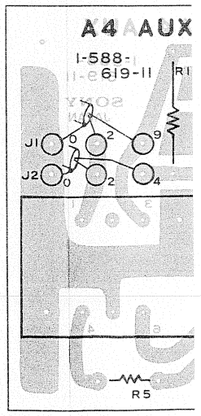

FRAME ; TAPE TRANSPORT

FRAME ; TAPE TRANSPORT

RPH-1 BOARD (EXCEPT PS-A4)
– SOLDERING SIDE –

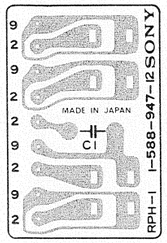

RPH-2 BOARD (PS-A4)
– SOLDERING SIDE –

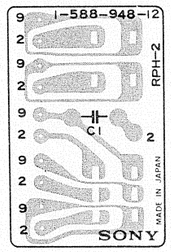

CEH-2 BOARD
– SOLDERING SIDE –

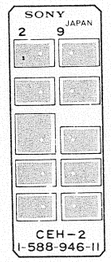

FEH-1 BOARD
– SOLDERING SIDE –

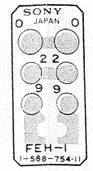

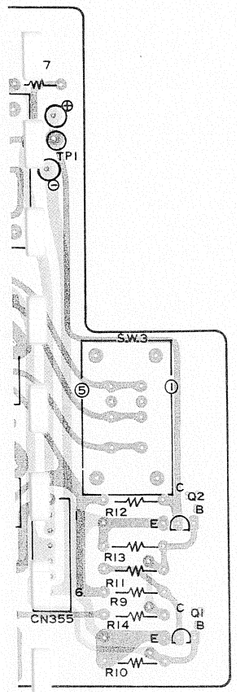

TC BOARD
– SOLDERING SIDE –

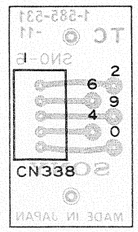

ARM-LED BOARD
– COMPONENT SIDE –

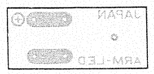

ARM-POT BOARD
– SOLDERING SIDE –

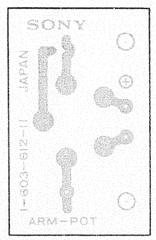

SE-1 BOARD
– SOLDERING SIDE –

SE-2 BOARD
– SOLDERING SIDE –

PLER-T BOARD *– COMPONENT SIDE –*

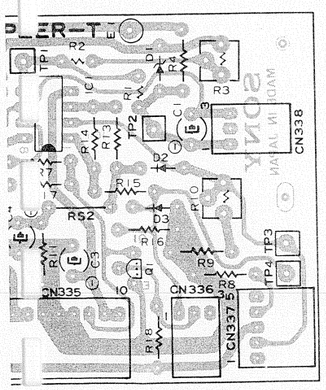

COUPLER-A BOARD *– COMPONENT SIDE –*

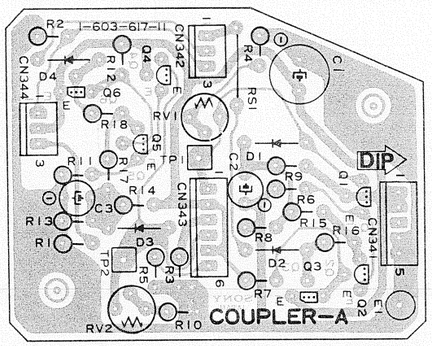

A4-AUX BOARD *– COMPONENT SIDE –*

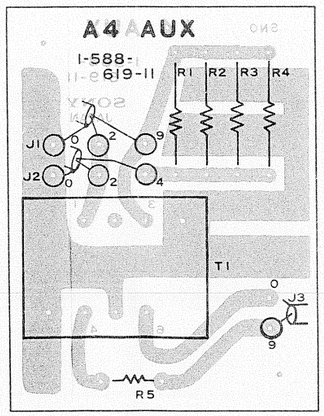

AUDIO AUX BOARD *– COMPONENT SIDE –*

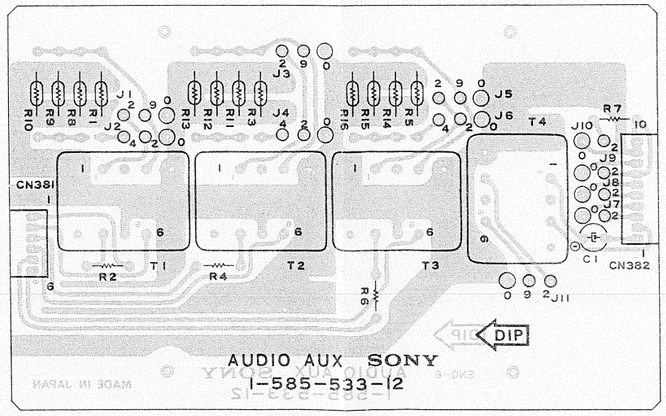

FRAME ; TAPE TRANSPORT

FRAME WIRING; TAPE TRANSPORT BLOCK

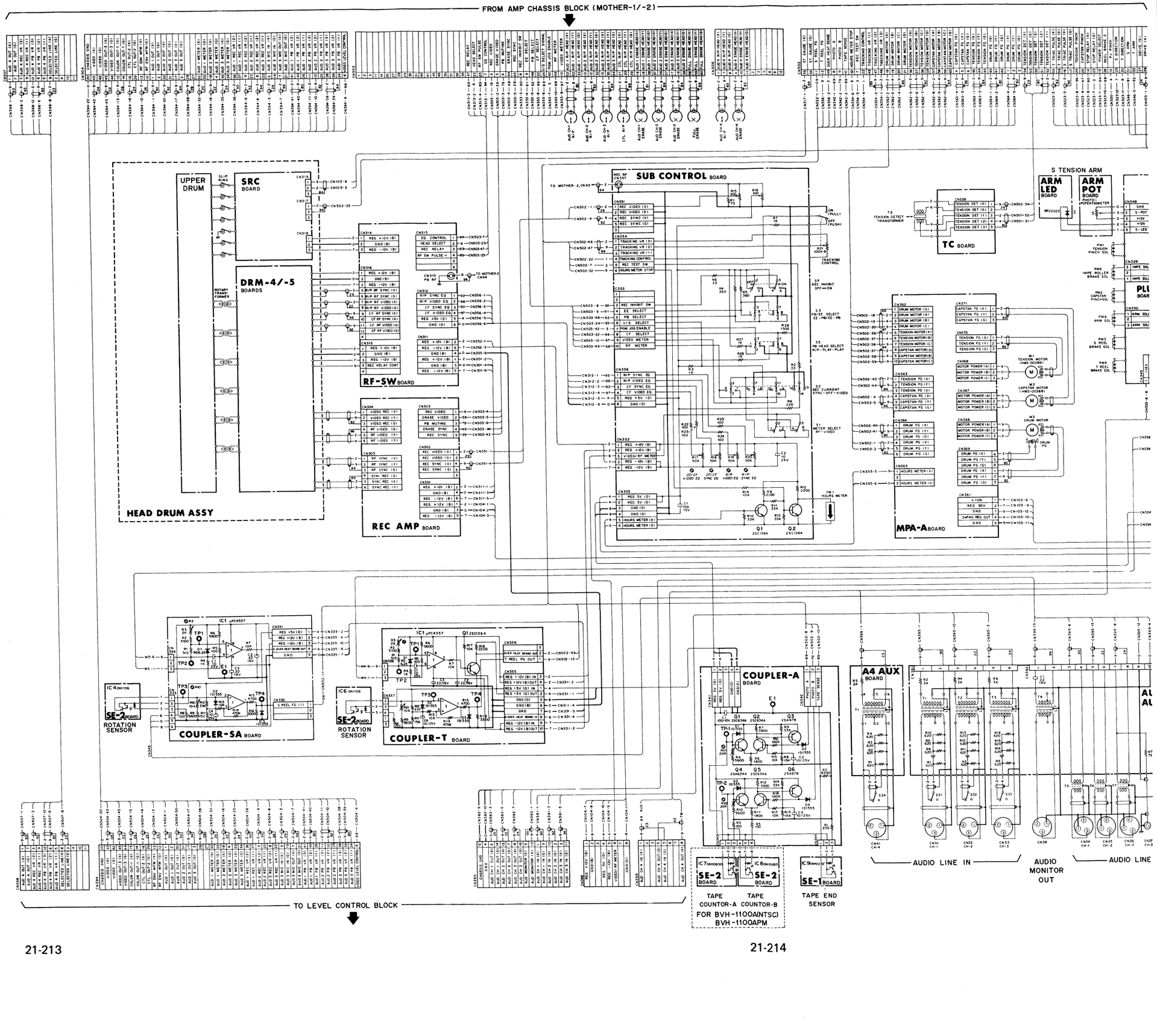

FRAME WIRING; POWER SUPPLY BLOCK

AC-A BOARD

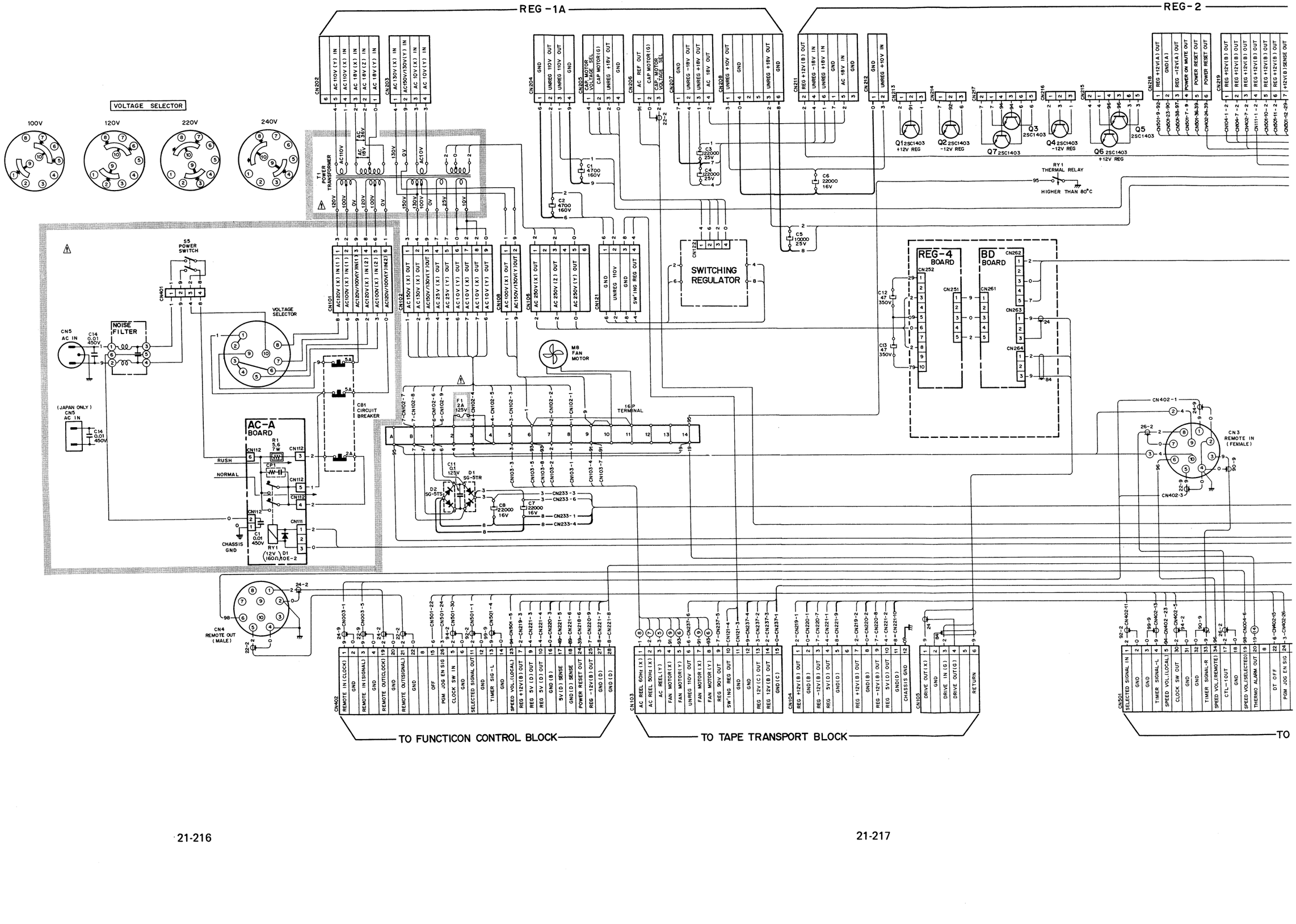

FRAME ; POWER SUPPLY

FRAME ; POWER SUPPLY

REG-1A

REG-2

REG-3A

CN204 GND / UNREG 110V OUT / UNREG 110V OUT / GND

CN205 CAP. MOTOR VOLTAGE SEL / CAP MOTOR(G) / UNREG +18V OUT / GND

CN206 AC REF OUT / CAP MOTOR(G) / CAP. MOTOR VOLTAGE SEL

CN207 GND / UNREG -18V OUT / UNREG +18V OUT / AC 18V OUT

CN208 UNREG +10V OUT / GND / UNREG +18V OUT / GND

CN211 REG +12V(B) OUT / UNREG -18V IN / UNREG +18V IN / GND / AC 18V IN / GND

CN212 GND / UNREG +10V IN

CN213 Q1 2SC1403 +12V REG

CN214 Q2 2SC1403 -12V REG

CN217 Q7 2SC1403

Q3 2SC1403

CN216 Q4 2SC1403 -12V REG

CN215 Q6 2SC1403 +12V REG

Q5 2SC1403

CN218 REG +12V(A) OUT / GND(A) / REG -12V(A) OUT / POWER ON MUTE OUT / POWER RESET OUT / POWER RESET OUT

CN219 REG +12V(B) OUT / REG +12V(B) OUT / REG +12V(B) OUT / REG +12V(B) OUT / REG +12V(B) OUT / REG +12V(B) OUT / +12V(B) SENSE OUT / GND(B) SENSE / GND(B) / GND(B)

CN220 GND(B) / GND(B) / GND(B) / -12V(B) SENSE / REG 5V(E) / REG -12V(B) OUT / REG -12V(B) OUT / REG -12V(B) OUT / REG -12V(B) OUT / REG -12V(B) OUT

CN221 REG 5V(D) OUT / REG 5V(D) OUT / REG 5V(D) OUT / REG 5V(D) OUT / 5V(D) SENSE / GND(SENSE) / GND(D) / GND(D) / GND(D) / GND(D)

CN222 REG +12V OUT / GND / REG -12V OUT

RY1 THERMAL RELAY

95 HIGHER THAN 80°C

C1 4700 160V

C2 4700 160V

C3 22000 25V

C4 22000 25V

C5 10000 25V

C6 22000 16V

C7 22000 16V

SWITCHING REGULATOR

CN22

CN121 GND / UNREG 110V / GND / SW'ING REG OUT

CN106 AC 100V(X) OUT / AC 250V(X) OUT / AC 250V(Z) OUT / AC 250V(Y) OUT

AC150V

M8 FAN MOTOR

16P TERMINAL

CN103-5 CN103-8 CN103-2 CN103-1 CN103-4 CN103-7

CN233-3 CN233-6 CN233-1 CN233-4

REG-4 BOARD

CN252 CN251

C12 47 350V

C13 47 350V

BD BOARD

CN262 CN261 CN263 CN264

CN402-1 CN402-3

CN3 REMOTE IN (FEMALE)

RY2 THERMAL RELAY

95 HIGHER THAN 80°C

CN231 UNREG 110V IN / GND

CN232 UNREG 18V IN / GND

CN233 REG 12V(B) IN / REG 12V(B) IN / UNREG 10V IN / UNREG 10V IN / GND / GND

CN234 Q14 2SC1114 90V REG / Q8 2SC1114 90V REG / Q9 2SC1114 90V REG

CN235 Q10 2SC1403 12V REG

CN236 Q11 2SC1403 5V REG / Q12 2SC1403 5V REG / Q13 2SC1403 5V REG

CN237

CN103-15-0	GND(C)
CN103-13-3	REG 12V(C) OUT
CN103-14-2	REG 12V(B) OUT
CN103-12-9	GND
CN103-9-7	REG 90V OUT
CN103-6-6	UNREG 110V OUT

CN238

CN501-27-49	5V(E) SENSE
CN501-16-4	REG 5V(E) OUT
CN501-15-4	REG 5V(E) OUT
CN501-14-4	REG 5V(E) OUT
CN501-13-4	REG 5V(E) OUT
6	

CN239

CN501-45-8	GND(E)
CN501-44-8	GND(E)
CN501-43-8	GND(E)
CN501-42-8	GND(E)
CN220-5-96	REG 5V(E) OUT
CN501-28-89	GND(E) SENSE

CN101 SPEED VOL(LOCAL) / REG +12V / REG 5V(D) OUT / GND(B) / REG 5V(D) OUT / GND(B) / POWER RESET OUT / REG -12V(B) OUT / GND(D) / GND(D)

TO CONTROL BLOCK

CN103 AC REEL 60Hz(X) / AC REEL 50Hz(X) / AC REEL(Y) / FAN MOTOR(X) / FAN MOTOR(Y) / UNREG 110V OUT / FAN MOTOR(X) / FAN MOTOR(Y) / REG 90V OUT / SW'ING REG OUT / GND / GND / REG 12V(C) OUT / REG 12V(B) OUT / GND(C)

CN104 REG +12V(B) OUT / GND(B) / REG -12V(B) OUT / REG 5V(D) OUT / GND(D) / REG +12V(B) OUT / GND(B) / REG -12V(B) OUT / REG 5V(D) OUT / GND(D) / CHASSIS GND

CN105 DRIVE OUT(X) / GND / DRIVE IN(G) / DRIVE OUT(G) / RETURN

TO TAPE TRANSPORT BLOCK

CN501 SELECTED SIGNAL IN / GND / GND / TIMER SIGNAL-L / SPEED VOL.(LOCAL) / CLOCK SW OUT / GND / GND / TIMER SIGNAL-R / SPEED VOL.(REMOTE) / CTL-1 OUT / GND / SPEED VOL.(SELECTED) / THERMO ALARM OUT / DT OFF / PGM JOG EN SIG / GND / CAP.MOTOR VOLTAGE SEL / AC REFERENCE OUT / POWER ON MUTING OUT / REG +12V(A) OUT / REG +12V(B) OUT / REG +12V(B) SENSE OUT / REG 5V(E) OUT / REG 5V(E) OUT / REG 5V(E) OUT / GND(A) / GND(B) SENSE / GND(B) / 5V(E) SENSE / GND(E) SENSE / CHASSIS GND / POWER RESET OUT / REG -12V(A) OUT / REG -12V(B) OUT / REG -12V(B) SENSE / GND(E) / GND(E) / GND(E) / GND(E)

TO AMP CHASSIS BLOCK

POWER SUPPLY BLOCK

BVH-1100A / 1100APS / 1100APM
S/N 20001 AND UP

FRAME WIRING FUNCTION CONTROL BLOCK

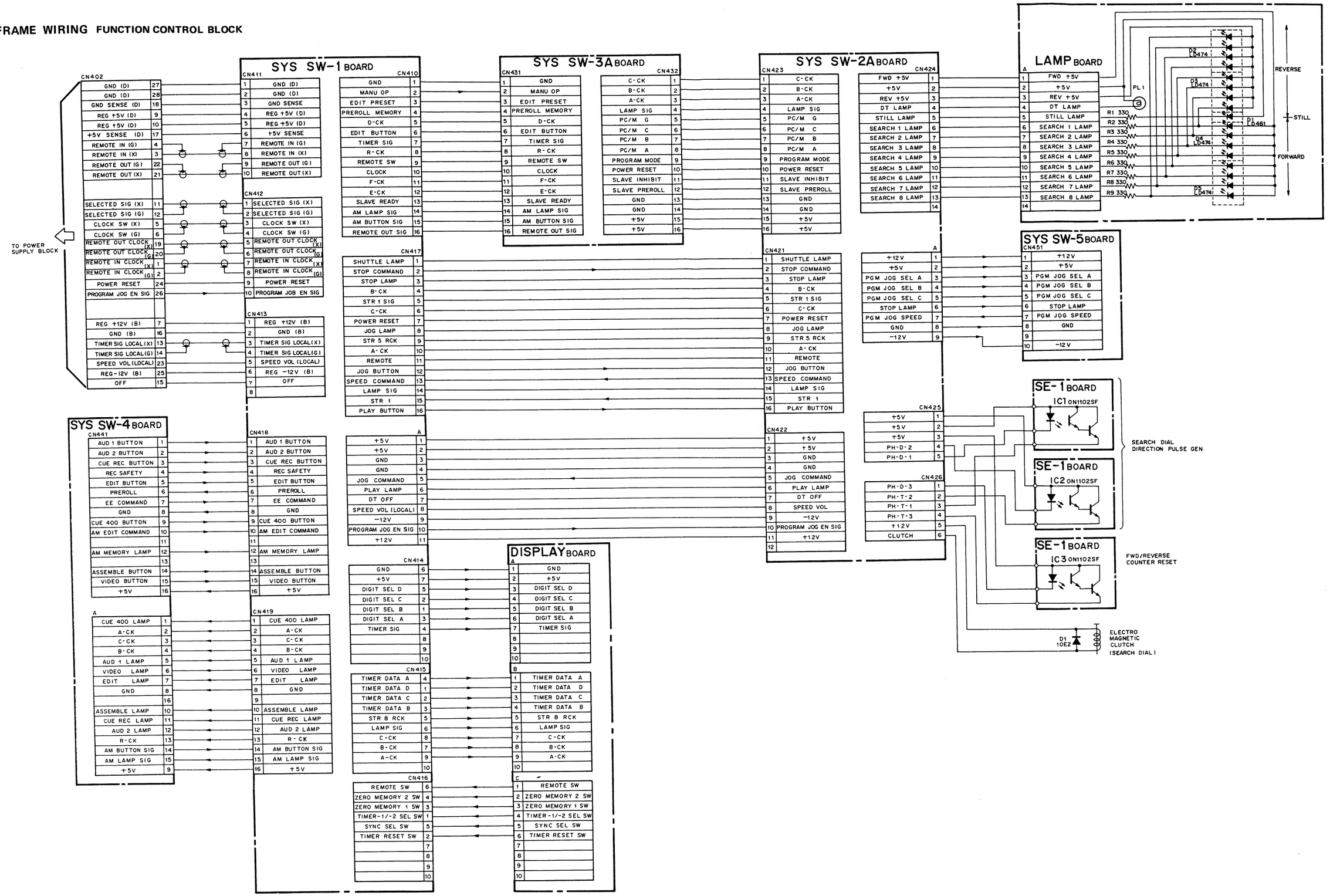

FRAME ; LEVEL CONTROL

FRAME ; LEVEL CONTROL

AUDIO SELECT BOARD — *COMPONENT SIDE* —

NEW #20101 –

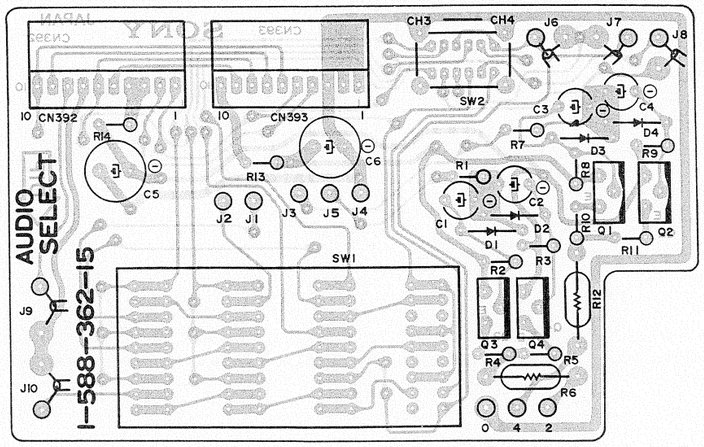

WFM SELECT BOARD — *COMPONENT SIDE* —

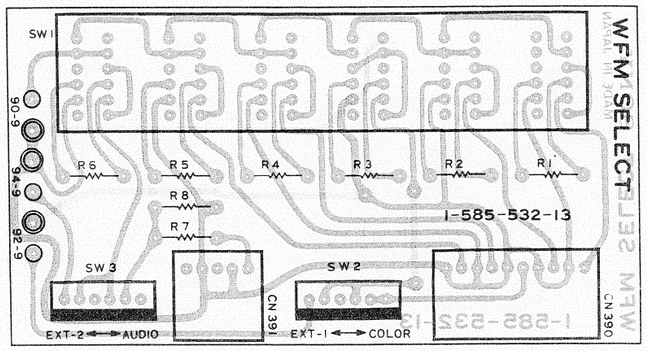

FRAME WIRING ; LEVEL CONTROL BLOCK

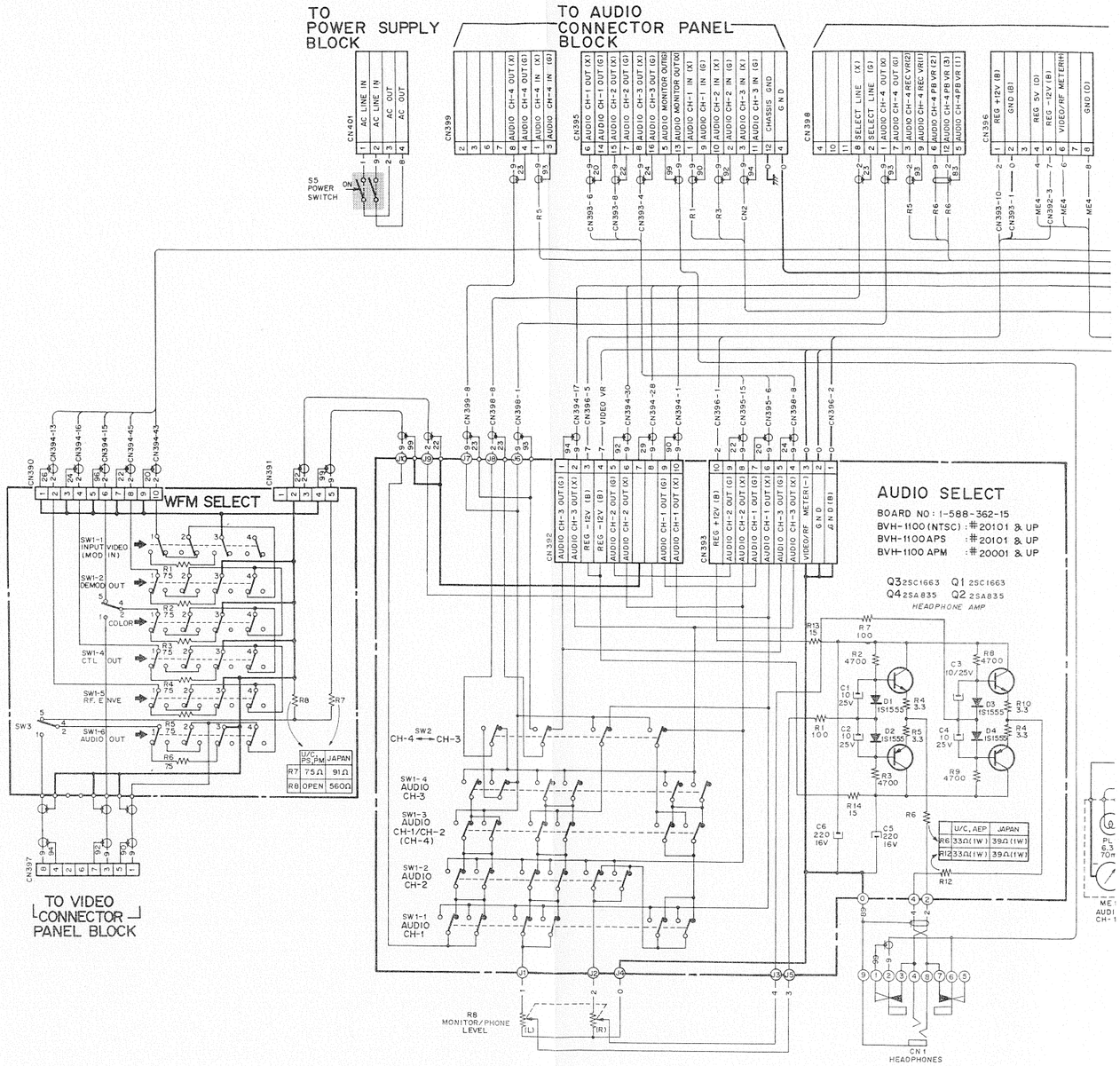

FRAME ; LEVEL CONTROL　　FRAME ; LEVEL CONTROL

TO TAPE TRANSPORT BLOCK

CN396

1	REG +12V (B)
2	GND (B)
3	REG 5V (D)
4	REG -12V (B)
5	VIDEO/RF METER(+)
6	GND (D)

CN394

64	CHASSIS GND
63	VIDEO(X)
62	VIDEO(G)
61	VIDEO OUT 3 (X)
60	VIDEO OUT 3 (G)
59	COLOR OUT 1 (X)
58	COLOR OUT 1 (G)
57	CTL OUT-2 (X)
56	CTL OUT-2 (G)
55	RF ENVELOPE (X)
54	RF ENVELOPE (G)
53	AUDIO CH-1 OUT (X)
52	AUDIO CH-1 OUT (G)
51	AUDIO CH-2 OUT (X)
50	AUDIO CH-2 OUT (G)
49	AUDIO CH-3 OUT (X)
48	AUDIO CH-3 OUT (G)
47	
46	
45	AUDIO CH-1 METER(+)
44	AUDIO CH-1 METER(-)
43	AUDIO CH-2 METER(+)
42	AUDIO CH-2 METER(-)
41	AUDIO CH-3/4METER(+)
40	AUDIO CH-3/4METER(-)
39	AUDIO CH-1 REC VR(2)
38	AUDIO CH-1 REC VR(1)
37	AUDIO CH-2 REC VR(2)
36	AUDIO CH-2 REC VR(1)
35	AUDIO CH-1 PB VR(2)
34	AUDIO CH-1 PB VR(1)
33	AUDIO CH-2 PB VR(2)
32	AUDIO CH-2 PB VR(1)
31	AUDIO CH-3 PB VR(3)
30	AUDIO CH-3 PB VR(2)
29	AUDIO CH-3 PB VR(1)
28	VIDEO LEVEL CONTROL

AUDIO SELECT BOARD — *COMPONENT SIDE* —

FORMER
#20001 – 20099

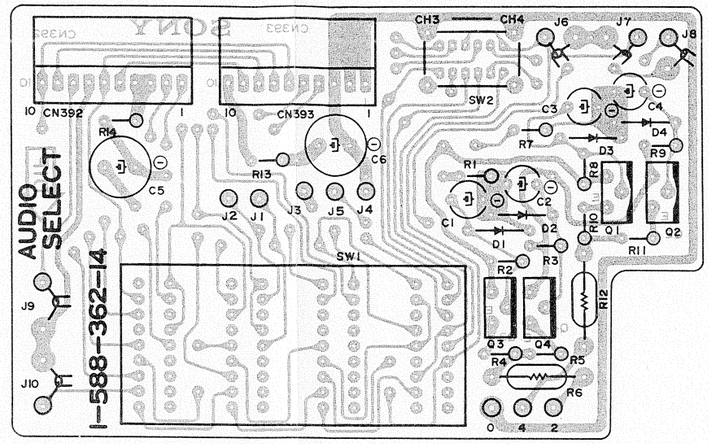

AUDIO SELECT BOARD

FORMER
#20001 – 20099

AUDIO SELECT

BOARD NO. 1-588-362-14
BVH-1100A(NTSC): UP TO #20099
BVH-1100APS : UP TO #20099

Q3 2SC1663　Q1 2SC1663
Q4 2SA835　Q2 2SA835
HEADPHONE AMP

	U/C,PS,PM	JAPAN
R6	33Ω(1W)	39Ω(1W)
R12	33Ω(1W)	39Ω(1W)

SW1-1 AUDIO CH-1
SW1-2 AUDIO CH-2
SW1-3 AUDIO CH-1/CH-2 (CH-4)
SW1-4 AUDIO CH-3
SW2 CH-4 ⟷ CH-3

R8-1 500 (L)
R8-2 500 (R)

MONITOR/PHONE LEVEL

CN1 HEADPHONES

DIO SELECT

'D 1-588-362-15
110 NTSC) : #20101 & UP
110 PS : #20101 & UP
1100 APM : #20001 & UP

2SC 3 Q1 2SC1663
2SA Q2 2SA835
H PHONE AMP

	U/C, AEP	JAPAN
R6	33Ω(1W)	39Ω(1W)
R12	33Ω(1W)	39Ω(1W)

PL1 6.3V 70mA — ME1 AUDIO CH-1
PL2 6.3V 70mA — ME2 AUDIO CH-2
PL3 6.3V 70mA — ME3 AUDIO CH-3 OR CH-4
PL4 6.3V 70mA — ME4 VIDEO/RF

CN 2 MIC IN

R1 5K(A) REC　R2 5K(A) PB — AUDIO CH-1
R3 5K(A) REC　R4 5K(A) PB — AUDIO CH-2
R5 SHORT　R6 OPEN — AUDIO CH-3
R5 5K(A) REC　R6 5K(A) PB — AUDIO CH-4
R7 10K(A) REC — VIDEO

BVH-1100APS(WITH AUDIO-4)

R5 5K(A) REC　R6 5K(A) PB — AUDIO CH-3
R7 10K(A) REC — VIDEO

BVH-1100A(NTSC)
BVH-1100APM
BVH-1100APS(WITHOUT AUDIO-4)

FRAME WIRING, LEVEL CONTROL (NTSC, PS, PM)

BVH-1100A(J) : #20001–
BVH-1100A(U/C) : #20001–
BVH-1100APS : #20001–
BVH-1100APM : #20001–

FRAME ; VIDEO CONNECTOR	FRAME ; VIDEO CONNECTOR

BUFFER BOARD – *COMPONENT SIDE* –

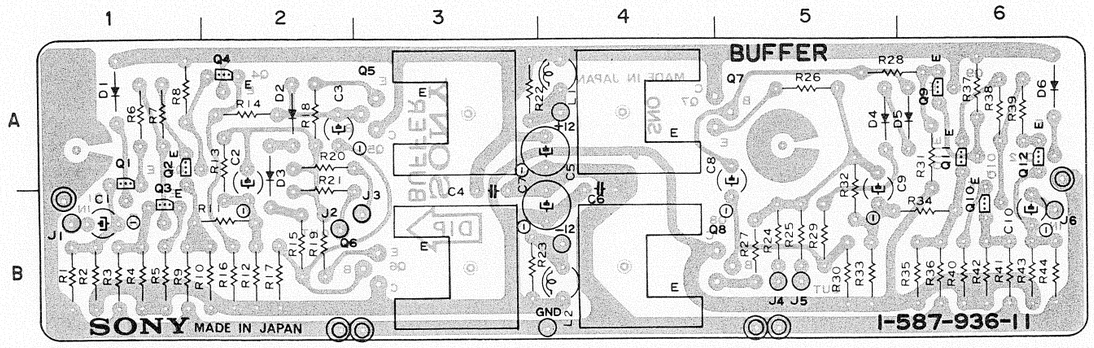

BVH-1100A (NTSC)
BVH-1100APS
BVH-1100APM
BUFFER BOARD

D1	A - 1
D2	A - 2
D3	A - 2
D4	A - 5
D5	A - 6
D6	A - 6
J1	B - 1
J2	B - 2
J3	B - 3
J4	B - 5
J5	B - 5
J6	B - 6
Q1	A - 1
Q2	A - 1
Q3	B - 1
Q4	A - 2
Q5	A - 3
Q6	B - 3
Q7	A - 4
Q8	B - 4
Q9	A - 6
Q10	B - 6
Q11	A - 6
Q12	A - 6

FRAME WIRING; VIDEO CONNECTOR PANEL BLOCK

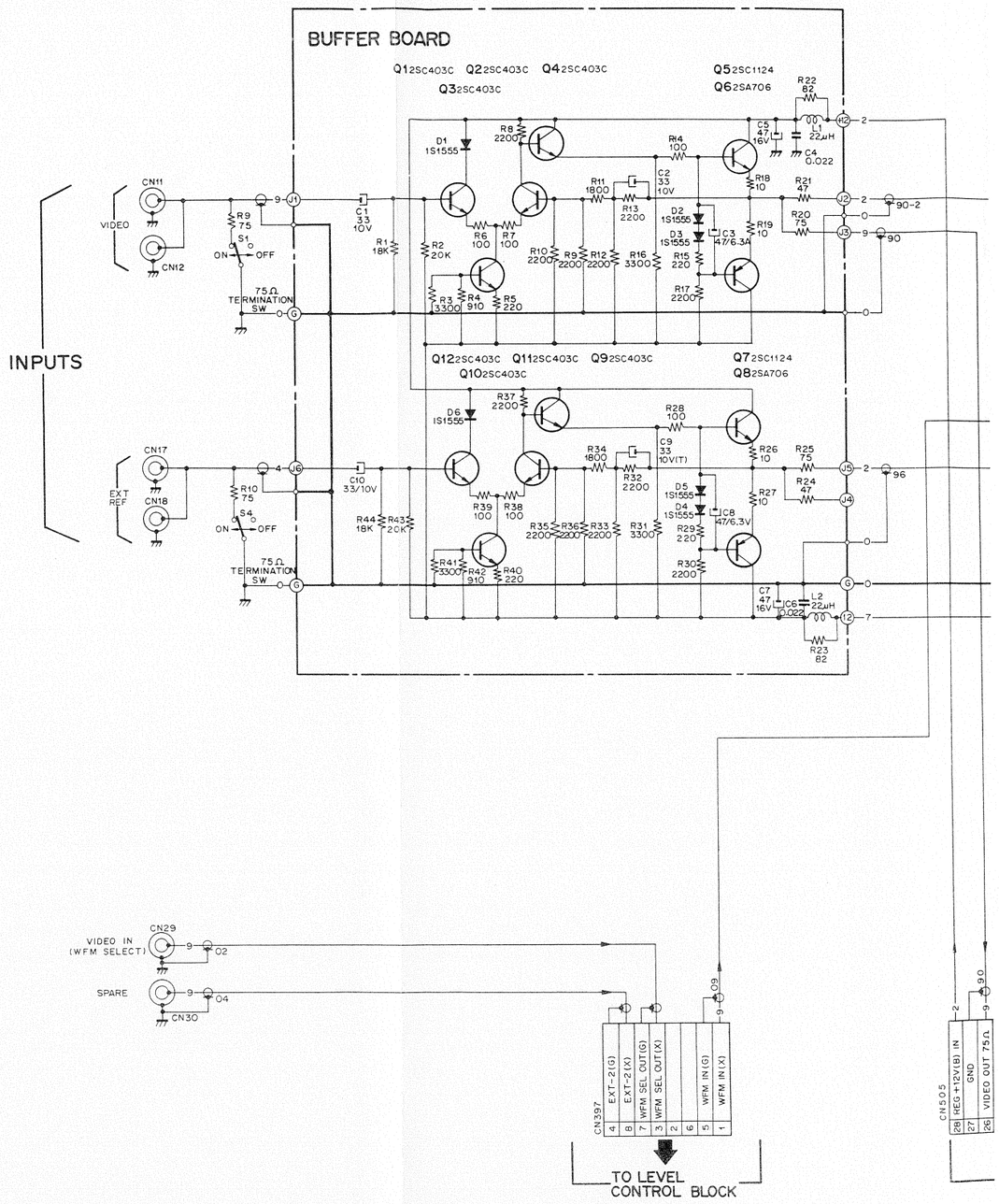

FRAME ; VIDEO CONNECTOR

FRAME WIRING; VIDEO CONNECTOR PANEL BLOCK

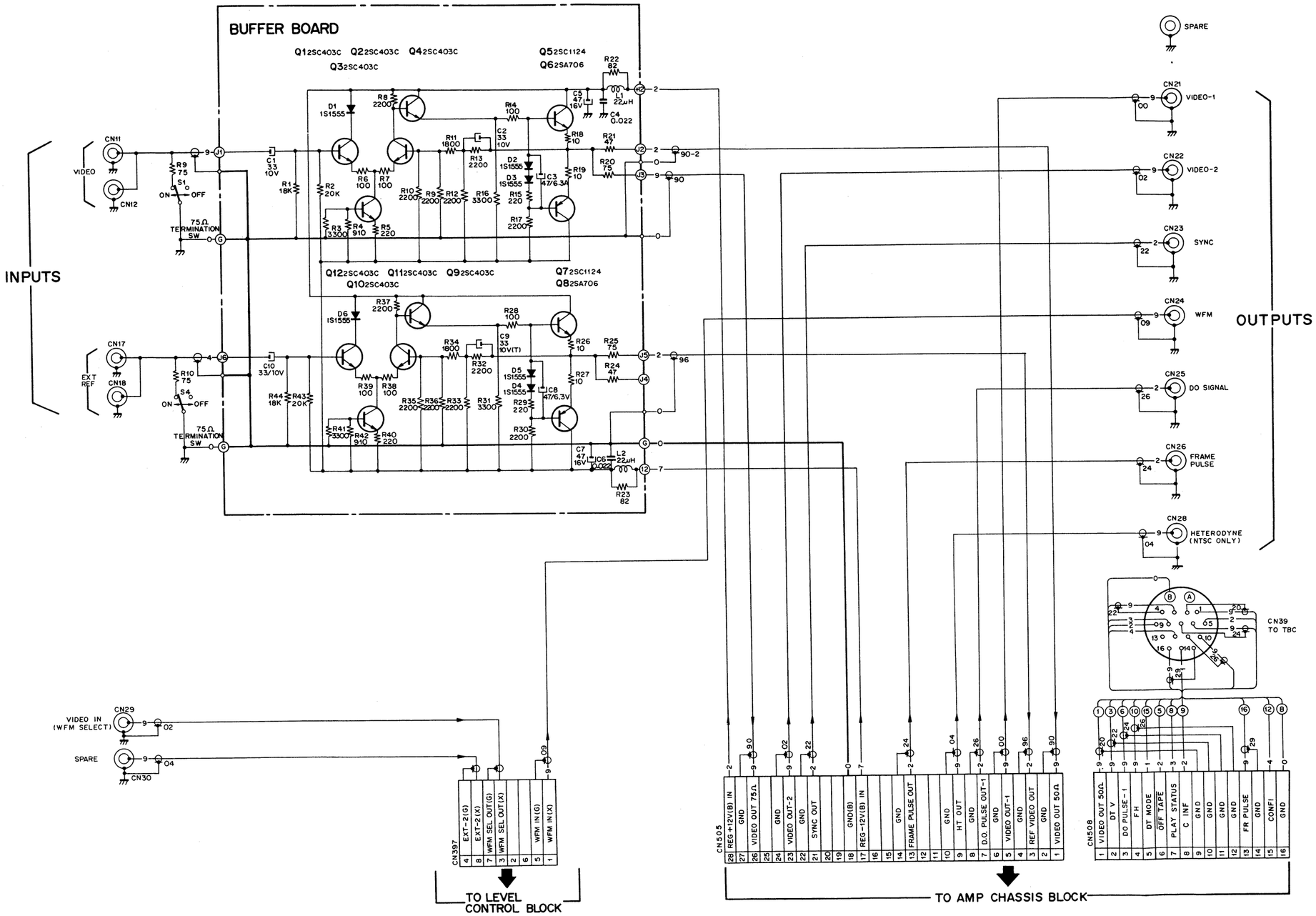

BVH-1100A (NTSC)
BVH-1100APS
BVH-1100APM
BUFFER BOARD

D1	A · 1
D2	A · 2
D3	A · 2
D4	A · 5
D5	A · 6
D6	A · 6
J1	B · 1
J2	B · 2
J3	B · 3
J4	B · 5
J5	B · 5
J6	B · 6
Q1	A · 1
Q2	A · 1
Q3	B · 1
Q4	A · 2
Q5	A · 3
Q6	B · 3
Q7	A · 4
Q8	B · 4
Q9	A · 6
Q10	B · 6
Q11	A · 6
Q12	A · 6

FRAME WIRING VIDEO CONNECTOR PANEL(NTSC, PS, PM)

BVH-1100A(J) : # 20001-
BVH-1100A(U/C) : # 20001-
BVH-1100APS : # 20001-
BVH-1100APM : # 20001-

FRAME ; HEAD DRUM ASS'Y

DRM-1 BOARD – *COMPONENT SIDE* –

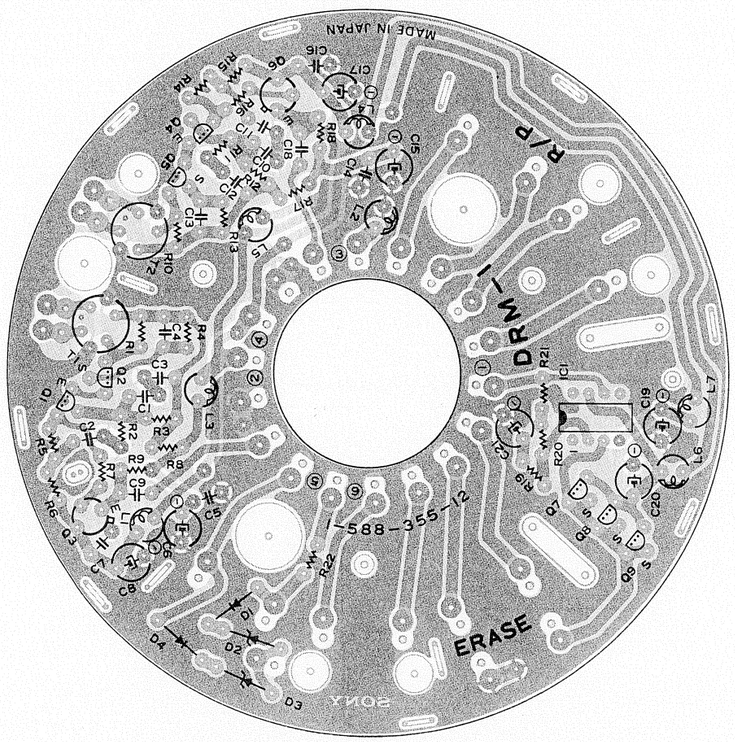

DRM-2 BOARD – *SOLDERING SIDE* –

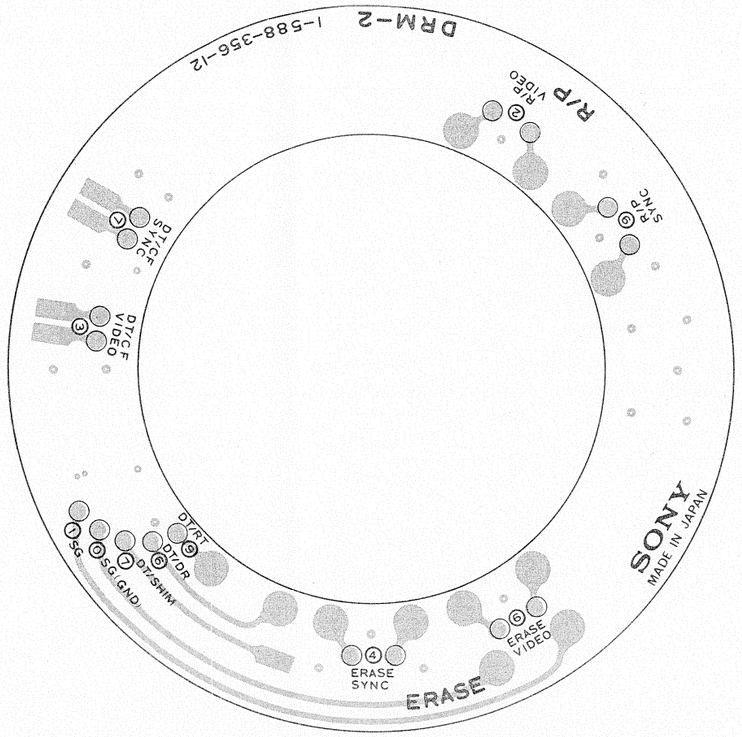

DRM-4 BOARD – *COMPONENT SIDE* –

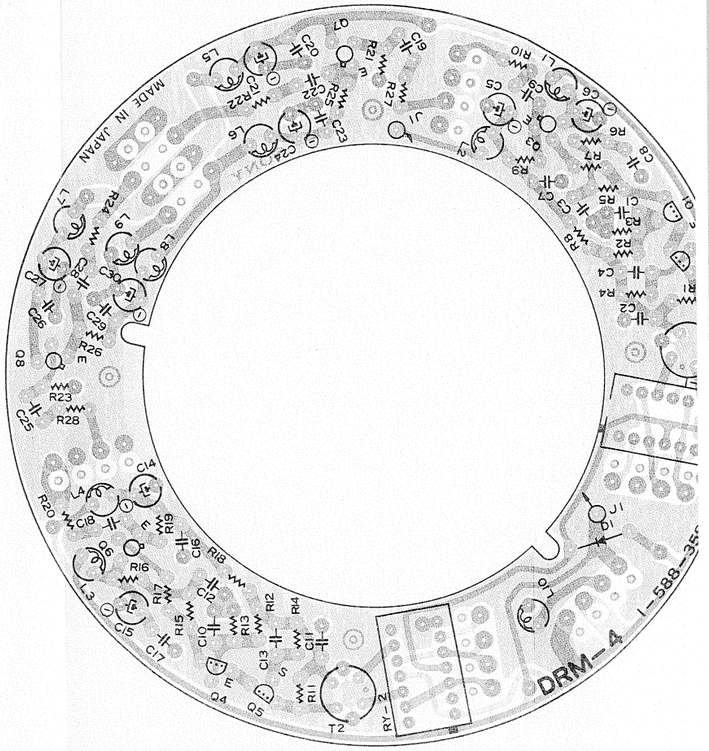

DRM-3 BOARD – *COMPONENT SIDE* –

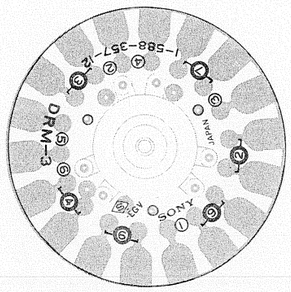

SRC-1 BOARD – *COMPONENT SIDE* –

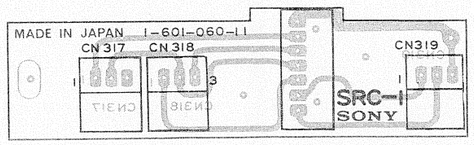

SRC-2 BOARD – *SOLDERING SIDE* –

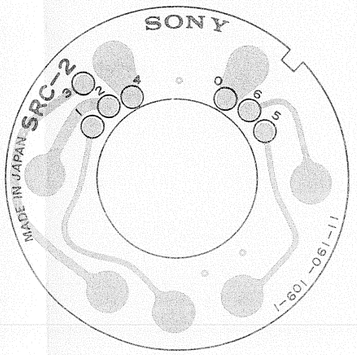

FRAME ; HEAD DRUM ASS'Y FRAME ; HEAD DRUM ASS'Y

NG SIDE –

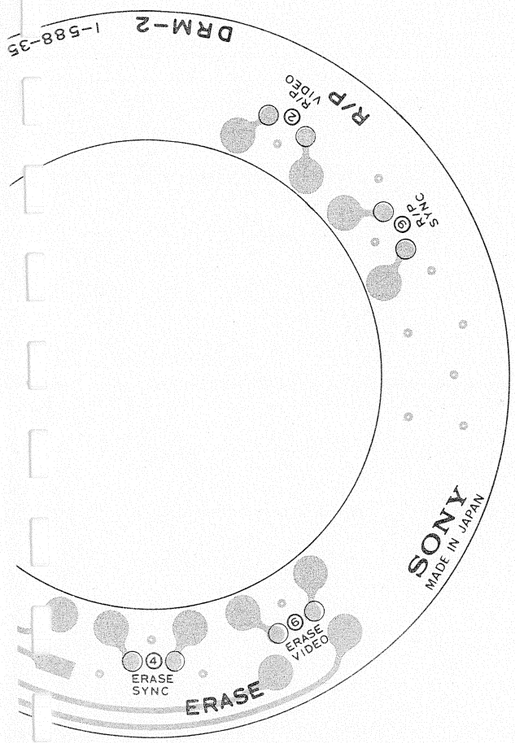

DRM-4 BOARD – *COMPONENT SIDE* –

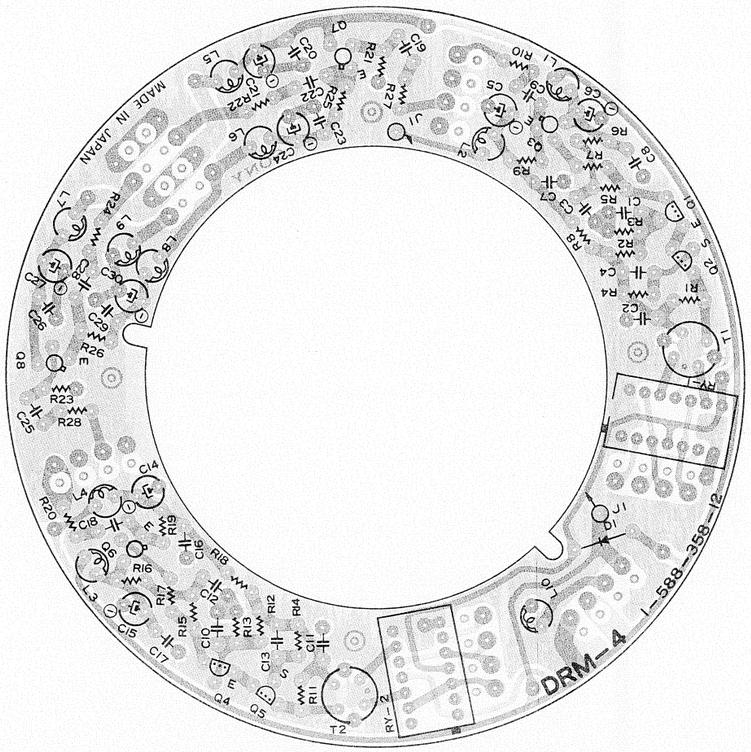

DRM-5 BOARD – *SOLDERING SIDE* –

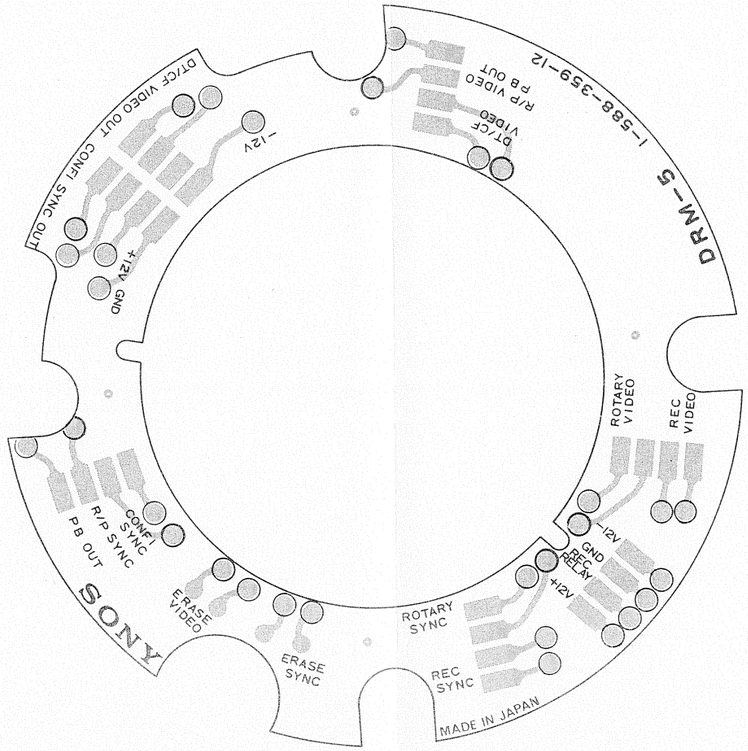

VT SIDE –

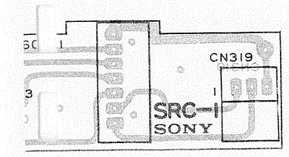

SRC-2 BOARD – *SOLDERING SIDE* –

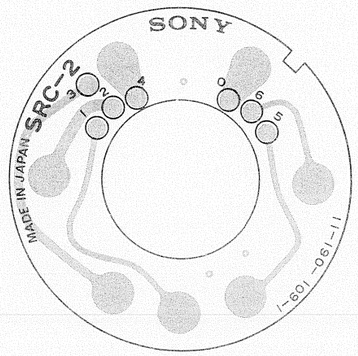

SRC-3 BOARD – *COMPONENT SIDE* –

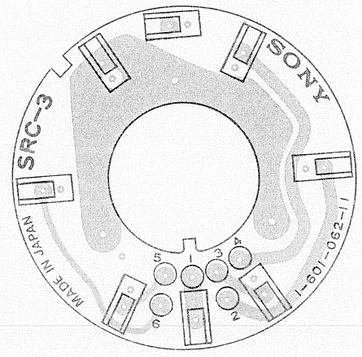

FRAME ; HEAD DRUM ASS'Y	FRAME ; HEAD DRUM ASS'Y

FRAME WIRING; HEAD DRUM ASS'Y BLOCK

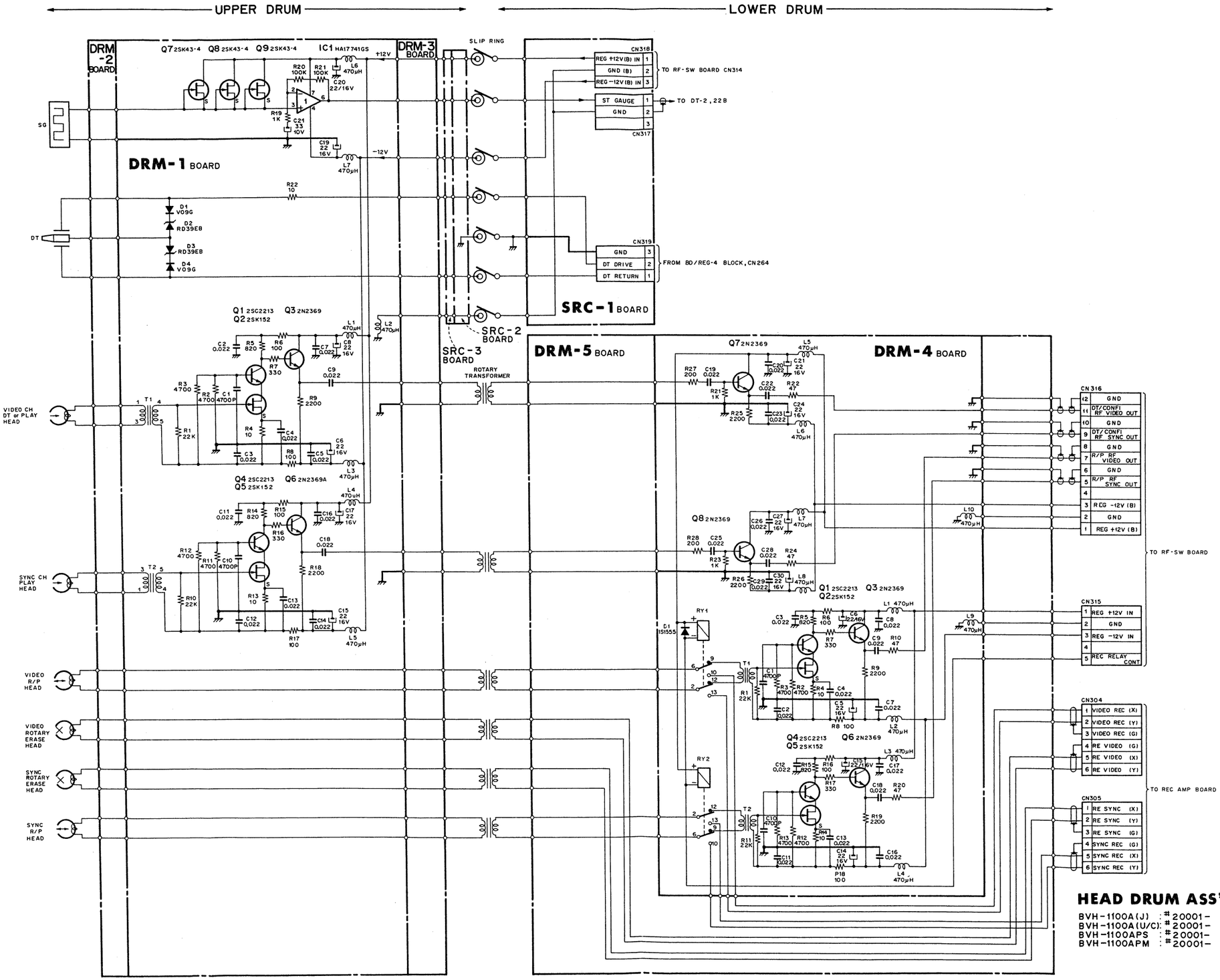

HEAD DRUM ASS'Y(NTSC,PS,PM)

BVH-1100A(J) : # 20001-
BVH-1100A(U/C): # 20001-
BVH-1100APS : # 20001-
BVH-1100APM : # 20001-

SECTION 22
SEMICONDUCTOR ELECTRODES

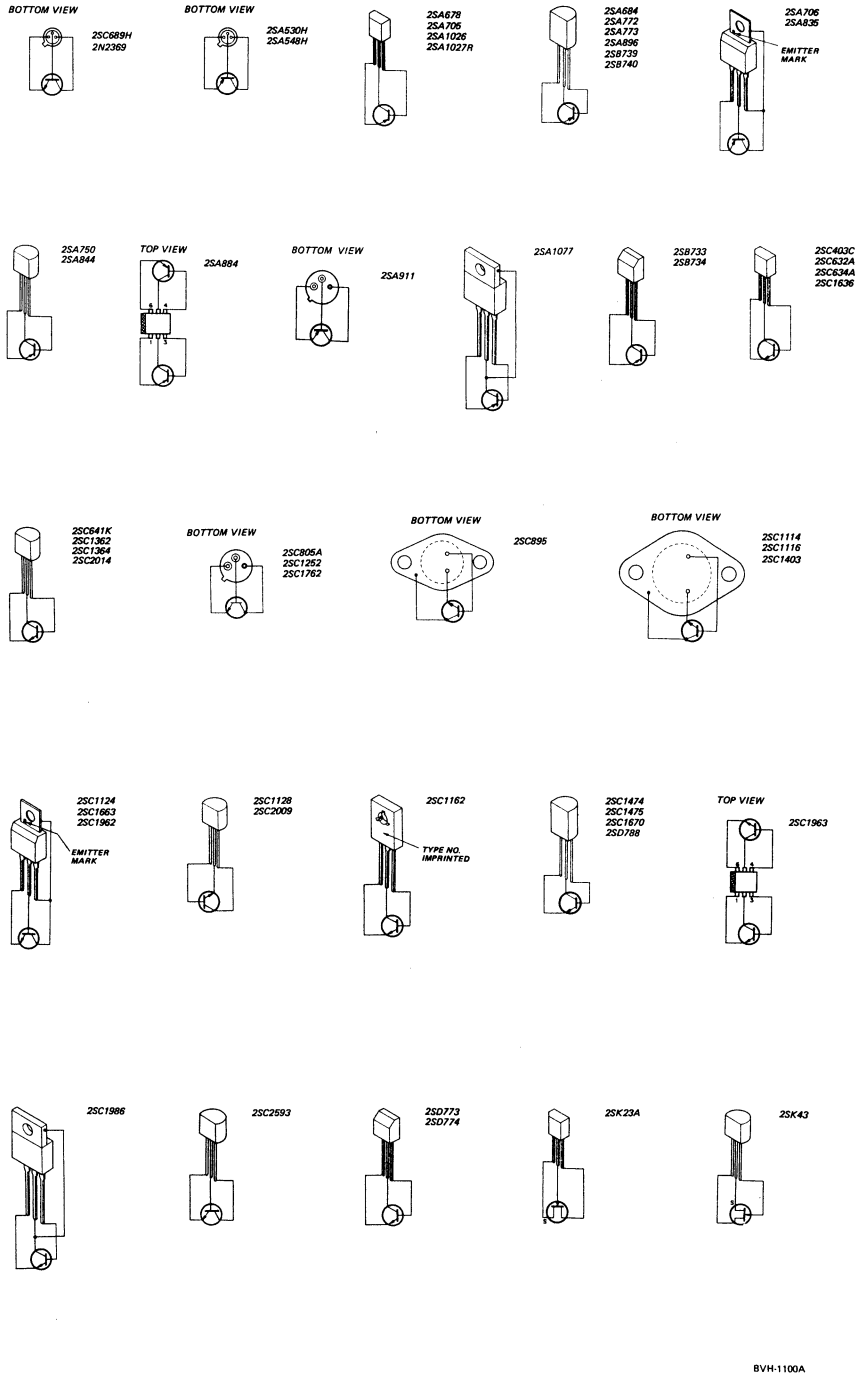

BVH-1100A

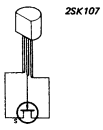

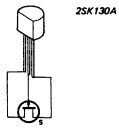

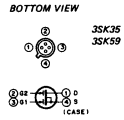

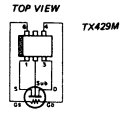

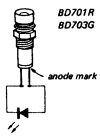

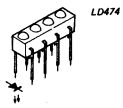

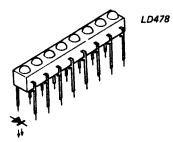

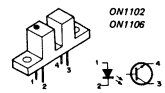

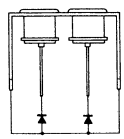

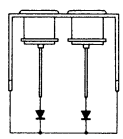

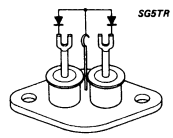

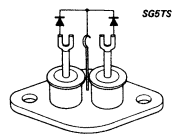

5082-7650 (HP)
7-SEGMENT LED
— TOP VIEW —

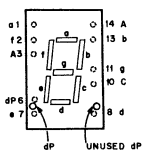

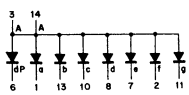

BVH-1100A

BX381 (SONY)
MFD 01A
PHASE COMPARATOR
- SIDE VIEW-

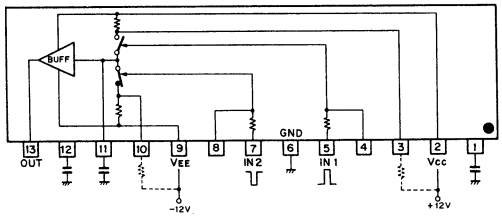

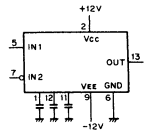

CA3054 (RCA)
DIFFERENTIAL AMPLIFIER
- TOP VIEW -

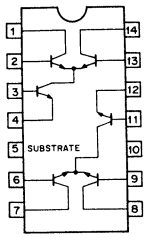

CX067 (SONY)
PEAK LEVEL DETECTOR & METER DRIVER
- TOP VIEW -

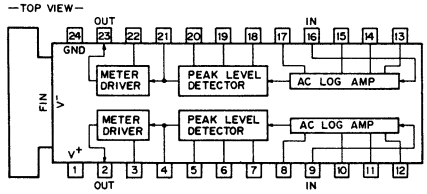

CX0461 (SONY)
AUDIO AMPLIFIER
- TOP VIEW -

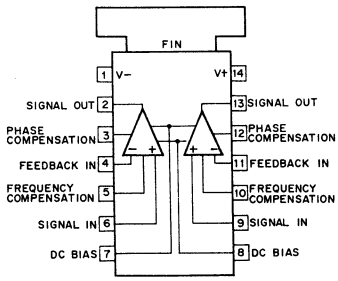

DAC-IC8BC (DATEL)
8-BIT DIGITAL-TO-ANALOG CONVERTER
- TOP VIEW -

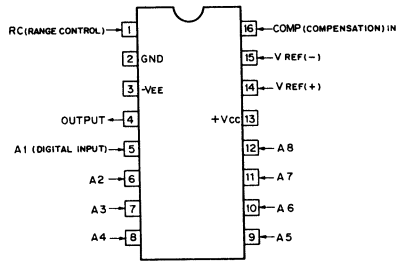

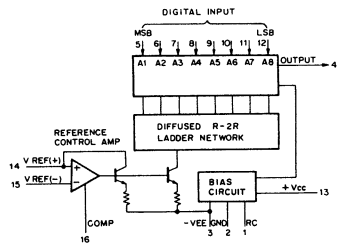

HA17458GS (HITACHI)
LM1458N (NSC)
OPERATIONAL AMPLIFIER
- TOP VIEW -

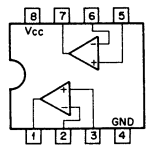

HA17741G (HITACHI)
μA741DC (FSC)
OPERATIONAL AMPLIFIER
- TOP VIEW -

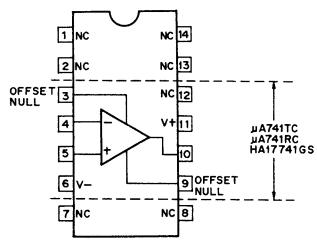

NOTE: μA741TC/RC, HA17741GS ARE RECOMMENDED FOR REPLACEMENT. THEIR PACKAGE IS 8-PIN DIL.

HA17747G (HITACHI)
μA747C (FSC)
DUAL OPERATIONAL AMPLIFIER
- TOP VIEW -

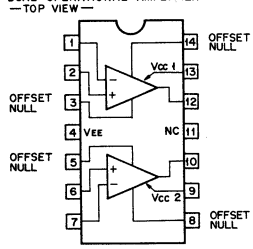

BVH-1100A

HD14053BP (HITACHI)
CD4053BE (RCA)
MC14053BCP (MOTOROLA)
μPD4053BC (NEC)

C-MOS 2-CHANNEL MULTIPLEXER / DEMULTIPLEXER

— TOP VIEW —

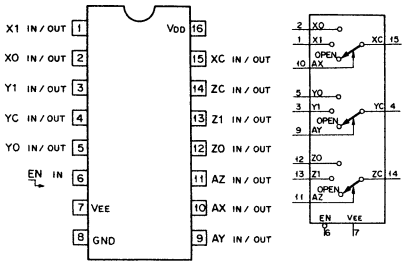

CONT. INPUTS		ON
EN	A (X, Y, Z)	CHANNEL
0	0	0
0	1	1
1	X	OPEN

HD75451AP (HITACHI)
SN75451BP (TI)

TTL PERIPHERAL POSITIVE-AND DRIVER WITH OPEN-COLLECTOR

— TOP VIEW —

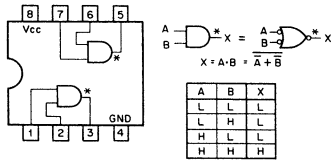

A	B	X
L	L	L
L	H	L
H	L	L
H	H	H

HD75452P (HITACHI)
SN75452BP (TI)

TTL PERIPHERAL POSITIVE-NAND DRIVER WITH OPEN-COLLECTOR

— TOP VIEW —

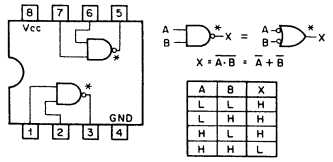

A	B	X
L	L	H
L	H	H
H	L	H
H	H	L

HD75453P (HITACHI)
SN75453BP (TI)

TTL PERIPHERAL POSITIVE-OR DRIVER WITH OPEN-COLLECTOR

— TOP VIEW —

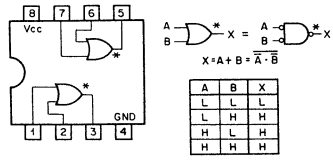

A	B	X
L	L	L
L	H	H
H	L	H
H	H	H

ICL8038BCPD (INTERSIL)
ICL8038CCPD (INTERSIL)

PRECISION WAVEFORM GENERATOR
VOLTAGE CONTROLLED OSCILLATOR

—TOP VIEW—

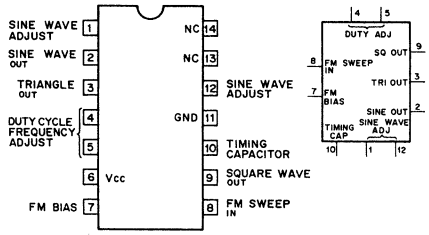

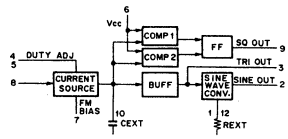

LM308H (NSC)

OPERATIONAL AMPLIFIER (HIGH INPUT IMPEDANCE)

— BOTTOM VIEW —

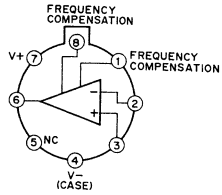

M5L2112AP-4 (MITSUBISHI)
2112A-4 (INTEL)

N-MOS 1024 BIT (256-WORD BY 4-BIT) STATIC RAM

— TOP VIEW —

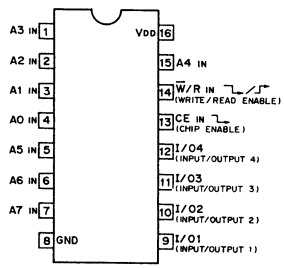

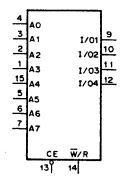

CE	W/R	FUNCTION	OUTPUTS
L	L	WRITE	HIGH IMPEDANCE
L	H	READ	DATA ENTERED
H	X	INHIBIT	HIGH IMPEDANCE

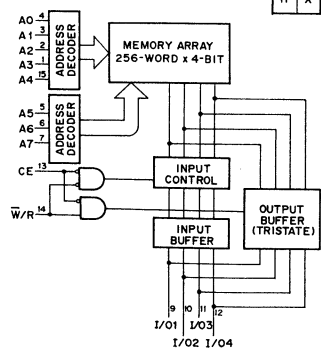

BVH-1100A

MC1445G (MOTOROLA)

GATE CONTROLLED WIDEBAND AMPLIFIER

VIDEO SWITCH
AGC
MULTIPLEXER
AMPLITUDE MODULATOR
BALANCED MODULATOR
PULSE-WIDTH MODULATOR
ANALOG SWITCH

—BOTTOM VIEW—

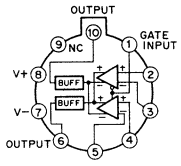

MC10116L (MOTOROLA)

ECL DIFFERENTIAL OR/NOR LINE RECEIVER

-TOP VIEW-

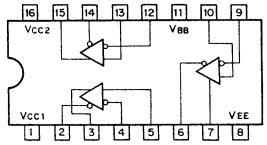

MC14046BCP (MOTOROLA)
CD4046AE/BE (RCA)

C-MOS PHASE LOCKED LOOP

—TOP VIEW—

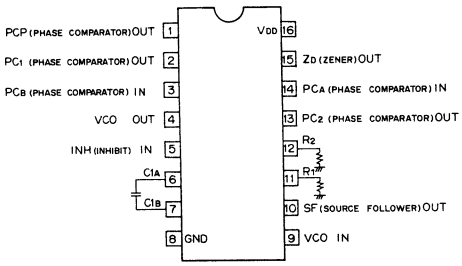

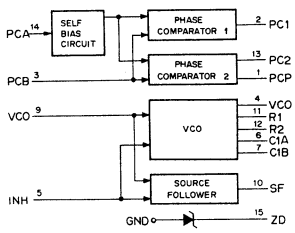

MC14070BCP (MOTOROLA)
CD4070BE (RCA)
MB84070B (FUJITSU)

C-MOS EXCLUSIVE OR GATE

— TOP VIEW —

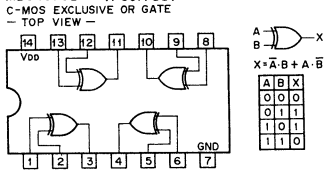

A	B	X
0	0	0
0	1	1
1	0	1
1	1	0

MC14077BCP (MOTOROLA)
CD4077BE (RCA)
MB84077B (FUJITSU)

C-MOS EXCLUSIVE NOR GATES

—TOP VIEW—

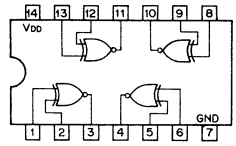

A	B	X
0	0	1
0	1	0
1	0	0
1	1	1

MC14175BCP (MOTOROLA)

C-MOS D-TYPE FLIP-FLOP

-TOP VIEW-

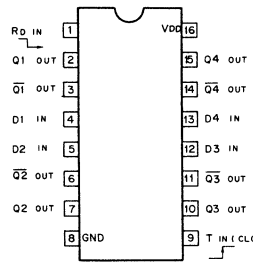

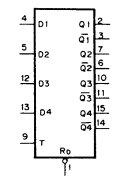

T	D	RD	Q	Q̄
↑	0	0	0	1
↑	1	0	1	0
↓	X	0	Q	Q̄
X	X	1	0	1

NO CHANGE

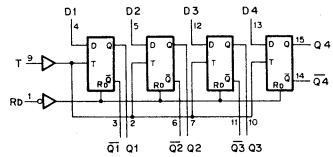

MC14526 BCP (MOTOROLA)

C-MOS PROGRAMMABLE DIVIDE-BY-N 4-BIT BINARY DOWN COUNTER

—TOP VIEW—

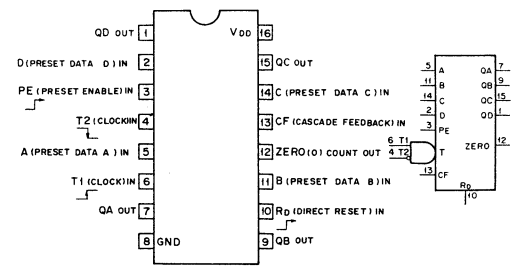

T1	T2	PE	RD	ACTION
0	0	0	0	NO COUNT
↓	0	0	0	COUNT ↑
X	↑	0	0	NO COUNT
↑	↓	0	0	COUNT ↓
X	X	1	0	PRESET
X	X	X	1	RESET

X = DON'T CARE
1 = HIGH LEVEL
0 = LOW LEVEL

COUNT	OUTPUTS				
	QD	QC	QB	QA	ZERO
15	1	1	1	1	0
14	1	1	1	0	0
13	1	1	0	1	0
12	1	1	0	0	0
11	1	0	1	1	0
10	1	0	1	0	0
9	1	0	0	1	0
8	1	0	0	0	0
7	0	1	1	1	0
6	0	1	1	0	0
5	0	1	0	1	0
4	0	1	0	0	0
3	0	0	1	1	0
2	0	0	1	0	0
1	0	0	0	1	0
0	0	0	0	0	1

8VH-1100A

MC14538BCP (MOTOROLA)

C-MOS DUAL RETRIGGERABLE/NON-RETRIGGERABLE MONOSTABLE MULTIVIBRATOR

-TOP VIEW-

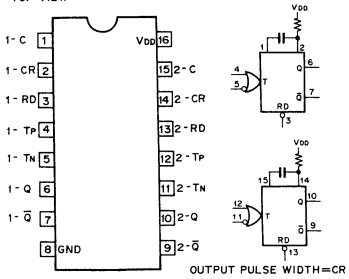

OUTPUT PULSE WIDTH=CR

RETRIGGERABLE M.M.V

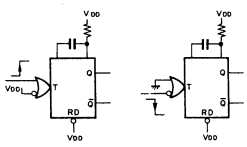

NON-RETRIGGERABLE M.M.V

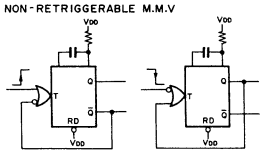

MC14551BCP (MOTOROLA)

C-MOS BILATERAL 2-CHANNEL ANALOG MULTIPLEXER/DEMULTIPLEXER

— TOP VIEW —

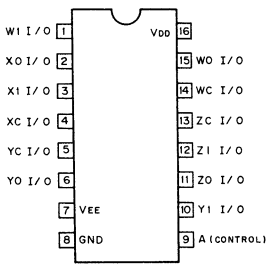

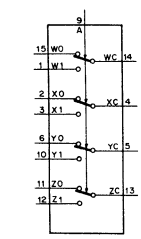

A(CONT)	ON CHANNEL
0	W0,XO,YO,ZO
1	W1,X1,Y1,Z1

MC14557BCP (MOTOROLA)

C-MOS 1-TO-64-BIT VARIABLE LENGTH SHIFT REGISTER

—TOP VIEW—

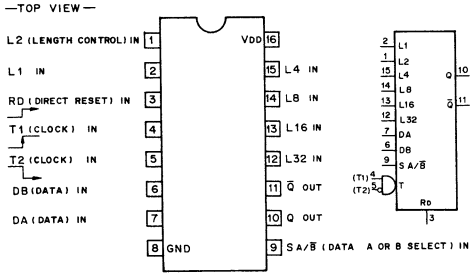

LENGTH SELECT TRUTH TABLE

L32	L16	L8	L4	L2	L1	REGISTER LENGTH
0	0	0	0	0	0	1-BIT
0	0	0	0	0	1	2-BIT
0	0	0	0	1	0	3-BIT
0	0	0	0	1	1	4-BIT
0	0	0	1	0	0	5-BIT
⋮	⋮	⋮	⋮	⋮	⋮	⋮
1	1	1	1	0	0	61-BIT
1	1	1	1	0	1	62-BIT
1	1	1	1	1	0	63-BIT
1	1	1	1	1	1	64-BIT

INPUTS					OUTPUT
RD	S A/B̄	T1	T2		Q
0	0	↓	0		DB
0	1	↓	0		DA
0	0	1	↑		DB
0	1	1	↑		DA
1	X	X	X		0

0 ; LOW
1 ; HIGH
X ; DON'T CARE

MC14584BCP (MOTOROLA)

C-MOS SCHMITT TRIGGER INVERTER

—TOP VIEW—

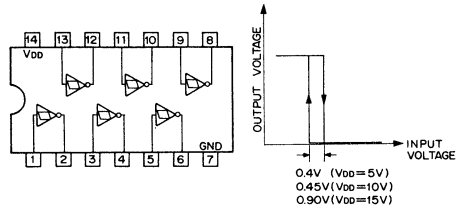

0.4V (VDD=5V)
0.45V(VDD=10V)
0.90V(VDD=15V)

MC14585BCP (MOTOROLA)

C-MOS 4-BIT MAGNITUDE COMPARATOR

—TOP VIEW—

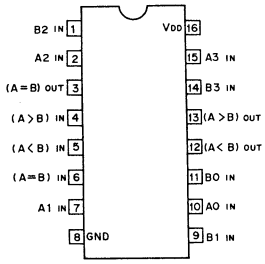

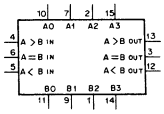

INPUTS								OUTPUTS		
DATA COMPARING					CASCADING					
	A3,B3	A2,B2	A1,B1	AO,BO	A<B	A=B	A>B	A<B	A=B	A>B
A>B	A3>B3	X	X	X	X	X	1	0	0	1
	A3=B3	A2>B2	X	X						
	A3=B3	A2=B2	A1>B1	X						
	A3=B3	A2=B2	A1=B1	AO>BO						
A=B	A3=B3	A2=B2	A1=B1	AO=BO	0	0	1	0	0	1
					0	1	X	0	1	0
					1	0	X	1	0	0
A< B	A3=B3	A2=B2	A1=B1	AO<BO	X	X	X	1	0	0
	A3=B3	A2=B2	A1<B1	X						
	A3=B3	A2<B2	X	X						
	A3<B3	X	X	X						

MM74C74N (NSC)

C-MOS D-TYPE FLIP FLOP WITH DIRECT SET/RESET

—TOP VIEW—

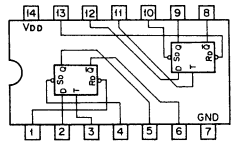

INPUTS				OUTPUTS	
So	Rd	T	D	Qn+1	Qn+1
L	H	X	X	H	L
H	L	X	X	L	H
L	L	X	X	H*	H*
H	H	↓	H	H	L
H	H	↓	L	L	H
H	H	L	X	Qn	Q̄n

*UNSTABLE

MM74C164N (NSC)

C-MOS 8-BIT PARALLEL-OUT SERIAL SHIFT REGISTER

—TOP VIEW—

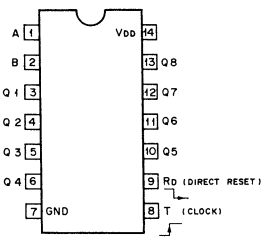

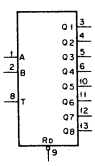

INPUTS				OUTPUTS				
Rd	T	A	B	Q1	Q2	····	Q8
L	X	X	X	L	L	L	L
H	L	X	X	Q1o	Q2o	····	Q8o
H	↑	H	H	H	Q1n	····	Q7n
H	↑	L	X	L	Q1n	····	Q7n
H	↑	X	L	L	Q1n	····	Q7n

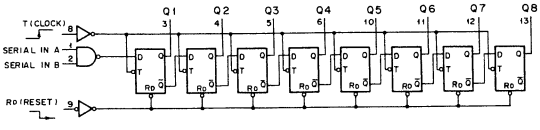

BVH-1100A

MM74C221N (NSC)
C-MOS DUAL MONOSTABLE MULTIVIBRATOR
— TOP VIEW —

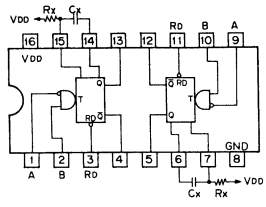

INPUTS			OUTPUTS	
Ro	A	B	Q	$\bar{Q}$
L	X	X	L	H
X	H	X	L	H
X	X	L	L	H
H	L	↓	⊓	⊔
H	⊔	H	⊓	⊔

$Tw = Cx \cdot Rx$

NE592K (SIGNETICS)
VIDEO AMPLIFIER
-TOP VIEW-

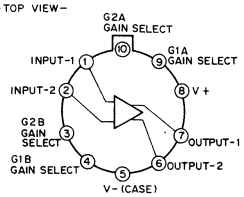

SN7400N (TI) M53200P (MITSUBISHI)
SN74LS00N (TI)
TTL NAND GATE
— TOP VIEW —

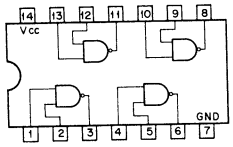

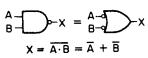

A	B	X
L	L	H
L	H	H
H	L	H
H	H	L

SN7402N (TI) M53202P (MITSUBISHI)
SN74S02N (TI)
SN74LS02N (TI)
TTL 2-INPUT POSITIVE-NOR GATE
— TOP VIEW —

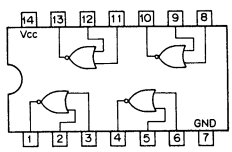

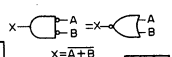

A	B	X
0	0	1
0	1	0
1	0	0
1	1	0

0: LOW LEVEL
1: HIGH LEVEL

SN7403N (TI),
SN74LS03N (TI),
TTL 2-INPUT POSITIVE-NAND GATE
WITH OPEN-COLLECTOR
— TOP VIEW —

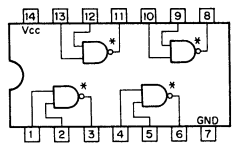

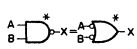

A	B	X
L	L	H
L	H	H
H	L	H
H	H	L

SN7404N (TI) M53204P (MITSUBISHI)
SN74LS04N (TI)
TTL INVERTER
— TOP VIEW —

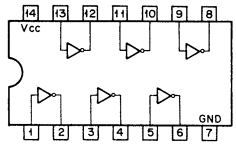

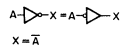

A	X
L	H
H	L

SN74LS05N (TI) SN7405N (TI)
TTL INVERTER WITH OPEN COLLECTOR
- TOP VIEW -

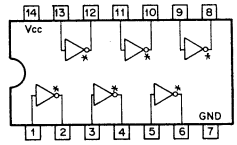

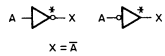

*; OPEN COLLECTOR MARK

SN7406N (TI) M53206P (MITSUBISHI)
TTL INVERTER BUFFER/DRIVER
WITH OPEN-COLLECTOR
— TOP VIEW —

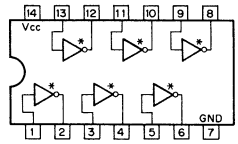

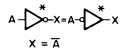

A	X
L	H
H	L

SN7407N (TI)
TTL BUFFER / DRIVER
WITH OPEN - COLLECTOR
— TOP VIEW —

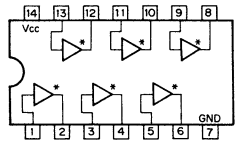

A	X
L	L
H	H

SN7408N (TI)
SN74LS08N (TI)
TTL 2-INPUT POSITIVE - AND GATE
— TOP VIEW —

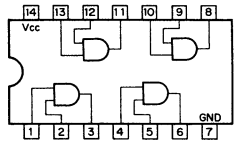

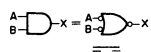

A	B	X
L	L	L
L	H	L
H	L	L
H	H	H

SN7410N (TI)
SN74LS10N (TI)
TTL 3-INPUT POSITIVE NAND GATE
— TOP VIEW —

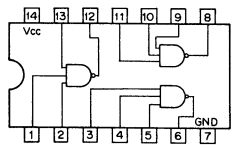

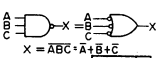

A	B	C	X
0	0	0	1
0	0	1	1
0	1	0	1
0	1	1	1
1	0	0	1
1	0	1	1
1	1	0	1
1	1	1	0

0: LOW LEVEL
1: HIGH LEVEL

BVH-1100A

SN74LS11N (TI)
TTL 3-INPUT POSITIVE-AND GATE
— TOP VIEW —

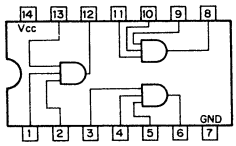

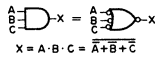

A	B	C	X
L	L	L	L
L	L	H	L
L	H	L	L
L	H	H	L
H	L	L	L
H	L	H	L
H	H	L	L
H	H	H	H

SN74LS14N (TI), SN7414N (TI)
TTL INVERTER SCHMITT TRIGGER
— TOP VIEW —

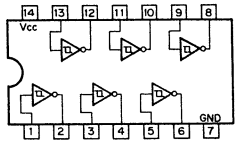

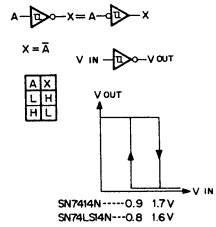

A	X
L	H
H	L

SN74LS15N (TI)
TTL 3-INPUT POSITIVE-AND GATE WITH OPEN-COLLECTOR
— TOP VIEW —

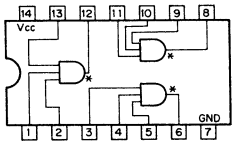

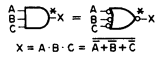

A	B	C	X
L	L	L	L
L	L	H	L
L	H	L	L
L	H	H	L
H	L	L	L
H	L	H	L
H	H	L	L
H	H	H	H

SN7420N (TI)
SN74LS20N (TI)
TTL 4-INPUT POSITIVE NAND GATE
—TOP VIEW—

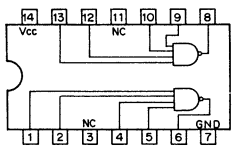

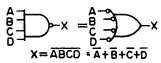

A	B	C	D	X
0	0	0	0	1
0	0	0	1	1
0	0	1	0	1
0	0	1	1	1
0	1	0	0	1
:	:	:	:	:
1	1	0	1	1
1	1	1	0	1
1	1	1	1	0

0;LOW LEVEL
1;HIGH LEVEL

SN74LS21N (TI)
TTL 4-INPUT POSITIVE AND GATE
—TOP VIEW—

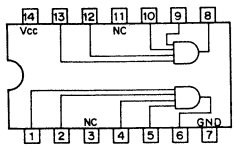

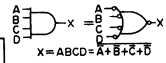

A	B	C	D	X
0	0	0	0	0
0	0	0	1	0
0	0	1	0	0
0	0	1	1	0
0	1	0	0	0
:	:	:	:	:
1	1	0	1	0
1	1	1	0	0
1	1	1	1	1

0;LOW LEVEL
1;HIGH LEVEL

SN7432N (TI),
SN74LS32N (TI)
TTL 2-INPUT POSITIVE-OR GATE
— TOP VIEW —

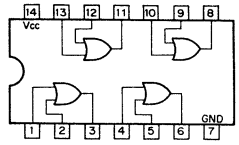

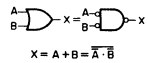

A	B	X
L	L	L
L	H	H
H	L	H
H	H	H

SN74LS33N (TI) SN7433N (TI)
TTL 2-INPUT POSITIVE-NOR GATE WITH OPEN-COLLECTOR
— TOP VIEW —

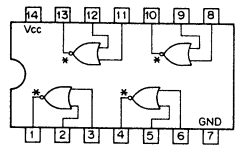

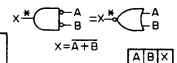

A	B	X
0	0	1
0	1	0
1	0	0
1	1	0

0:LOW LEVEL
1:HIGH LEVEL

SN7438N (TI),
SN74LS38N (TI)
TTL 2-INPUT POSITIVE-NAND GATE BUFFER
WITH OPEN-COLLECTOR
— TOP VIEW —

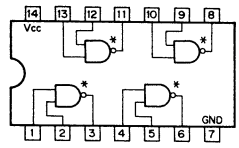

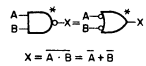

A	B	X
L	L	H
L	H	H
H	L	H
H	H	L

SN74LS42N (TI), SN7442AN (TI)
TTL BCD TO DECIMAL DECODER
— TOP VIEW —

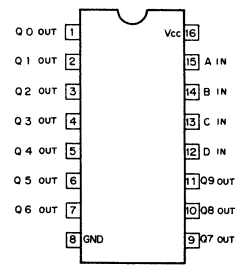

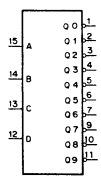

COUNT	INPUTS				OUTPUTS									
	D	C	B	A	Q9	Q8	Q7	Q6	Q5	Q4	Q3	Q2	Q1	Q0
0	0	0	0	0	1	1	1	1	1	1	1	1	1	0
1	0	0	0	1	1	1	1	1	1	1	1	1	0	1
2	0	0	1	0	1	1	1	1	1	1	1	0	1	1
3	0	0	1	1	1	1	1	1	1	1	0	1	1	1
4	0	1	0	0	1	1	1	1	1	0	1	1	1	1
5	0	1	0	1	1	1	1	1	0	1	1	1	1	1
6	0	1	1	0	1	1	1	0	1	1	1	1	1	1
7	0	1	1	1	1	1	0	1	1	1	1	1	1	1
8	1	0	0	0	1	0	1	1	1	1	1	1	1	1
9	1	0	0	1	0	1	1	1	1	1	1	1	1	1
INVALID	1	0	1	0	1	1	1	1	1	1	1	1	1	1
	1	0	1	1	1	1	1	1	1	1	1	1	1	1
	1	1	0	0	1	1	1	1	1	1	1	1	1	1
	1	1	0	1	1	1	1	1	1	1	1	1	1	1
	1	1	1	0	1	1	1	1	1	1	1	1	1	1
	1	1	1	1	1	1	1	1	1	1	1	1	1	1

0; LOW
1; HIGH

BVH-1100A

SN7447AN (TI)
TTL BCD-TO-SEVEN-SEGMENT DECODER/DRIVER
WITH OPEN COLLECTOR OUTPUT

—TOP VIEW—

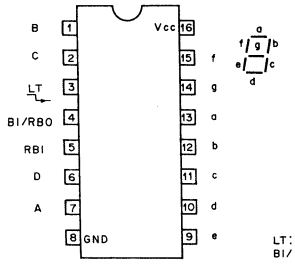

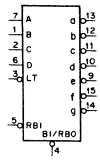

LT: LAMP TEST
BI/RBO: BLANKING IN/RIPPLE BLANKING OUT
RBI: RIPPLE BLANKING IN

INPUT						BI/RBO	OUTPUT							DISPLAY	DECIMAL
LT	RBI	D	C	B	A		a	b	c	d	e	f	g	HEXADECIMAL	
1	0	0	0	0	0	1	0	0	0	0	0	0	1	0	0
1	X	0	0	0	1	1	1	0	0	1	1	1	1	1	1
1	X	0	0	1	0	1	0	0	1	0	0	1	0	2	2
1	X	0	0	1	1	1	0	0	0	0	1	1	0	3	3
1	X	0	1	0	0	1	1	0	0	1	1	0	0	4	4
1	X	0	1	0	1	1	0	1	0	0	1	0	0	5	5
1	X	0	1	1	0	1	1	1	0	0	0	0	0	6	6
1	X	0	1	1	1	1	0	0	0	1	1	1	1	7	7
1	X	1	0	0	0	1	0	0	0	0	0	0	0	8	8
1	X	1	0	0	1	1	0	0	0	1	1	0	0	9	9
1	X	1	0	1	0	1	1	1	1	0	0	1	0	C	10
1	X	1	0	1	1	1	1	1	0	0	1	1	0	J	11
1	X	1	1	0	0	1	1	0	1	1	1	0	0	U	12
1	X	1	1	0	1	1	0	1	1	0	1	0	0	S	13
1	X	1	1	1	0	1	1	1	1	0	0	0	0	E	14
1	X	1	1	1	1	1	1	1	1	1	1	1	1	BLANK	15
X	X	X	X	X	X	0	1	1	1	1	1	1	1	BLANK	15
1	0	0	0	0	0	0*	1	1	1	1	1	1	1	BLANK	15
0	X	X	X	X	X	1	0	0	0	0	0	0	0	8	8
1	1	0	0	0	0	1	1	1	1	1	1	1	1	BLANK	15

* When RBI and inputs A, B, C, and D are at a low "0" level with the LT input high "H", all segment outputs go off ("1") and the RBO goes to a low "0" level (response condition).

SN74LS51N (TI)
TTL 2-WIDE 2-INPUT / 3-INPUT AND-OR-INVERT GATE
—TOP VIEW—

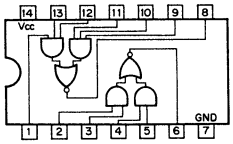

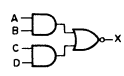

$X = \overline{A \cdot B + C \cdot D}$

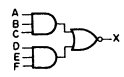

$X = \overline{A \cdot B \cdot C + D \cdot E \cdot F}$

SN7474N (TI) M53274P (MITSUBISHI)
SN74LS74AN (TI)
TTL D-TYPE FLIP FLOP WITH DIRECT SET/RESET
—TOP VIEW—

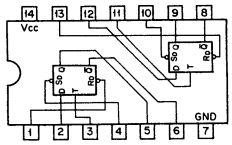

INPUTS				OUTPUTS	
$\overline{So}$	$\overline{Ro}$	T	D	Qn+1	$\overline{Qn+1}$
L	H	X	X	H	L
H	L	X	X	L	H
L	L	X	X	H*	H*
H	H	↓	H	H	L
H	H	↓	L	L	H
H	H	L	X	Qn	$\overline{Qn}$

* UNSTABLE

SN7475N (TI)
SN74LS75N (TI)
TTL BISTABLE LATCH
— TOP VIEW —

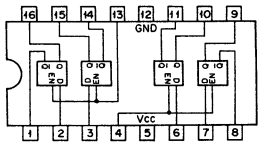

INPUTS		OUTPUTS	
D	EN	Q	$\overline{Q}$
L	H	L	H
H	H	H	L
X	L	Qo	$\overline{Qo}$

Qo; THE LEVEL OF Q BEFORE THE HIGH-TO-LOW TRANSITION OF INPUT EN

SN7486N (TI)
SN74S86N (TI)
SN74LS86N (TI)
TTL EXCLUSIVE OR GATE
— TOP VIEW —

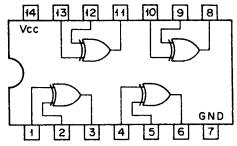

$X = \overline{A} \cdot B + A \cdot \overline{B}$

A	B	X
L	L	L
L	H	H
H	L	H
H	H	L

SN7489N (TI)
TTL 64-BIT (16-WORD BY 4-BIT) RAM
WITH OPEN-COLLECTOR OUTPUT
—TOP VIEW—

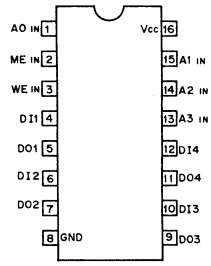

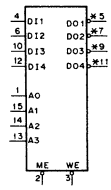

AO, A1, A2, A3 ; ADDRESS INPUTS
DI ; DATA INPUTS
DO ; DATA OUTPUTS
ME ; MEMORY ENABLE INPUT
WE ; WRITE ENABLE INPUT

ME	WE	FUNCTION	OUTPUTS
L	L	WRITE	$\overline{DI}$
L	H	READ	COMPLEMENT OF DATA ENTERED
H	L	INHIBIT STORAGE	$\overline{DI}$
H	H	DO NOTHING	OFF

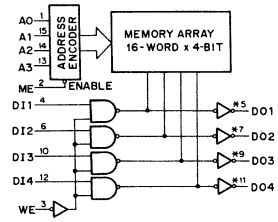

SN74LS92N (TI)
TTL DIVIDE-BY-2 AND DIVIDE-BY-6 COUNTER
—TOP VIEW—

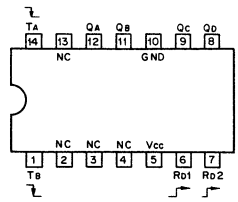

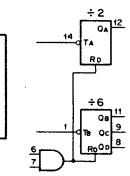

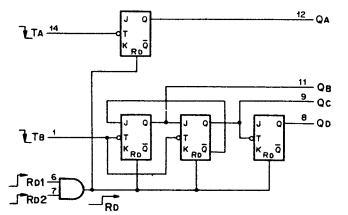

COUNT SEQUENCE

÷2 SECTION

COUNT	QA
0	0
1	1

÷6 SECTION

COUNT	QD	QC	QB
0	0	0	0
1	0	0	1
2	0	1	0
3	1	0	0
4	1	0	1
5	1	1	0

RESET/COUNT FUNCTION

RESET IN		OUTPUTS			
RD1	RD2	QD	QC	QB	QA
1	1	0	0	0	0
X	0	COUNT			
0	X	COUNT			

BVH-1100A

SN7495AN (TI)
SN74LS95BN (TI)

TTL 4-BIT PARALLEL IN/SERIAL IN SHIFT REGISTER

— TOP VIEW —

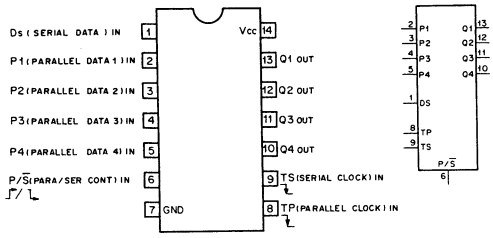

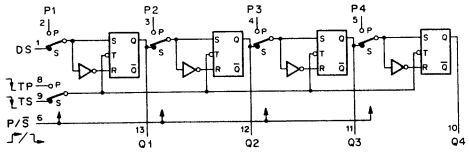

SN74107N (TI)
M53307P (MITSUBISHI)

TTL J-K FLIP FLOP WITH DIRECT RESET

— TOP VIEW —

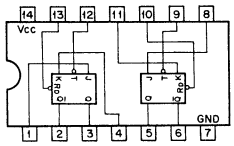

INPUTS				OUT
RD	T	J	K	Qn+1
L	X	X	X	L
H	↓	L	L	Qn
H	↓	L	H	L
H	↓	H	L	H
H	↓	H	H	$\overline{Qn}$

SN74LS107AN (TI)

TTL J-K FLIP FLOP WITH DIRECT RESET

— TOP VIEW —

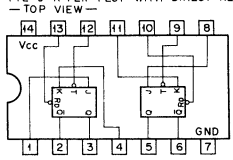

INPUTS				OUT
RD	T	J	K	Qn+1
L	X	X	X	L
H	↓	L	L	Qn
H	↓	L	H	L
H	↓	H	L	H
H	↓	H	H	$\overline{Qn}$
H	H	X	X	Qn

SN74109N (TI)
SN74LS109AN (TI)

TTL J-$\overline{K}$ FLIP-FLOP WITH DIRECT SET/RESET

— TOP VIEW —

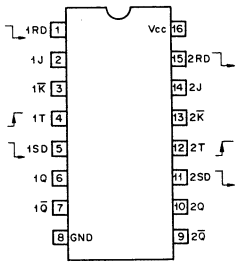

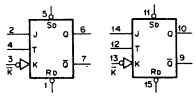

INPUTS					OUTPUTS	
SD	RD	T	J	$\overline{K}$	Qn+1	$\overline{Qn+1}$
L	H	X	X	X	H	L
H	L	X	X	X	L	H
L	L	X	X	X	H*	H*
H	H	↓	L	H	Qn	$\overline{Qn}$
			L	L	L	H
			H	H	H	L
			H	L	$\overline{Qn}$	Qn
H	H	L	X	X	Qn	$\overline{Qn}$

*;NONSTABLE

SN74S112N (TI)
SN74LS112AN (TI)

TTL J-K FLIP-FLOP WITH DIRECT SET/RESET

— TOP VIEW —

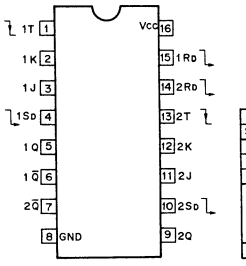

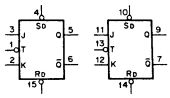

INPUTS					OUTPUTS	
SD	RD	T	J	K	Qn+1	$\overline{Qn+1}$
L	H	X	X	X	H	L
H	L	X	X	X	L	H
L	L	X	X	X	H*	H*
H	H	↓	L	L	Qn	$\overline{Qn}$
			L	H	L	H
			H	L	H	L
			H	H	$\overline{Qn}$	Qn
H	H	H	X	X	Qn	$\overline{Qn}$

*;NONSTABLE

SN74123N (TI)
SN74L123N (TI)
SN74LS123N (TI)
SN74LS123NS (TI) HD74LS123P (HITACHI)

TTL RETRIGGERABLE MONOSTABLE MULTIVIBRATOR WITH DIRECT RESET

— TOP VIEW —

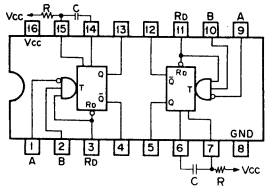

INPUTS			OUTPUTS	
Rd	A	B	Q	$\overline{Q}$
L	X	X	L	H
X	H	X	L	H
X	X	L	L	H
H	L	↑	⊓	⊔
H	↓	H	⊓	⊔
↑	L	H	⊓	⊔

OUTPUT PULSE WIDTH

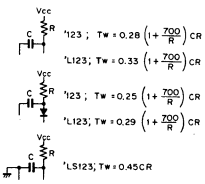

SN74LS124N (TI)
SN74S124N (TI)

TTL VOLTAGE-CONTROLLED OSCILLATOR

—TOP VIEW—

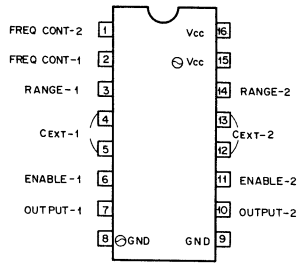

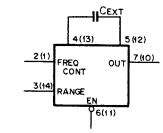

LS124: 0.12Hz~30MHz

$fo = \frac{1 \times 10^{-4}}{C_{EXT}}$ (Hz)

S124: 0.12Hz~85MHz

$fo = \frac{5 \times 10^{4}}{C_{EXT}}$ (Hz)

SN74S132N (TI)
SN74132N (TI)
M53332P (MITSUBISHI)

TTL 2-INPUT NAND SCHMITT TRIGGER

— TOP VIEW —

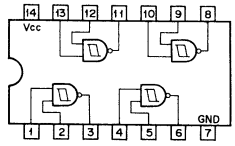

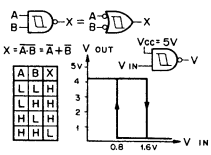

A	B	X
L	L	H
L	H	H
H	L	H
H	H	L

SN74145N (TI)
SN74LS145N (TI)

TTL BCD-TO-DECIMAL DECODER/DRIVER

— TOP VIEW —

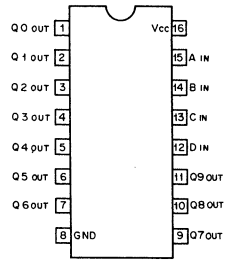

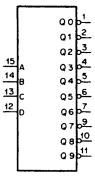

STATE	INPUTS				OUTPUTS								
	D	C	B	A	Q0	Q1	Q2	Q3	Q4	Q5	Q6	Q7	Q8	Q9
0	0	0	0	0	0	1	1	1	1	1	1	1	1	1
1	0	0	0	1	1	0	1	1	1	1	1	1	1	1
2	0	0	1	0	1	1	0	1	1	1	1	1	1	1
3	0	0	1	1	1	1	1	0	1	1	1	1	1	1
4	0	1	0	0	1	1	1	1	0	1	1	1	1	1
5	0	1	0	1	1	1	1	1	1	0	1	1	1	1
6	0	1	1	0	1	1	1	1	1	1	0	1	1	1
7	0	1	1	1	1	1	1	1	1	1	1	0	1	1
8	1	0	0	0	1	1	1	1	1	1	1	1	0	1
9	1	0	0	1	1	1	1	1	1	1	1	1	1	0
INVALID	1	0	1	0	1	1	1	1	1	1	1	1	1	1
	1	0	1	1	1	1	1	1	1	1	1	1	1	1
	1	1	0	0	1	1	1	1	1	1	1	1	1	1
	1	1	0	1	1	1	1	1	1	1	1	1	1	1
	1	1	1	0	1	1	1	1	1	1	1	1	1	1
	1	1	1	1	1	1	1	1	1	1	1	1	1	1

BVH-1100A

SN74148N (TI)
SN74LS148N (TI)

TTL 8-LINE-TO-3-LINE ENCODER

— TOP VIEW —

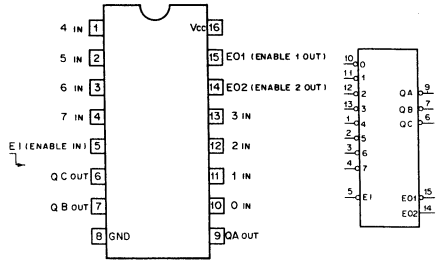

INPUTS								OUTPUTS				
EI	7	6	5	4	3	2	1	0	QC	QB	QA	EO1	EO2
1	X	X	X	X	X	X	X	X	1	1	1	1	1
0	1	1	1	1	1	1	1	1	1	1	1	0	1
0	1	1	1	1	1	1	1	0	1	1	1	1	0
0	1	1	1	1	1	1	0	X	1	1	0	1	0
0	1	1	1	1	1	0	X	X	1	0	1	1	0
0	1	1	1	1	0	X	X	X	1	0	0	1	0
0	1	1	1	0	X	X	X	X	0	1	1	1	0
0	1	1	0	X	X	X	X	X	0	1	0	1	0
0	1	0	X	X	X	X	X	X	0	0	1	1	0
0	0	X	X	X	X	X	X	X	0	0	0	1	0

SN74157N (TI)
SN74LS157N (TI)

TTL 2-LINE-TO-1-LINE DATA SELECTOR/MULTIPLEXER

— TOP VIEW —

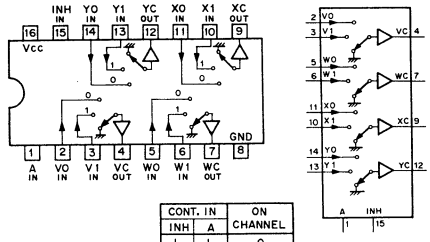

CONT. IN		ON CHANNEL
INH	A	
L	L	0
L	H	1
H	X	GND

SN74LS158N (TI)

TTL 2-LINE-TO-1-LINE INVERTED DATA SELECTOR/MULTIPLEXER

— TOP VIEW —

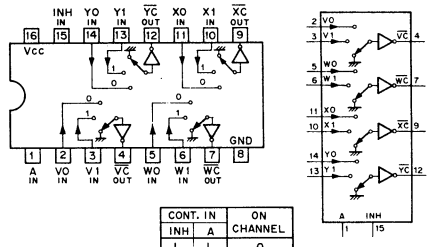

CONT. IN		ON CHANNEL
INH	A	
L	L	0
L	H	1
H	X	GND

SN74151AN (TI)
SN74LS151N (TI)

TTL 8-LINE-TO-1-LINE DATA SELECTOR/MULTIPLEXER

— TOP VIEW —

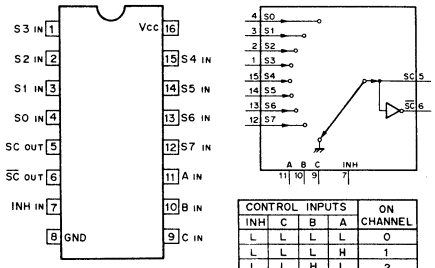

CONTROL INPUTS				ON CHANNEL
INH	C	B	A	
L	L	L	L	0
L	L	L	H	1
L	L	H	L	2
L	L	H	H	3
L	H	L	L	4
L	H	L	H	5
L	H	H	L	6
L	H	H	H	7
H	X	X	X	GND

SN74161N (TI)
SN74LS161AN (TI) HD74LS161P (HITACHI)

TTL PRESETTABLE SYNCHRONOUS 4-BIT BINARY COUNTER

— TOP VIEW —

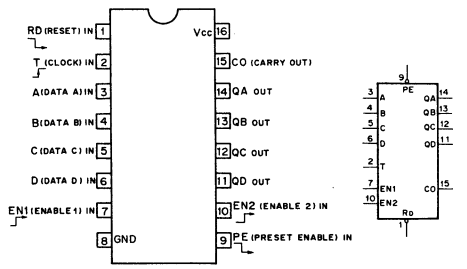

MODE SELECTION

CONTROL INPUTS				MODE
Ro	PE	EN1	EN2	
0	X	X	X	RESET (ASYNCHRONOUS)
1	0	X	X	PRESET (SYNCHRONOUS)
1	1	0	X	NO COUNT
1	1	X	0	NO COUNT
1	1	1	1	COUNT

COUNT SEQUENCE

COUNT	OUTPUTS			
	QD	QC	QB	QA
0	0	0	0	0
1	0	0	0	1
2	0	0	1	0
3	0	0	1	1
4	0	1	0	0
5	0	1	0	1
6	0	1	1	0
7	0	1	1	1
8	1	0	0	0
9	1	0	0	1
10	1	0	1	0
11	1	0	1	1
12	1	1	0	0
13	1	1	0	1
14	1	1	1	0
15	1	1	1	1

CARRY OUTPUT "CO"

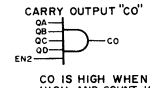

CO IS HIGH WHEN EN2 INPUT IS HIGH AND COUNT IS "15".

SN74153N (TI)
SN74LS153N (TI)

TTL 4-LINE-TO-1-LINE DATA SELECTOR/MULTIPLEXER

— TOP VIEW —

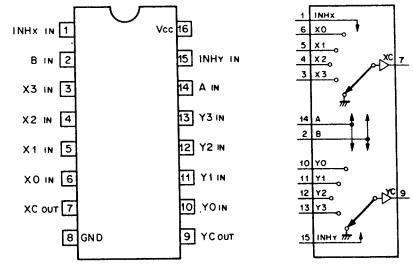

CONTROL IN			ON CHANNEL
INH	B	A	
L	L	L	0
L	L	H	1
L	H	L	2
L	H	H	3
H	X	X	GND

BVH-1100A

SN74163N (TI)
SN74LS163AN (TI)

TTL PRESETTABLE SYNCHRONOUS 4-BIT BINARY COUNTER

– TOP VIEW –

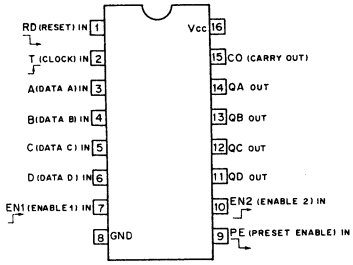

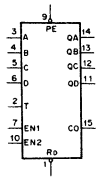

MODE SELECTION

CONTROL INPUTS				MODE
Ro	PE	EN1	EN2	
0	X	X	X	RESET (SYNCHRONOUS)
1	0	X	X	PRESET (SYNCHRONOUS)
1	1	0	X	NO COUNT
1	1	X	0	NO COUNT
1	1	1	1	COUNT

COUNT SEQUENCE

COUNT	OUTPUTS			
	QD	QC	QB	QA
0	0	0	0	0
1	0	0	0	1
2	0	0	1	0
3	0	0	1	1
4	0	1	0	0
5	0	1	0	1
6	0	1	1	0
7	0	1	1	1
8	1	0	0	0
9	1	0	0	1
10	1	0	1	0
11	1	0	1	1
12	1	1	0	0
13	1	1	0	1
14	1	1	1	0
15	1	1	1	1

CARRY OUTPUT "CO"

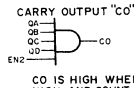

CO IS HIGH WHEN EN2 INPUT IS HIGH AND COUNT IS "15".

SN74164N (TI)
SN74LS164N (TI)

TTL 8-BIT PARALLEL-OUT SERIAL SHIFT REGISTER

—TOP VIEW—

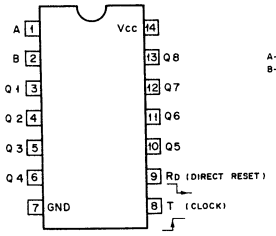

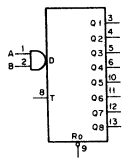

INPUTS				OUTPUTS			
Ro	T	A	B	Q1	Q2	----	Q8
L	X	X	X	L	L	L	L
H	L	X	X	Q1o	Q2o	----	Q8o
H	↑	H	H	H	Q1n	----	Q7n
H	↑	L	X	L	Q1n	----	Q7n
H	↑	X	L	L	Q1n	----	Q7n

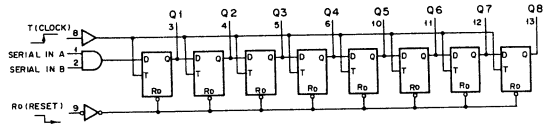

SN74174N (TI)
SN74LS174N (TI)

TTL D-TYPE FLIP-FLOP WITH DIRECT RESET

—TOP VIEW—

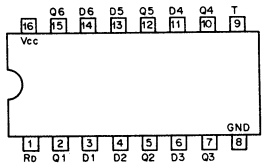

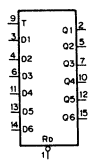

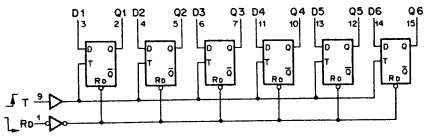

EACH FLIP-FLOP

INPUTS			OUT
Rd	T	D	Q
L	X	X	L
H	↑	L	L
H	↑	H	H
H	L	X	Qo

SN74175N (TI)
SN74S175N (TI)
SN74LS175N (TI)

TTL D-TYPE FLIP-FLOP WITH CLEAR

–TOP VIEW–

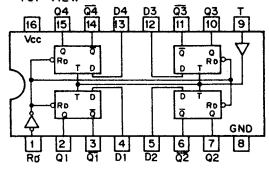

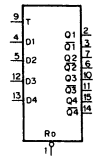

Ro	T	D	Q	$\bar{Q}$
L	X	X	L	H
H	↑	H	H	L
H	↑	L	L	H
H	L	X	Qo	$\bar{Q}o$

X = DON'T CARE

Qo = THE LEVEL OF Q BEFORE THE INDICATED STEADY-STATE INPUT CONDITIONS WERE ESTABLISHED.

SN74190N (TI)
SN74LS190N (TI)

TTL PRESETTABLE SYNCHRONOUS BCD UP/DOWN COUNTER

–TOP VIEW–

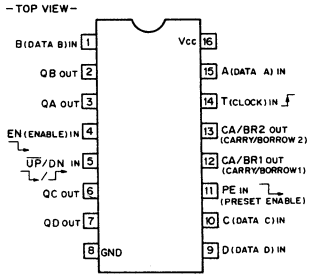

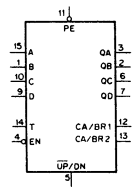

MODE SELECTION

CONTROL INPUTS			MODE
PE	EN	UP/DN	
0	X	X	PRESET (ASYNCRONOUS)
1	1	X	NO COUNT
1	0	0	UP COUNT
1	0	1	DOWN COUNT

COUNT SEQUENCE

COUNT	OUTPUTS				
	QD	QC	QB	QA	
0	0	0	0	0	UP COUNT ↑
1	0	0	0	1	
2	0	0	1	0	
3	0	0	1	1	
4	0	1	0	0	
5	0	1	0	1	
6	0	1	1	0	
7	0	1	1	1	
8	1	0	0	0	
9	1	0	0	1	↓ DOWN COUNT

CA/BRW OUTPUTS

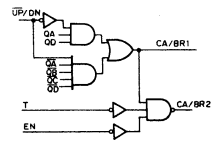

CA/BR1 OUTPUT IS HIGH WHEN COUNT IS "9" AT UP-COUNT OR WHEN COUNT IS "0" AT DOWN COUNT.

CA/BR2 OUTPUT IS LOW WHEN CLOCK INPUT IS LOW AND EN INPUT IS LOW AND CA/BR1 OUTPUT IS HIGH.

BVH-1100A

SN74191N (TI)
SN74LS191N (TI)

TTL PRESETTABLE SYNCHRONOUS 4-BIT BINARY UP/DOWN COUNTER
— TOP VIEW —

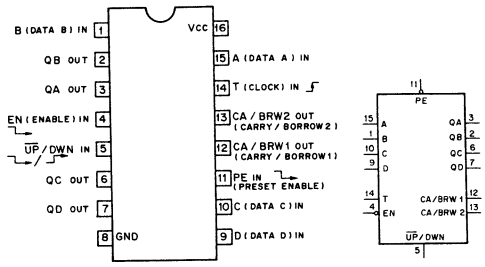

MODE SELECTION

CONTROL INPUTS			MODE
PE	EN	UP/DWN	
0	X	X	PRESET (ASYNCHRONOUS)
1	1	X	NO COUNT
1	0	0	UP COUNT
1	0	1	DOWN COUNT

COUNT SEQUENCE

COUNT	OUTPUTS			
	QD	QC	QB	QA
0	0	0	0	0
1	0	0	0	1
2	0	0	1	0
3	0	0	1	1
4	0	1	0	0
5	0	1	0	1
6	0	1	1	0
7	0	1	1	1
8	1	0	0	0
9	1	0	0	1
10	1	0	1	0
11	1	0	1	1
12	1	1	0	0
13	1	1	0	1
14	1	1	1	0
15	1	1	1	1

UP COUNT — DOWN COUNT

CA/BRW OUTPUTS

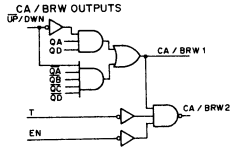

CA/BRW1 OUTPUT IS HIGH WHEN COUNT IS "15" AT UP-COUNT OR WHEN COUNT IS "0" AT DOWN COUNT.

CA/BRW2 OUTPUT IS LOW WHEN CLOCK INPUT IS LOW AND EN INPUT IS LOW AND CA/BRW1 OUTPUT IS HIGH.

SN74193N (TI)
SN74LS193N (TI)

TTL PRESETTABLE SYNCHRONOUS 4-BIT UP/DOWN COUNTER
— TOP VIEW —

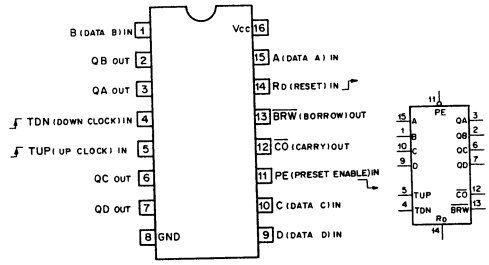

CONTROL INPUTS				MODE
RD	PE	TUP	TDN	
1	X	X	X	RESET TO ZERO
0	0	X	X	PRESET
0	1	↑	1	UP COUNT
0	1	1	↑	DOWN COUNT
0	1	1	1	NO COUNT

COUNT	OUTPUTS			
	QD	QC	QB	QA
0	0	0	0	0
1	0	0	0	1
2	0	0	1	0
3	0	0	1	1
4	0	1	0	0
5	0	1	0	1
6	0	1	1	0
7	0	1	1	1
8	1	0	0	0
9	1	0	0	1
10	1	0	1	0
11	1	0	1	1
12	1	1	0	0
13	1	1	0	1
14	1	1	1	0
15	1	1	1	1

UP COUNT — DOWN COUNT

$\overline{CO} = \overline{TUP} \cdot QA \cdot \overline{QB} \cdot QC \cdot QD$

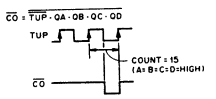

$\overline{BRW} = \overline{TDN} \cdot \overline{QA} \cdot \overline{QB} \cdot \overline{QC} \cdot \overline{QD}$

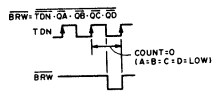

SN74221N (TI)
SN74LS221N (TI)

TTL MONOSTABLE MULTIVIBRATOR WITH SCHMITT TRIGGER INPUT
— TOP VIEW —

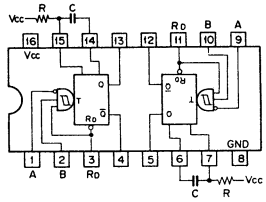

INPUTS			OUTPUTS	
RD	A	B	Q	$\overline{Q}$
L	X	X	L	H
X	H	X	L	H
X	X	L	L	H
H	L	↑	↑	↓
H	↓	H	↑	↓
↑	L	H	↑	↓

OUTPUT PULSE WIDTH = 0.7CR

SN74LS253N (TI)

TTL 4-LINE-TO-1-LINE DATA SELECTOR/MULTIPLEXER
— TOP VIEW —

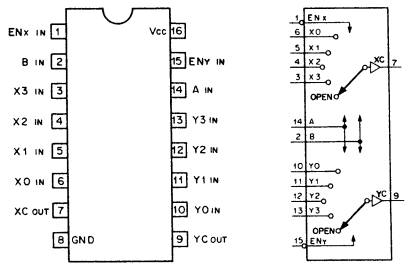

CONTROL IN			ON CHANNEL
EN	B	A	
L	L	L	0
L	L	H	1
L	H	L	2
L	H	H	3
H	X	X	OPEN

SN74259N (TI)
SN74LS259N (TI)

TTL 8-BIT ADDRESSABLE LATCHES
— TOP VIEW —

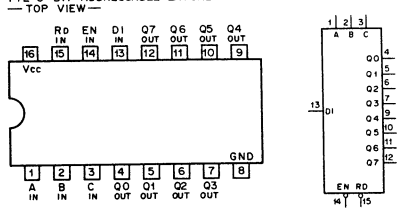

MODE SELECTION

CONTROL INPUTS		OUTPUT OF ADDRESSED LATCH	OUTPUT OF EACH OTHER LATCH
RD	EN		
1	0	DI	Qno
1	1	Qno	Qno
0	0	DI	0
0	1	0	0

LATCH SELECTION

CONTROL INPUTS			ADDRESSED LATCH
C	B	A	
0	0	0	0
0	0	1	1
0	1	0	2
0	1	1	3
1	0	0	4
1	0	1	5
1	1	0	6
1	1	1	7

SN74265N (TI)

TTL COMPLEMENTARY-OUTPUT ELEMENT
— TOP VIEW —

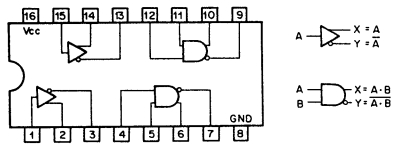

BVH-1100A

SN74273N (TI)
SN74LS273N (TI)

TTL D-TYPE FLIP-FLOP WITH DIRECT RESET
— TOP VIEW —

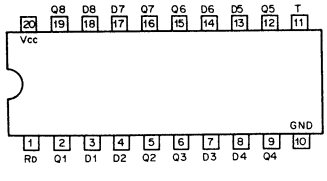

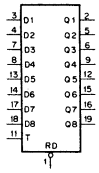

EACH FLIP-FLOP

INPUTS			OUT
RD	T	D	Q
L	X	X	L
H	↓	L	L
H	↓	H	H
H	L	X	Q0

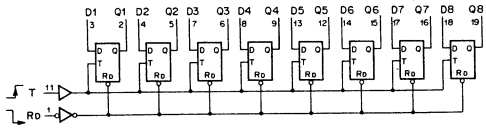

SN74279N (TI)
SN74LS279N (TI)

TTL R-S LATCH
—TOP VIEW—

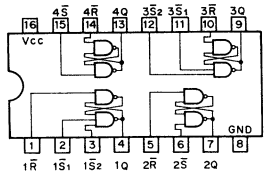

S̄	R̄	Q
L	L	H
L	H	H
H	L	L
H	H	Q0

S̄; H=BOTH S̄ INPUTS HIGH
L=ONE OR BOTH S̄ INPUTS LOW

SN74283N (TI)
SN74LS283N (TI)

TTL 4-BIT BINARY FULL ADDER
—TOP VIEW—

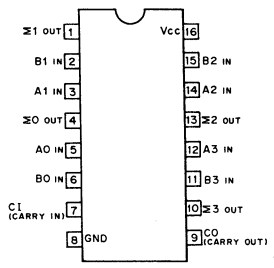

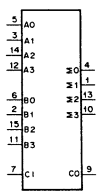

	2^4	2^3	2^2	2^1	2^0	
					CI	CARRY IN
		A3	A2	A1	A0	DATA A IN
+		B3	B2	B1	B0	DATA B IN
	CO	Σ3	Σ2	Σ1	Σ0	CARRY & SUM OUT
EX.					1	CI
		1	0	1	1	A
+		1	0	1	0	B
	1	0	1	1	0	OUTPUTS
	CO	Σ3	Σ2	Σ1	Σ0	

SN74290N (TI)
SN74LS290N (TI)

TTL DIVIDE-BY-2 AND DIVIDE-BY-5 COUNTER
—TOP VIEW—

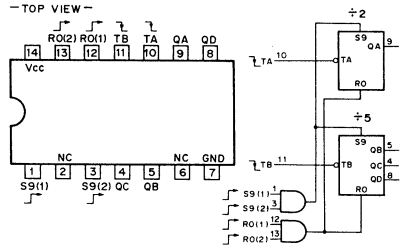

COUNT SEQUENCE

÷2 SECTION

COUNT	QA
0	0
1	1

÷5 SECTION

COUNT	QD	QC	QB
0	0	0	0
1	0	0	1
2	0	1	0
3	0	1	1
4	1	0	0

SET/RESET/COUNT FUNCTION

SET/RESET IN				OUTPUTS			
R0(1)	R0(2)	S9(1)	S9(2)	QD	QC	QB	QA
1	1	0	X	0	0	0	0
1	1	X	0	0	0	0	0
X	X	1	1	1	0	0	1
X	0	X	0	COUNT			
0	X	0	X	COUNT			
0	X	X	0	COUNT			
X	0	0	X	COUNT			

SN74293N (TI)
SN74LS293N (TI)

TTL 4-BIT AND 3-BIT BINARY COUNTER
—TOP VIEW—

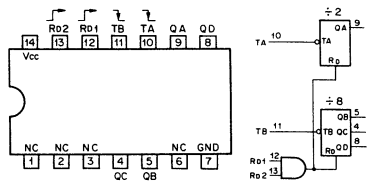

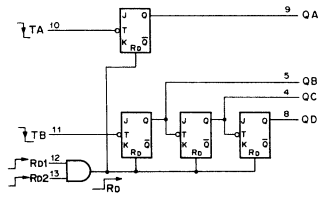

COUNT SEQUENCE

÷2 SECTION

COUNT	QA
0	0
1	1

÷8 SECTION

COUNT	QD	QC	QB
0	0	0	0
1	0	0	1
2	0	1	0
3	0	1	1
4	1	0	0
5	1	0	1
6	1	1	0
7	1	1	1

RESET/COUNT FUNCTION

RESET IN		OUTPUTS			
R01	R02	QD	QC	QB	QA
1	1	0	0	0	0
X	0	COUNT			
0	X	COUNT			

SN74LS375N (TI)

TTL BISTABLE LATCH
—TOP VIEW—

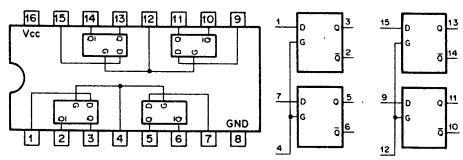

D	G	Q	Q̄
0	1	0	1
1	1	1	0
X	0	Q0	Q̄0

BVH-1100A

SN74LS385N (TI)
TTL SERIAL ADDER/SUBTRACTOR
– TOP VIEW –

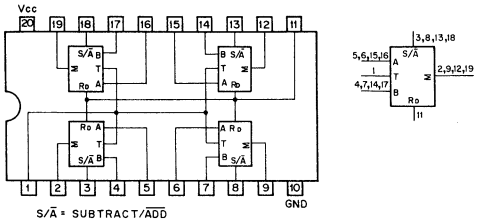

S/$\overline{A}$ = SUBTRACT/$\overline{ADD}$
Σ = SUM

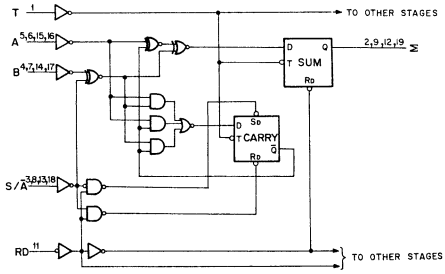

SELECTED FUNCTION	INPUT					INTERNAL CARRY D INPUT	Σ OUTPUT
	RD	S/$\overline{A}$	A	B	T	BEFORE CLOCK(↑)	AFTER CLOCK(↑)
CLEAR	0	0	X	X	X	0	0	0
	0	1	X	X	X	1	1	0
ADD	1	0	0	0	↑	0	0	0
	1	0	0	0	↑	1	0	1
	1	0	0	1	↑	0	0	1
	1	0	0	1	↑	1	1	0
	1	0	1	0	↑	0	0	1
	1	0	1	0	↑	1	1	0
	1	0	1	1	↑	0	1	0
	1	0	1	1	↑	1	1	1
SUBTRACT	1	1	0	0	↑	0	0	1
	1	1	0	0	↑	1	1	0
	1	1	0	1	↑	0	0	0
	1	1	0	1	↑	1	0	1
	1	1	1	0	↑	0	1	0
	1	1	1	0	↑	1	1	1
	1	1	1	1	↑	0	0	1
	1	1	1	1	↑	1	1	0

SN74393N (TI)
SN74LS393N (TI)
TTL 4-BIT BINARY COUNTER
— TOP VIEW —

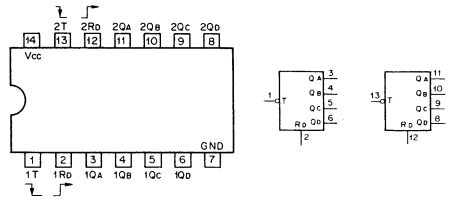

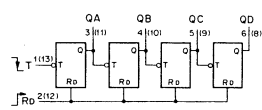

COUNT SEQUENCE

COUNT	QD	QC	QB	QA
0	0	0	0	0
1	0	0	0	1
2	0	0	1	0
3	0	0	1	1
4	0	1	0	0
5	0	1	0	1
6	0	1	1	0
7	0	1	1	1
8	1	0	0	0
9	1	0	0	1
10	1	0	1	0
11	1	0	1	1
12	1	1	0	0
13	1	1	0	1
14	1	1	1	0
15	1	1	1	1

RESET/COUNT FUNCTION

RD	QD	QC	QB	QA
1	0	0	0	0
0	COUNT			

SN74LS669N (TI)
TTL PRESETTABLE SYNCHRONOUS 4-BIT BINARY UP/DOWN COUNTER
— TOP VIEW —

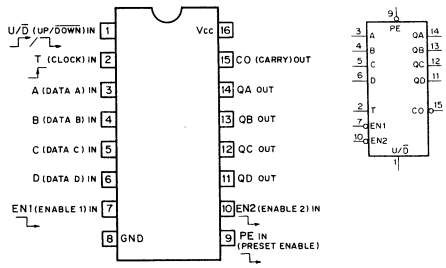

MODE SELECTION

INPUTS				MODE
PE	EN1	EN2	U/$\overline{D}$	
0	X	X	X	PRESET
X	1	X	X	NO COUNT
X	X	1	X	NO COUNT
1	0	0	1	UP COUNT
1	0	0	0	DOWN COUNT

COUNT SEQUENCE

COUNT	OUTPUTS			
	QD	QC	QB	QA
0	0	0	0	0
1	0	0	0	1
2	0	0	1	0
3	0	0	1	1
4	0	1	0	0
5	0	1	0	1
6	0	1	1	0
7	0	1	1	1
8	1	0	0	0
9	1	0	0	1
10	1	0	1	0
11	1	0	1	1
12	1	1	0	0
13	1	1	0	1
14	1	1	1	0
15	1	1	1	1

UP COUNT
DOWN COUNT

CARRY OUTPUTS "CO"
AT U/$\overline{D}$ = 1
AT U/$\overline{D}$ = 0

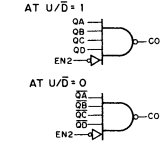

SN74390N (TI)
SN74LS390N (TI)
TTL DIVIDE-BY-2 AND DIVIDE-BY-5 COUNTER
— TOP VIEW —

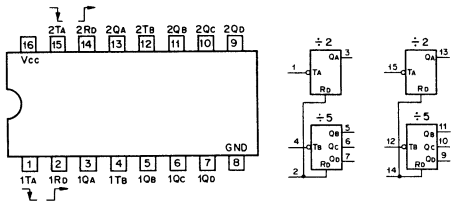

COUNT SEQUENCE
÷2 SECTION

COUNT	QA
0	0
1	1

÷5 SECTION

COUNT	QD	QC	QB
0	0	0	0
1	0	0	1
2	0	1	0
3	0	1	1
4	1	0	0

RESET/COUNT FUNCTION

RD	QD	QC	QB	QA
1	0	0	0	0
0	COUNT			

SN75207N (TI)
BIPOLAR LINE RECEIVER (TTL COMPATIBLE)
— TOP VIEW —

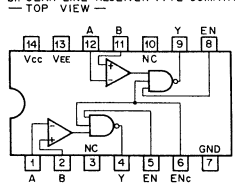

INPUTS			OUT
B – A	EN	ENc	Y
B – A ≧ 10mV	X	L	H
	L	X	H
	H	H	L
|B – A| < 10mV	X	L	H
	L	X	H
	H	H	?
B – A ≦ –10mV	X	X	H

BVH-1100A

TA7504M (TOSHIBA)
TA7504M-R (LOW NOISE SELECTED)
μA741HC (FSC)
HA17741M (HITACHI)
OPERATIONAL AMPLIFIER
—BOTTOM VIEW—

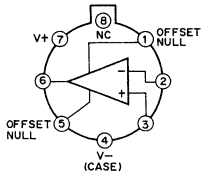

TA7506M (TOSHIBA)
LM301AH (NSC)
OPERATIONAL AMPLIFIER
—BOTTOM VIEW—

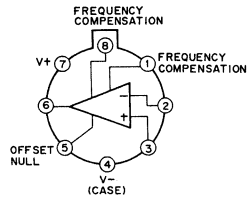

TC4001BP (TOSHIBA)
CD4001AE/BE (RCA)
MC14001BCP (MOTOROLA)
MB84001B (FUJITSU)
HD14001BP (HITACHI)
C-MOS 2-INPUT NOR GATE
— TOP VIEW —

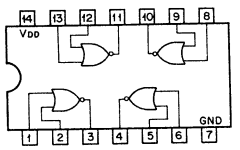

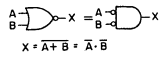

A	B	X
0	0	1
0	1	0
1	0	0
1	1	0

TC4002BP (TOSHIBA)
CD4002AE/BE (RCA)
MC14002BCP (MOTOROLA)
C-MOS 4-INPUT NOR GATE
— TOP VIEW —

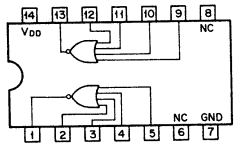

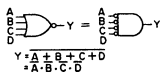

A	B	C	D	Y
0	0	0	0	1
X	X	X	1	0
X	X	1	X	0
X	1	X	X	0
1	X	X	X	0

TC4011BP (TOSHIBA)
CD4011AE/BE (RCA)
MC14011BCP (MOTOROLA)
MB84011B (FUJITSU)
HD14011BP (HITACHI)
C-MOS 2-INPUT NAND GATE
— TOP VIEW —

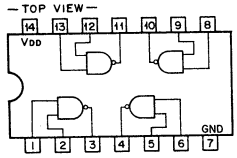

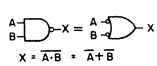

A	B	X
0	0	1
0	1	1
1	0	1
1	1	0

TC4013BP (TOSHIBA)
MB84013M (FUJITSU)
CD4013AE/BE (RCA)
MC14013BCP (MOTOROLA)
C-MOS D-TYPE FLIP FLOP WITH DIRECT SET/RESET
—TOP VIEW—

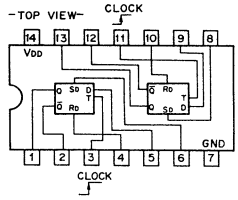

DIRECT R-S FLIP FLOP

Sd	Rd	Q
0	0	On
0	1	0
1	0	1
1	1	0

D-TYPE FLIP FLOP

tn	tn+1
D	Q
0	0
1	1

CLOCK T: ⌐¬
tn; BEFORE CLOCK
tn+1; AFTER CLOCK

TC4015BP (TOSHIBA)
CD4015AE/BE (RCA)
C-MOS DUAL 4-STAGE STATIC SHIFT REGISTER WITH DIRECT RESET
— TOP VIEW —

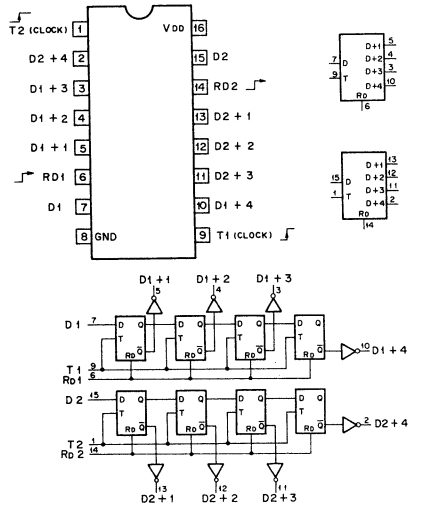

TC4023BP (TOSHIBA)
CD4023AE/BE (RCA)
C-MOS 3-INPUT NAND GATE
— TOP VIEW —

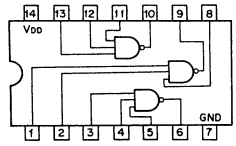

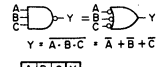

A	B	C	Y
X	X	0	1
X	0	X	1
0	X	X	1
1	1	1	0

TC4025BP (TOSHIBA)
CD4025AE/BE (RCA)
C-MOS 3-INPUT NOR GATE
— TOP VIEW —

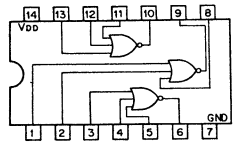

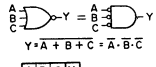

A	B	C	Y
0	0	0	1
X	X	1	0
X	1	X	0
1	X	X	0

BVH-1100A

TC4027BP (TOSHIBA)
CD4027AE/BE (RCA)
MC14027BPC (MOTOROLA)
C-MOS J-K MASTER SLAVE FLIP FLOP WITH DIRECT SET/RESET
—TOP VIEW—

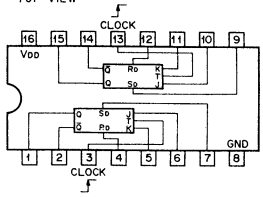

DIRECT R-S FLIP FLOP

Sn	Rn	Q
0	0	Qn
0	1	0
1	0	1
1	1	0

J-K FLIP FLOP

tn		tn+1
J	K	Q
0	0	Qn
0	1	0
1	0	1
1	1	$\overline{Qn}$

CLOCK ↑ ↓
tn; BEFORE CLOCK
tn+1; AFTER CLOCK

TC4040BP (TOSHIBA)
CD4040AE/BE (RCA)
C-MOS 12-STAGE RIPPLE CARRY BINARY COUNTER/DRIVER
— TOP VIEW —

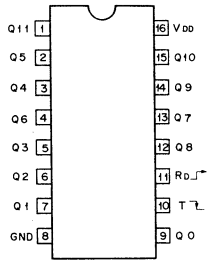

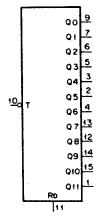

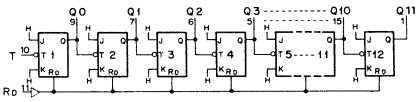

COUNT	Q11	Q10	Q9	Q8	Q7	Q6	Q5	Q4	Q3	Q2	Q1	Q0
0	0	0	0	0	0	0	0	0	0	0	0	0
1	0	0	0	0	0	0	0	0	0	0	0	1
2	0	0	0	0	0	0	0	0	0	0	1	0
3	0	0	0	0	0	0	0	0	0	0	1	1
⋮	⋮	⋮	⋮	⋮	⋮	⋮	⋮	⋮	⋮	⋮	⋮	⋮
4095	1	1	1	1	1	1	1	1	1	1	1	1

RD	Q11 ····· Q0
1	ALL LOW
0	COUNT

TC4044BP (TOSHIBA)
CD4044AE/BE (RCA)
C-MOS 3-STATE OUTPUT NAND R/S LATCH
—TOP VIEW—

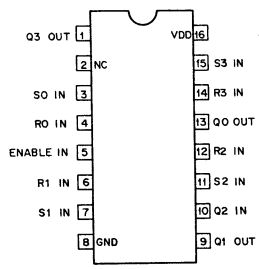

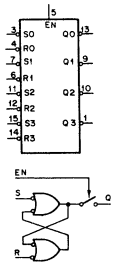

S	R	E	Q
X	X	0	HIGH INPEDANCE
0	0	1	0
0	1	1	1
1	0	1	0
1	1	1	NO CHANGE

X: DON'T CARE

TC4049BP (TOSHIBA)
CD4049AE (RCA)
MB84049B (FUJITSU)
C-MOS INVERTING TYPE BUFFER/CONVERTER
—TOP VIEW—

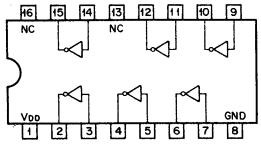

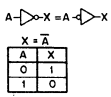

A	X
0	1
1	0

TC4050BP (TOSHIBA)
CD4050AE/BE (RCA)
μPD4050C (NEC)
C-MOS NON-INVERTING TYPE BUFFER/CONVERTER
—TOP VIEW—

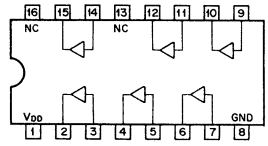

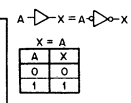

A	X
0	0
1	1

TC4051BP (TOSHIBA)
CD4051BE (RCA)
MC14051BCP (MOTOROLA)
μPD4051BC (NEC)
HD14051BP (HITACHI)
C-MOS 8-CHANNEL MULTIPLEXER/DEMULTIPLEXER
— TOP VIEW—

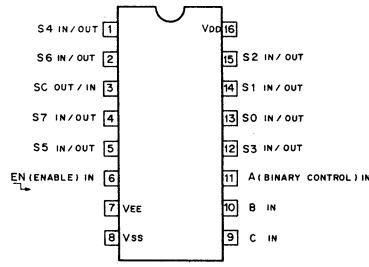

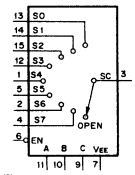

EN	C	B	A	"ON" CHANNEL
0	0	0	0	0
0	0	0	1	1
0	0	1	0	2
0	0	1	1	3
0	1	0	0	4
0	1	0	1	5
0	1	1	0	6
0	1	1	1	7
1	X	X	X	OPEN

X; DON'T CARE
1; HIGH LEVEL
0; LOW LEVEL

TC4052BP (TOSHIBA)
CD4052BE (RCA)
HD14052BP (HITACHI)
C-MOS 4-CHANNEL MULTIPLEXER/DEMULTIPLEXER
— TOP VIEW —

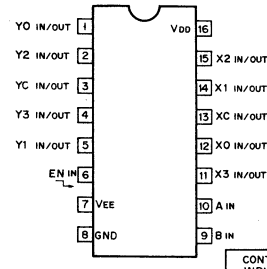

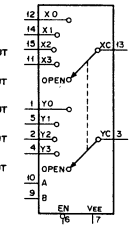

CONTROL INPUTS			"ON" CHANNEL
EN	B	A	
0	0	0	0
0	0	1	1
0	1	0	2
0	1	1	3
1	X	X	OPEN

TC4066BP (TOSHIBA)
CD4066AE/BE (RCA)
HD14066BP (HITACHI)
C-MOS BILATERAL SWITCH
— TOP VIEW —

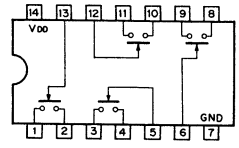

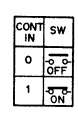

BVH-1100A

TC4068BP (TOSHIBA)
CD4068BE (RCA)
MSM4068 (OKI)

C-MOS 8-INPUT NAND GATE
— TOP VIEW —

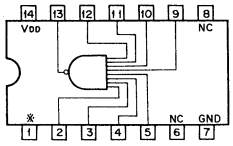

※ --- INTERNAL CONNECTION
DO NOT USE

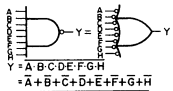

$Y = \overline{A \cdot B \cdot C \cdot D \cdot E \cdot F \cdot G \cdot H}$
$= \overline{A}+\overline{B}+\overline{C}+\overline{D}+\overline{E}+\overline{F}+\overline{G}+\overline{H}$

A	B	C	D	E	F	G	H	Y
X	X	X	X	X	X	X	0	1
X	X	X	X	X	X	0	X	1
X	X	X	X	X	0	X	X	1
X	X	X	X	0	X	X	X	1
X	X	X	0	X	X	X	X	1
X	X	0	X	X	X	X	X	1
X	0	X	X	X	X	X	X	1
0	X	X	X	X	X	X	X	1
1	1	1	1	1	1	1	1	0

TC4069UBP (TOSHIBA)
CD4069UBE (RCA)
MB84069B (FUJITSU)
HD14069BP (HITACHI)

C-MOS INVERTER
— TOP VIEW —

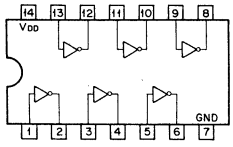

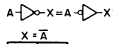

$X = \overline{A}$

A	X
0	1
1	0

TC4071BP (TOSHIBA)
CD4071BE (RCA)
μPD4071C (NEC)

C-MOS 2-INPUT OR GATE
— TOP VIEW —

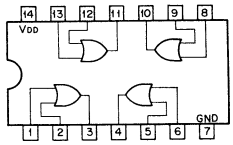

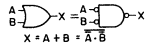

$X = A + B = \overline{\overline{A} \cdot \overline{B}}$

A	B	X
0	0	0
0	1	1
1	0	1
1	1	1

TC4073BP (TOSHIBA)
CD4073BE (RCA)
μPD4073BC (NEC)

C-MOS 3-INPUT POSITIVE AND GATE
— TOP VIEW —

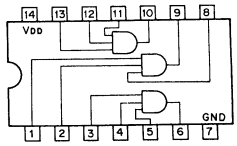

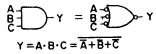

$Y = A \cdot B \cdot C = \overline{\overline{A}+\overline{B}+\overline{C}}$

A	B	C	Y
X	X	0	0
X	0	X	0
0	X	X	0
1	1	1	1

TC4075BP (TOSHIBA)
CD4075BE (RCA)

C-MOS 3-INPUT OR GATE
— TOP VIEW —

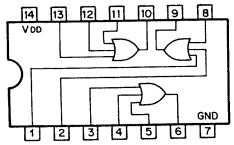

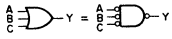

$Y = A + B + C = \overline{\overline{A} \cdot \overline{B} \cdot \overline{C}}$

C	B	A	Y
0	0	0	0
X	X	1	1
X	1	X	1
1	X	X	1

TC4081BP (TOSHIBA)
CD4081BE (RCA)
μPD4081C (NEC)

C-MOS 2-INPUT AND GATE
— TOP VIEW —

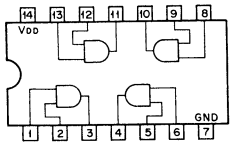

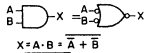

$X = A \cdot B = \overline{\overline{A}+\overline{B}}$

A	B	X
0	0	0
0	1	0
1	0	0
1	1	1

TC4516BP (TOSHIBA)
MC14516BCP (MOTOROLA)
μPD4516BC (NEC)

C-MOS PRESETTABLE BINARY UP/DOWN COUNTER
— TOP VIEW —

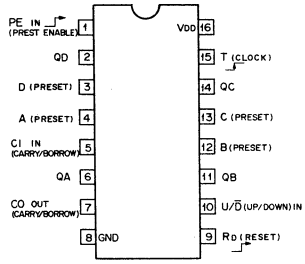

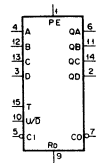

INPUTS					OUTPUTS			
T	RD	PE	CI	U/D	QD	QC	QB	QA
X	1	X	X	X	0	0	0	0
X	0	1	X	X	SET TO A,B,C,D			
↓	0	0	0	1	COUNT UP			
↓	0	0	0	0	COUNT DOWN			
0	0	0	X	X	NO CHANGE			
X	0	0	1	X	NO CHANGE			

CO = L
CI = L & (DOWN · COUNT "0" OR UP · COUNT "15")

COUNT	OUTPUTS			
	QD	QC	QB	QA
0	0	0	0	0
1	0	0	0	1
2	0	0	1	0
3	0	0	1	1
4	0	1	0	0
5	0	1	0	1
6	0	1	1	0
7	0	1	1	1
8	1	0	0	0
9	1	0	0	1
10	1	0	1	0
11	1	0	1	1
12	1	1	0	0
13	1	1	0	1
14	1	1	1	0
15	1	1	1	1

COUNT UP / COUNT DOWN

TC4520BP (TOSHIBA)
MC14520BCP (MOTOROLA)

C-MOS DUAL 4-BIT BINARY UP COUNTER
— TOP VIEW —

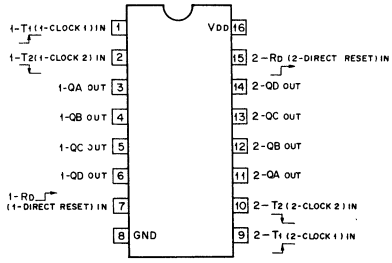

STATE	OUTPUTS			
	QD	QC	QB	QA
0	0	0	0	0
1	0	0	0	1
2	0	0	1	0
3	0	0	1	1
4	0	1	0	0
5	0	1	0	1
6	0	1	1	0
7	0	1	1	1
8	1	0	0	0
9	1	0	0	1
10	1	0	1	0
11	1	0	1	1
12	1	1	0	0
13	1	1	0	1
14	1	1	1	0
15	1	1	1	1

0; LOW
1; HIGH

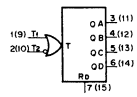

T1	T2	RD	ACTION
↓	1	0	INCREMENT COUNTER
0	↓	0	INCREMENT COUNTER
↓	X	0	NO CHANGE
X	↓	0	NO CHANGE
↓	0	0	NO CHANGE
1	↓	0	NO CHANGE
X	X	1	QA THRU QD = 0

BVH-1100A

TC4539BP (TOSHIBA)
MC14539BCP (MOTOROLA)

C-MOS DUAL 4-CHANNEL DATA SELECTOR/MULTIPLEXER
-TOP VIEW-

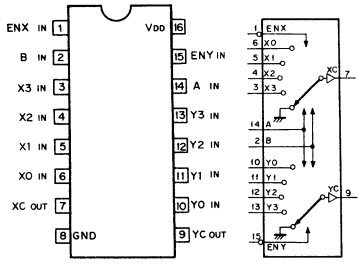

CONT IN			ON CHANNEL
EN	B	A	
0	0	0	0
0	0	1	1
0	1	0	2
0	1	1	3
1	X	X	GND

TC5020BP (TOSHIBA)

C-MOS LOW-TO-HIGH VOLTAGE TRANSLATION INVERTER
- TOP VIEW -

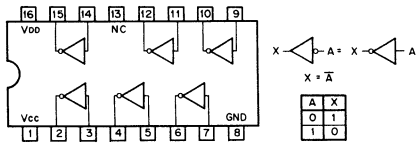

A	X
0	1
1	0

TC40162BP (TOSHIBA)
MC14162BCP (MOTOROLA)

C-MOS PRESETTABLE SYNCHRONOUS 4-BIT DECADE COUNTER
- TOP VIEW -

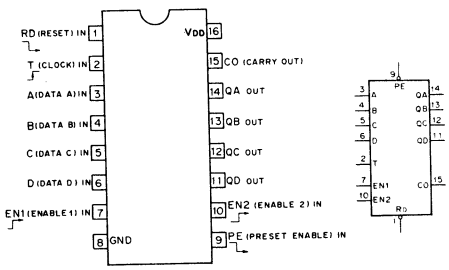

MODE SELECTION

CONTROL INPUTS				MODE
RD	PE	EN1	EN2	
0	X	X	X	RESET (SYNCHRONOUS)
1	0	X	X	PRESET (SYNCHRONOUS)
1	1	0	X	NO COUNT
1	1	X	0	NO COUNT
1	1	1	1	COUNT

COUNT SEQUENCE

COUNT	OUTPUTS				
	QD	QC	QB	QA	CO
0	0	0	0	0	0
1	0	0	0	1	0
2	0	0	1	0	0
3	0	0	1	1	0
4	0	1	0	0	0
5	0	1	0	1	0
6	0	1	1	0	0
7	0	1	1	1	0
8	1	0	0	0	0
9	1	0	0	1	1

CARRY OUTPUT "CO"

CO IS HIGH WHEN EN2 INPUT IS HIGH AND COUNT IS "9".

TC40163BP (TOSHIBA)
MC14163BCP (MOTOROLA)

C-MOS PRESETTABLE SYNCHRONOUS 4-BIT BINARY COUNTER
- TOP VIEW -

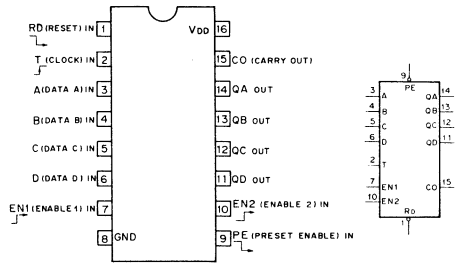

MODE SELECTION

CONTROL INPUTS				MODE
RD	PE	EN1	EN2	
0	X	X	X	RESET (SYNCHRONOUS)
1	0	X	X	PRESET (SYNCHRONOUS)
1	1	0	X	NO COUNT
1	1	X	0	NO COUNT
1	1	1	1	COUNT

COUNT SEQUENCE

COUNT	OUTPUTS			
	QD	QC	QB	QA
0	0	0	0	0
1	0	0	0	1
2	0	0	1	0
3	0	0	1	1
4	0	1	0	0
5	0	1	0	1
6	0	1	1	0
7	0	1	1	1
8	1	0	0	0
9	1	0	0	1
10	1	0	1	0
11	1	0	1	1
12	1	1	0	0
13	1	1	0	1
14	1	1	1	0
15	1	1	1	1

CARRY OUTPUT "CO"

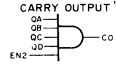

CO IS HIGH WHEN EN2 INPUT IS HIGH AND COUNT IS "15".

TC40174BP (TOSHIBA)
MC14174BCP (MOTOROLA)

C-MOS D-TYPE FLIP-FLOP
—TOP VIEW—

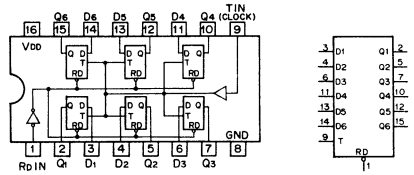

INPUTS			OUTPUT
T	D	RD	Q
↑	0	1	0
↑	1	1	1
↓	X	1	Q
X	X	0	0

TL072CP (TI)

OPERATIONAL AMPLIFIER
(LOW-NOISE, JFET-INPUT)
—TOP VIEW—

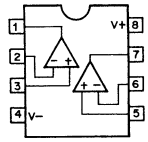

BVH-1100A

TL074CN (TI)
TL074ACN (TI)
OPERATIONAL AMPLIFIER
(LOW-NOISE, JFET-INPUT)
– TOP VIEW–

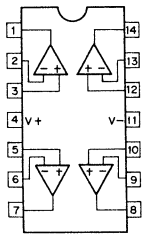

TL082CP (TI)
OPERATIONAL AMPLIFIER
(JFET-INPUT)
– TOP VIEW –

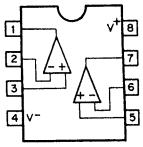

TL191CN (TI)
TWIN DUAL COMPLEMENTARY
BI-MOS ANALOG SWITCHER
– TOP VIEW –

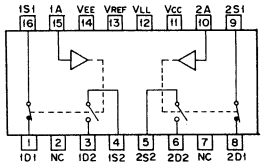

A	S1	S2
1	ON	OFF
0	OFF	ON

TL607CP (TI) SN72607P (TI)
MOS ANALOG SWITCH
– TOP VIEW –

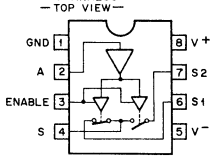

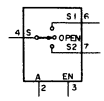

INPUTS		SW
A	EN	
X	L	OPEN
L	H	
H	H	

TL820CN (TI)
VOLTAGE COMPARATOR
(DIFFERENTIAL INPUTS)
– TOP VIEW –

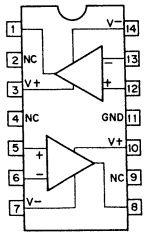

VFQ-1C (DATEL)
VOLTAGE-TO-FREQUENCY CONVERTER
–TOP VIEW–

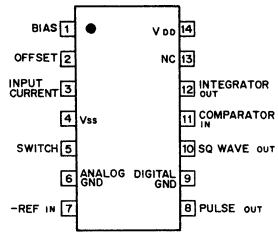

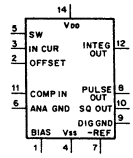

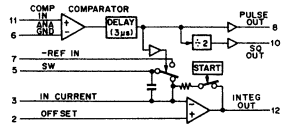

µA723DC (FSC)
HA17723G (HITACHI)
VOLTAGE REGULATOR
– TOP VIEW –

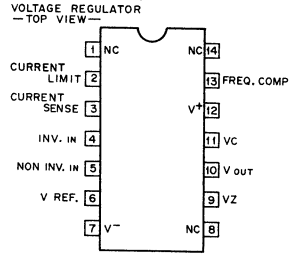

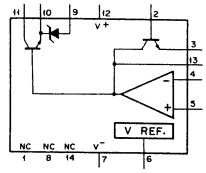

µA739DC (FSC)
µA739PC (FSC)
AUDIO OPERATIONAL AMPLIFIER (LOW NOISE)
AUDIO PREAMPLIFIER (LOW NOISE)
–TOP VIEW–

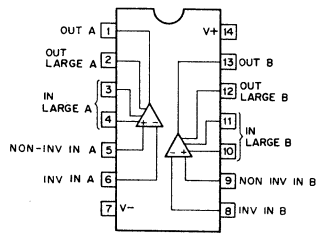

BVH-1100A

μPC71A (NEC)
μA710HC (FSC)
TL710CL (TI)
HIGH SPEED VOLTAGE COMPARATOR
— TOP VIEW —

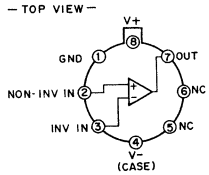

μA796HC (FSC)
DOUBLE-BALANCED MOD/DEMOD.
— BOTTOM VIEW —

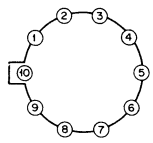

1 +SIGNAL INPUT
2 GAIN ADJUST
3 GAIN ADJUST
4 -SIGNAL INPUT
5 BIAS
6 +OUTPUT
7 +CARRIER INPUT
8 -CARRIER INPUT
9 -OUTPUT
10 V⁻

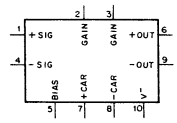

μPC159A (NEC)
LM318H (NSC)
OPERATIONAL AMPLIFIER
(HIGH SPEED, WIDE BANDWIDTH)
— BOTTOM VIEW —

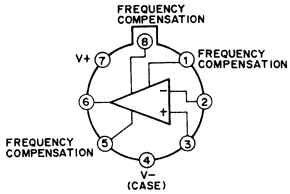

μPC339C (NEC)
LM339 (NSC)
COMPARATOR
— TOP VIEW —

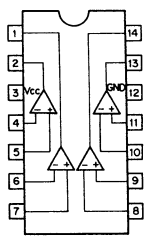

μPC4557C (NEC)
OPERATIONAL AMPLIFIER
(WIDE BAND, LOW NOISE)
— TOP VIEW —

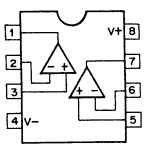

μPC4558C (NEC)
RC4558 (RAYTHEON)
OPERATIONAL AMPLIFIER
— TOP VIEW —

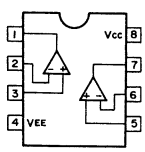

BVH-1100A

MB7051 (FUJITSU)
IM5610CJE (INTERSIL)

256-BIT (32x 8) PROM (3-STATE OUTPUT)

– TOP VIEW –

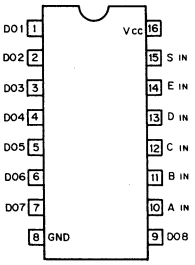

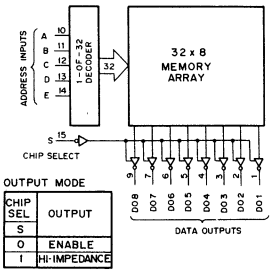

OUTPUT MODE

CHIP SEL	OUTPUT
S	
0	ENABLE
1	HI-IMPEDANCE

WORD / ADDRESS TABLE

WORD	ADDRESS INPUTS E	D	C	B	A
0	0	0	0	0	0
1	0	0	0	0	1
2	0	0	0	1	0
⋮	⋮	⋮	⋮	⋮	⋮
29	1	1	1	0	1
30	1	1	1	1	0
31	1	1	1	1	1

DATA CODE / ACTUAL DATA

DATA CODE		ACTUAL DATA DO8	DO7	DO6	DO5	DO4	DO3	DO2	DO1
0	00	0	0	0	0	0	0	0	0
1	01	0	0	0	0	0	0	0	1
2	02	0	0	0	0	0	0	1	0
⋮	⋮	⋮	⋮	⋮	⋮	⋮	⋮	⋮	⋮
8	08	0	0	0	0	1	0	0	0
9	09	0	0	0	0	1	0	0	1
10	0A	0	0	0	0	1	0	1	0
11	0B	0	0	0	0	1	0	1	1
12	0C	0	0	0	0	1	1	0	0
13	0D	0	0	0	0	1	1	0	1
14	0E	0	0	0	0	1	1	1	0
15	0F	0	0	0	0	1	1	1	1
16	10	0	0	0	1	0	0	0	0
17	11	0	0	0	1	0	0	0	1
⋮	⋮	⋮	⋮	⋮	⋮	⋮	⋮	⋮	⋮
238	EE	1	1	1	0	1	1	1	0
239	EF	1	1	1	0	1	1	1	1
240	F0	1	1	1	1	0	0	0	0
241	F1	1	1	1	1	0	0	0	1
242	F2	1	1	1	1	0	0	1	0
⋮	⋮	⋮	⋮	⋮	⋮	⋮	⋮	⋮	⋮
248	F8	1	1	1	1	1	0	0	0
249	F9	1	1	1	1	1	0	0	1
250	FA	1	1	1	1	1	0	1	0
251	FB	1	1	1	1	1	0	1	1
252	FC	1	1	1	1	1	1	0	0
253	FD	1	1	1	1	1	1	0	1
254	FE	1	1	1	1	1	1	1	0
255	FF	1	1	1	1	1	1	1	1

IN HEXA-DECIMAL
IN DECIMAL

MB 7051-21C1
PROGRAMMED DATA

WORD (ADDRESS)	DATA OUTPUTS (IN HEXA DECIMAL)
0 – 15	00. 01. 02. 03. 04. 05. 06. 06. 06. 06. 03. 03. 03. 03. 02. 01.
16 – 31	05. 05. 05. 05. 05. 05. 05. 05. 05. 05. 05. 05. 05. 05. 05. 05.

MB7051-26CA
PROGRAMMED DATA

WORD (ADDRESS)	DATA OUTPUTS (IN HEXA DECIMAL)
0 – 15	**10. 0F. 0E. 0D.** 00. 00. **0F. 0E.** 0D. 00. 00. 00. **10. 10. 10. 10.**
16 – 31	00. 00. 00. 00. 00. 00. 00. 00. 00. 00. 00. 00. 00. 00. 00. 00.

MB7051-32CA
PROGRAMMED DATA

WORD (ADDRESS)	DATA OUTPUTS (IN HEXA DECIMAL)
0 – 15	30. 31. 32. 33. 34. 34. 35. 35. 35. 35. 36. 37. 38. 39. 3A. 3B.
16 – 31	BC. 7D. 3D. BE. 3F. 2F. 2F. 1F. 3A. 3B. BC. 3D. 3D. 3D. 3D. 3D.

MB7051-37CA
PROGRAMMED DATA

WORD (ADDRESS)	DATA OUTPUTS (IN HEXA DECIMAL)
0 – 15	02. 0C. 2C. 2C. 4C. 2C. 6C. 2C. 6C. 2C. 11. 50. 31. 70. 70. 15.
16 – 31	1C. 04. 08. 1A. 4F. 3E. CF. AF. F3. D3. 9A. EE. EE. EE. EE. 02.

MB 7051-V251
PROGRAMMED DATA

WORD (ADDRESS)	DATA OUTPUTS (IN HEXA DECIMAL)
0 – 15	FE. F7. EB. F7. FD. FA. F8. F7. 7F. 87. E5. F8. FA. FE. F6. E3.
16 – 31	F9. FC. FA. 7F. 5A. F6. FC. D7. F2. 7F. 7F. E5. FD. FD. FC. FB.

MB 7051-V261
PROGRAMMED DATA

WORD (ADDRESS)	DATA OUTPUTS (IN HEXA DECIMAL)
0 – 15	FC. FD. F8. E4. F5. FD. F9. F7. 7F. 48. E6. F9. F7. FD. F8. DA.
16 – 31	F7. F7. FD. 7F. 23. F7. F9. CF. F1. 7F. 48. E6. FD. FE. FC. FB.

MB 7051-V651
PROGRAMMED DATA

WORD (ADDRESS)	DATA OUTPUTS (IN HEXA DECIMAL)
0 – 15	90. 90. 90. B0. B8. B8. BA. AA. AA. AB. AB. AB. A9. A1. A1. A1.
16 – 31	A9. A9. AB. AB. AB. EB. EB. 6B. EA. AA. AA. AA. BA. 9A. 9E. 9C.

MB 7051-V661
PROGRAMMED DATA

WORD (ADDRESS)	DATA OUTPUTS (IN HEXA DECIMAL)
0 – 15	98. 90. 90. 90. B0. B8. B8. BA. AA. AB. AB. AB. A9. A1. A1. A1.
16 – 31	A9. AB. AB. AB. AB. EB. EB. 6B. EA. AA. AA. AA. BA. 9A. 9E. 9C.

MB 7051-V851
PROGRAMMED DATA

WORD (ADDRESS)	DATA OUTPUTS (IN HEXA DECIMAL)
0 – 15	80. 00. 18. 18. 18. 18. 98. 98. 98. 98. 80. 80. 80. 80. 00. 18.
16 – 31	18. 18. 98. 98. 98. 98. 98. 98. 98. 98. 98. 80. 80. 80. 80. 80.

MB 7051-V861
PROGRAMMED DATA

WORD (ADDRESS)	DATA OUTPUTS (IN HEXA DECIMAL)
0 – 15	80. 80. 00. 18. 18. 18. 18. 98. 98. 98. 80. 80. 80. 80. 00. 00. 18.
16 – 31	18. 98. 98. 98. 98. 98. 98. 98. 98. 98. 98. 80. 80. 80. 80. 80.

BVH-1100A

MB7052 (FUJITSU)
IM5623CJE (INTERSIL) (3-STATE OUTPUT)
1024-BIT (256 x 4) PROM

—TOP VIEW—

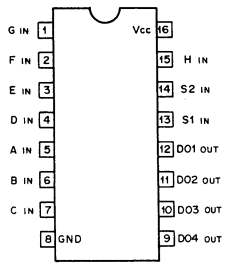

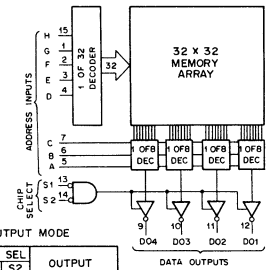

OUTPUT MODE

CHIP SEL		OUTPUT
S1	S2	
0	0	ENABLE
X	1	HI-IMPEDANCE
1	X	

WORD / ADDRESS TABLE

WORD	ADDRESS INPUTS							
	H	G	F	E	D	C	B	A
0	0	0	0	0	0	0	0	0
1	0	0	0	0	0	0	0	1
2	0	0	0	0	0	0	1	0
⋮	⋮	⋮	⋮	⋮	⋮	⋮	⋮	⋮
253	1	1	1	1	1	1	0	1
254	1	1	1	1	1	1	1	0
255	1	1	1	1	1	1	1	1

DATA CODE / ACTUAL DATA

DATA CODE		ACTUAL DATA			
		DO4	DO3	DO2	DO1
0	0	0	0	0	0
1	1	0	0	0	1
2	2	0	0	1	0
3	3	0	0	1	1
4	4	0	1	0	0
5	5	0	1	0	1
6	6	0	1	1	0
7	7	0	1	1	1
8	8	1	0	0	0
9	9	1	0	0	1
10	A	1	0	1	0
11	B	1	0	1	1
12	C	1	1	0	0
13	D	1	1	0	1
14	E	1	1	1	0
15	F	1	1	1	1

IN HEXADECIMAL
IN DECIMAL

MB7052-10C1
PROGRAMMED DATA

WORD (ADDRESS)	DATA OUTPUTS (IN HEXA-DECIMAL)
0 – 15	0. 0. 0. 0. 0. 0. 0. 0. 8. 8. 8. 8. 8. 8. 8. 8.
16 – 31	8. 8. 8. 8. 8. 8. 8. 9. 8. 8. 8. 8. 8. 8. 8. 8.
32 – 47	A. A. A. A. A. A. A. A. A. A. A. A. A. A. A. A.
48 – 63	8. A. A. 8. 8. A. 8. 8. 8. 8. 8. 8. 8. A. C. 8.
64 – 79	F. F. F. F. F. F. F. F. F. F. F. F. F. F. F. F.
80 – 95	F. F. F. F. F. F. F. F. F. F. F. F. F. F. F. F.
96 – 111	F. F. F. F. F. F. F. F. F. F. F. F. F. F. F. F.
112 – 127	F. F. F. F. F. F. F. F. F. F. F. F. F. F. F. F.
128 – 143	F. F. F. F. F. F. F. F. F. F. F. F. F. F. F. F.
144 – 159	F. F. F. F. F. F. F. F. F. F. F. F. F. F. F. F.
160 – 175	F. F. F. F. F. F. F. F. F. F. F. F. F. F. F. F.
176 – 191	F. F. F. F. F. F. F. F. F. F. F. F. F. F. F. F.
192 – 207	F. F. F. F. F. F. F. F. F. F. F. F. F. F. F. F.
208 – 223	F. F. F. F. F. F. F. F. F. F. F. F. F. F. F. F.
224 – 239	F. F. F. F. F. F. F. F. F. F. F. F. F. F. F. F.
240 – 255	F. F. F. F. F. F. F. F. F. F. F. F. F. F. F. F.

MB7052-33C1
PROGRAMMED DATA

WORD (ADDRESS)	DATA OUTPUTS (IN HEXA-DECIMAL)
0 – 15	8. 8. 8. 8. 8. 8. 8. 8. 8. 8. 8. 8. 8. 8. 8. 8.
16 – 31	8. 8. 8. 8. 8. 8. 8. 8. 8. 8. 8. 8. 8. 8. 8. 8.
32 – 47	8. 8. 8. 8. 8. 8. 8. 8. 8. 8. 8. 8. 8. 8. 8. 8.
48 – 63	8. 8. 8. 8. 8. 8. 8. 8. 8. 8. 8. 8. 8. 8. 8. 8.
64 – 79	8. 8. 8. 8. 8. 8. 8. 8. 8. 8. 8. 8. 8. 8. 8. 8.
80 – 95	8. 8. 8. 8. 8. 8. 8. 8. 8. 8. 8. 8. 8. 8. 8. 8.
96 – 111	8. 8. 8. 8. 8. 8. 8. 8. 8. 8. 8. 8. 8. 8. 8. 8.
112 – 127	8. 8. 8. 8. 8. 8. 8. 8. 8. 8. 8. 8. 8. 8. 8. 8.
128 – 143	8. 8. 8. 8. 8. 8. 8. 8. 8. 8. 8. 8. 8. 8. 8. 8.
144 – 159	8. 8. 8. 8. 8. 8. 8. 8. 8. 8. 8. 8. 8. 8. 8. 8.
160 – 175	8. 8. 8. 8. 8. 8. 8. 8. 8. 8. 8. 8. 8. 8. 8. 8.
176 – 191	8. 8. 8. 8. 8. 8. 8. 8. 8. 8. 8. 8. 8. 8. 8. 8.
192 – 207	8. 8. 8. 8. **0**. 8. 8. 8. 8. 8. 8. 8. 8. 8. 8. 8.
208 – 223	8. 8. 8. 8. **1**. 8. 8. 8. 8. 8. 8. 8. 8. 8. 8. 8.
224 – 239	8. 8. 8. 8. 8. 8. 8. 8. **6**. **4**. 8. 8. 8. 8. 8. 8.
240 – 255	8. 8. 8. **2**. **7**. 8. **5**. **3**. 8. 8. 8. 8. 8. 8. 8. 8.

MB7052-19C1
PROGRAMMED DATA

WORD (ADDRESS)	DATA OUTPUTS (IN HEXA-DECIMAL)
0 – 15	0. 0. 0. 0. 0. 0. 0. 0. 0. 0. 0. 0. 0. 0. 0. 0.
16 – 31	0. 0. 0. 0. 0. 0. 0. 0. 0. 0. 0. 0. 0. 0. 0. 0.
32 – 47	0. 0. 0. 0. **2**. 0. 0. 0. 0. 0. 0. 0. 0. 0. 0. 0.
48 – 63	0. 0. 0. **4**. 0. 0. 0. 0. 0. 0. 0. 0. 0. 0. 0. 0.
64 – 79	0. 0. 0. 0. 0. 0. 0. 0. 0. 0. **2**. 0. 0. 0. 0. 0.
80 – 95	0. 0. 0. 0. 0. **1**. 0. 0. 0. 0. 0. 0. 0. 0. 0. 0.
96 – 111	0. 0. 0. 0. 0. 0. **4**. 0. 0. 0. 0. 0. 0. **8**. 0. 0.
112 – 127	0. 0. 0. 0. 0. 0. 0. 0. 0. 0. 0. 0. 0. 0. 0. 0.
128 – 143	0. 0. 0. 0. 0. 0. 0. 0. 0. 0. 0. 0. 0. 0. 0. 0.
144 – 159	0. 0. **2**. 0. 0. 0. 0. 0. 0. **4**. 0. 0. 0. 0. 0. 0.
160 – 175	0. 0. 0. 0. 0. 0. 0. 0. 0. 0. **1**. 0. 0. 0. 0. 0.
176 – 191	0. 0. 0. 0. 0. 0. 0. **8**. 0. 0. 0. 0. 0. 0. 0. 0.
192 – 207	0. 0. 0. 0. 0. 0. 0. 0. 0. 0. 0. 0. 0. **4**. 0. 0.
208 – 223	0. 0. 0. 0. 0. 0. 0. 0. 0. 0. 0. 0. 0. 0. **8**. 0.
224 – 239	0. 0. 0. 0. 0. 0. 0. 0. 0. 0. 0. 0. 0. 0. 0. 0.
240 – 255	0. 0. 0. 0. 0. 0. 0. 0. 0. 0. 0. 0. 0. 0. 0. 0.

MB7052-R0CA
PROGRAMMED DATA

WORD (ADDRESS)	DATA OUTPUTS (IN HEXADECIMAL)
0 – 15	A. 1. A. 7. 4. 4. 1. 1. A. 1. A. 7. 7. 7. 1. 1.
16 – 31	A. 1. A. 7. 4. 4. 1. 1. A. 1. A. 7. 7. 7. 1. 1.
32 – 47	A. 1. A. 7. 4. 4. 1. 1. A. 1. A. 7. 7. 7. 1. 1.
48 – 63	A. 1. A. 7. 4. 4. 1. 1. A. 1. A. 7. 7. 7. 1. 1.
64 – 79	C. 3. C. 8. 7. 7. 2. 2. C. 3. C. 8. 9. 9. 2. 2.
80 – 95	C. 3. C. 8. 7. 7. 2. 2. C. 3. C. 8. 9. 9. 2. 2.
96 – 111	C. 3. C. 8. 7. 7. 2. 2. C. 3. C. 8. 9. 9. 2. 2.
112 – 127	C. 3. C. 8. 7. 7. 2. 2. C. 3. C. 8. 9. 9. 0. 0.
128 – 143	D. 5. D. A. A. A. 4. 4. D. 5. D. A. D. D. 6. 6.
144 – 159	D. 5. D. A. A. A. 4. 4. D. 5. D. A. D. D. 6. 6.
160 – 175	D. 5. D. A. A. A. 4. 4. D. 5. D. A. A. A. 3. 3.
176 – 191	D. 5. D. A. A. A. 4. 4. D. 5. D. A. A. A. 1. 1.
192 – 207	E. 9. E. E. F. F. B. B. E. 9. E. E. F. F. E. E.
208 – 223	E. 9. E. E. F. F. B. B. E. 9. E. E. F. F. E. E.
224 – 239	E. 9. E. E. F. F. A. A. E. 9. E. E. E. E. 9. 9.
240 – 255	E. 7. E. C. F. F. A. A. E. 7. E. C. B. B. 4. 4.

MB7052-20C2
PROGRAMMED DATA

WORD (ADDRESS)	DATA OUTPUTS (IN HEXADECIMAL)
0 – 15	0. 0. 2. 2. 8. 8. A. 8. 8. 8. A. 8. 8. 8. A. 8.
16 – 31	8. 8. A. 8. 8. 8. A. 8. 8. 8. A. A. A. B. B. B. B.
32 – 47	B. B. B. B. B. B. B. B. 7. 7. 7. 7. 7. 7. 7. 7.
48 – 63	6. 6. 6. 6. 6. 6. 6. 6. 4. 4. 4. 6. 4. 4. 4. 6. 4.
64 – 79	9. 9. 9. 9. 9. 9. 9. 9. 9. 9. 9. 9. 9. 9. 9. 9.
80 – 95	9. 9. 9. 9. 9. 9. 9. 9. 9. 9. 9. 9. 9. 9. 9. 9.
96 – 111	9. 9. 9. 9. 9. 9. 9. 9. 9. 9. 9. 9. 9. 9. 9. 9.
112 – 127	9. 9. 9. 9. 9. 9. 9. 9. 9. 9. 9. 9. 9. 9. 9. 9.
128 – 143	0. 2. 2. 0. 8. A. 8. 8. 8. A. 8. 8. 8. A. 8. 8.
144 – 159	8. A. 8. 8. 8. A. 8. 8. 8. A. A. A. A. A. A. A.
160 – 175	B. B. B. B. B. B. B. B. 7. 7. 7. 7. 7. 7. 7. 7.
176 – 191	7. 7. 7. 7. 6. 6. 4. 4. 4. 6. 4. 4. 4. 6. 4. 4.
192 – 207	9. 9. 9. 9. 9. 9. 9. 9. 9. 9. 9. 9. 9. 9. 9. 9.
208 – 223	9. 9. 9. 9. 9. 9. 9. 9. 9. 9. 9. 9. 9. 9. 9. 9.
224 – 239	9. 9. 9. 9. 9. 9. 9. 9. 9. 9. 9. 9. 9. 9. 9. 9.
240 – 255	9. 9. 9. 9. 9. 9. 9. 9. 9. 9. 9. 9. 9. 9. 9. 9.

MB7052-R52A
PROGRAMMED DATA

WORD (ADDRESS)	DATA OUTPUTS (IN HEXADECIMAL)
0 – 15	2. 1. 1. 1. 2. B. C. C. 2. B. C. E. 2. B. C. F.
16 – 31	2. 1. 1. 1. 2. B. C. C. 2. B. C. C. 2. B. C. C.
32 – 47	2. 1. 1. 1. 2. B. C. C. 2. B. C. E. 2. B. C. E.
48 – 63	2. 1. 1. 1. 2. B. C. C. 2. B. C. C. 2. B. C. C.
64 – 79	2. 0. 0. 0. 2. B. C. C. 2. B. C. E. 2. B. C. F.
80 – 95	2. 0. 0. 0. 2. B. C. C. 2. B. C. C. 2. B. C. C.
96 – 111	2. 0. 0. 0. 2. B. C. C. 2. B. C. E. 2. B. C. E.
112 – 127	2. 0. 0. 0. 2. B. C. C. 2. B. C. C. 2. B. C. C.
128 – 143	2. 1. 1. 1. 2. B. C. C. 2. B. C. E. 2. B. C. F.
144 – 159	2. 1. 1. 1. 2. B. C. C. 2. B. C. C. 2. B. C. C.
160 – 175	2. 1. 1. 1. 2. B. C. C. 2. B. C. E. 2. B. C. E.
176 – 191	2. 1. 1. 1. 2. B. C. C. 2. B. C. C. 2. B. C. C.
192 – 207	2. 0. 0. 0. 2. B. C. C. 2. B. C. E. 2. B. C. F.
208 – 223	2. 0. 0. 0. 2. B. C. C. 2. B. C. C. 2. B. C. C.
224 – 239	2. 0. 0. 0. 2. B. C. C. 2. B. C. E. 2. B. C. E.
240 – 255	2. 0. 0. 0. 2. B. C. C. 2. B. C. C. 2. B. C. C.

BVH-1100A

MB7052-R3CA
PROGRAMMED DATA

WORD (ADDRESS)	DATA OUTPUTS (IN HEXADECIMAL)
0 – 15	9. B. 9. B. 0. 0. 0. 0. 9. B. 9. B. 2. 2. 2. 2.
16 – 31	9. B. 9. B. 0. 1. 0. 1. B. B. B. B. 2. 3. 2. 3.
32 – 47	9. B. 9. B. 2. 2. 2. 2. 9. B. 9. B. 2. 2. 2. 2.
48 – 63	B. B. B. B. D. B. 3. B. B. B. B. B. 2. 3. 2. 3.
64 – 79	9. B. 9. B. 2. 2. 2. 2. 9. B. 9. B. 2. 2. 2. 2.
80 – 95	B. B. B. B. 3. B. F. B. B. B. B. B. 2. 3. 2. 3.
96 – 111	9. B. 9. B. D. B. F. B. B. B. B. B. 2. 2. 2. 2.
112 – 127	9. B. 9. B. D. B. F. B. B. B. B. B. 2. 3. 2. 3.
128 – 143	9. B. 9. B. 0. 0. 0. 0. 9. B. 9. B. 2. 2. 2. 2.
144 – 159	9. B. 9. B. 0. 1. 0. 1. B. B. B. B. 2. 3. 2. 3.
160 – 175	9. B. 9. B. 4. 4. 5. 5. B. B. B. B. 2. 2. 2. 2.
176 – 191	9. B. B. B. D. B. 3. B. B. B. B. B. 2. 3. 2. 3.
192 – 207	9. B. 9. B. 7. 7. 6. 6. B. B. B. B. 2. 2. 2. 2.
208 – 223	B. B. 9. B. 3. B. F. B. B. B. B. B. 2. 3. 2. 3.
224 – 239	9. B. 9. B. D. B. F. B. B. B. B. B. 2. 2. 2. 2.
240 – 255	9. B. 9. B. D. B. F. B. B. B. B. B. 2. 3. 2. 3.

MB7052-R4CA
PROGRAMMED DATA

WORD (ADDRESS)	DATA OUTPUTS (IN HEXADECIMAL)
0 – 15	3. 7. B. F. 2. 7. B. F. 1. 6. B. F. 0. 5. A. F.
16 – 31	0. 5. A. F. 4. 9. E. F. 8. D. E. F. C. D. E. F.
32 – 47	3. 7. B. F. 2. 7. B. F. 1. 6. B. F. 5. 5. A. F.
48 – 63	5. 5. A. F. 4. 9. E. F. 8. D. E. F. C. D. E. F.
64 – 79	3. 7. B. F. 7. 7. B. F. 6. 6. B. F. A. A. A. F.
80 – 95	A. A. A. F. 9. 9. E. F. D. D. E. F. C. D. E. F.
96 – 111	3. 7. B. F. 7. 7. B. F. B. B. B. F. F. F. F. F.
112 – 127	F. F. F. F. E. E. E. F. D. D. E. F. C. D. E. F.
128 – 143	0. 5. A. F. 0. 5. A. F. 0. 5. A. F. 0. 5. A. F.
144 – 159	0. 5. A. F. 0. 5. A. F. 0. 5. A. F. 0. 5. A. F.
160 – 175	0. 5. A. F. 0. 5. A. F. 0. 5. A. F. 0. 5. A. F.
176 – 191	0. 5. A. F. 0. 5. A. F. 0. 5. A. F. 0. 5. A. F.
192 – 207	0. 5. A. F. 0. 5. A. F. 0. 5. A. F. 0. 5. A. F.
208 – 223	0. 5. A. F. 0. 5. A. F. 0. 5. A. F. 0. 5. A. F.
224 – 239	0. 5. A. F. 0. 5. A. F. 0. 5. A. F. 0. 5. A. F.
240 – 255	0. 5. A. F. 0. 5. A. F. 0. 5. A. F. 0. 5. A. F.

MB7052-R5CA
PROGRAMMED DATA

WORD (ADDRESS)	DATA OUTPUTS (IN HEXADECIMAL)
0 – 15	0. 0. 0. 0. 0. 6. 6. 6. A. A. A. A. E. E. E.
16 – 31	0. 0. 0. 0. 0. 6. 6. 6. A. A. A. A. E. E. E.
32 – 47	0. 0. 0. 0. 6. 6. 6. A. A. A. A. A. E. E. E.
48 – 63	0. 0. 0. 6. 6. 6. A. A. A. A. A. E. E. E. E.
64 – 79	0. 0. 6. 6. 6. A. A. A. A. A. E. E. E. E. 1.
80 – 95	6. 6. 6. 6. A. A. A. A. A. A. E. E. E. E. 1.
96 – 111	6. 6. 6. A. A. A. A. A. A. E. E. E. E. E. 1.
112 – 127	6. 6. A. A. A. A. A. A. E. E. E. E. E. 1. 1.
128 – 143	A. A. A. A. A. A. A. E. E. E. E. E. 1. 1. 1.
144 – 159	A. A. A. A. A. A. E. E. E. E. E. 1. 1. 1. 1.
160 – 175	A. A. A. E. E. E. E. E. E. 1. 1. 1. 1. 1. 1.
176 – 191	A. A. A. E. E. E. E. E. E. 1. 1. 1. 1. 1. 1.
192 – 207	A. E. E. E. E. E. E. E. E. 1. 1. 1. 1. 1. 1.
208 – 223	E. E. E. E. E. E. E. 1. 1. 1. 1. 1. 1. 1. 1.
224 – 239	E. E. E. E. E. 1. 1. 1. 1. 1. 1. 1. 1. 1. 1.
240 – 255	E. E. E. E. 1. 1. 1. 1. 1. 1. 1. 1. 1. 1. 1.

MB7052-R8CA
PROGRAMMED DATA

WORD (ADDRESS)	DATA OUTPUTS (IN HEXADECIMAL)
0 – 15	A. 1. A. 7. 4. 4. 1. 1. A. 1. A. 7. 7. 7. 1. 1.
16 – 31	B. 3. B. 8. 7. 7. 2. 2. B. 3. B. 8. 9. 9. 2. 2.
32 – 47	C. 5. C. A. A. A. 4. 4. C. 5. C. A. D. D. 6. 6.
48 – 63	D. 9. D. E. F. F. B. B. D. 9. D. E. F. F. E. E.
64 – 79	A. 1. A. 7. 4. 4. 1. 1. A. 1. A. 7. 7. 7. 1. 1.
80 – 95	B. 3. B. 8. 7. 7. 2. 2. B. 3. B. 8. 9. 9. 2. 2.
96 – 111	C. 5. C. A. A. A. 4. 4. C. 5. C. A. D. D. 6. 6.
112 – 127	D. 9. D. E. F. F. B. B. D. 9. D. E. F. F. E. E.
128 – 143	A. 1. A. 7. 4. 4. 1. 1. A. 1. A. 7. 7. 7. 1. 1.
144 – 159	B. 3. B. 8. 7. 7. 2. 2. B. 3. B. 8. 9. 9. 2. 2.
160 – 175	C. 5. C. A. A. A. 4. 4. C. 5. C. A. A. A. 3. 3.
176 – 191	D. 9. D. E. F. F. A. A. D. 9. D. E. E. E. 9. 9.
192 – 207	A. 1. A. 7. 4. 4. 1. 1. A. 1. A. 7. 7. 7. 1. 1.
208 – 223	B. 3. B. 8. 7. 7. 2. 2. B. 3. B. 8. 9. 9. 0. 0.
224 – 239	C. 5. C. A. A. A. 4. 4. C. 5. C. A. A. A. 1. 1.
240 – 255	D. 7. D. C. F. F. A. A. D. 7. D. C. B. B. 4. 4.

MB7052-T2CA
PROGRAMMED DATA

WORD (ADDRESS)	DATA OUTPUTS (IN HEXADECIMAL)
0 – 15	7. 7. F. F. F. F. F. F. 7. 7. F. D. F. E. F. F.
16 – 31	7. 7. F. F. F. F. F. F. 7. 7. F. E. F. D. F. F.
32 – 47	F. F. F. F. F. F. F. F. C. C. C. D. C. E. F. F.
48 – 63	F. F. F. F. F. F. F. F. C. C. C. E. C. D. F. F.
64 – 79	7. 7. F. F. F. F. F. F. 7. 7. F. D. F. E. F. F.
80 – 95	7. 7. F. F. F. F. F. F. 7. 7. F. E. F. D. F. F.
96 – 111	F. F. F. F. F. F. F. F. C. C. C. D. C. E. F. F.
112 – 127	F. F. F. F. F. F. F. F. C. C. C. E. C. D. F. F.
128 – 143	7. 7. F. F. F. F. F. F. 7. 7. F. D. F. E. F. F.
144 – 159	7. 7. F. F. F. F. F. F. 7. 7. F. E. F. D. F. F.
160 – 175	F. F. F. F. F. F. F. F. D. D. D. D. D. D. D. D.
176 – 191	F. F. F. F. F. F. F. F. E. E. E. E. E. E. E. E.
192 – 207	F. F. F. F. F. F. F. F. F. F. D. F. E. F. F. F.
208 – 223	F. F. F. F. F. F. F. F. F. F. F. E. F. D. F. F.
224 – 239	E. E. E. E. E. E. E. E. C. C. C. C. C. C. C. C.
240 – 255	D. D. D. D. D. D. D. D. C. C. C. C. C. C. C. C.

MB7052-TAM4
PROGRAMMED DATA

WORD (ADDRESS)	DATA OUTPUTS (IN HEXA-DECIMAL)
0 – 15	0. 1. 3. 0. 3. 0. 0. 1. 1. 0. 0. 3. 0. 3. 1. 0.
16 – 31	2. 1. 3. 2. 3. 2. 2. 1. 1. 2. 2. 3. 2. 3. 1. 2.
32 – 47	0. 0. 0. 0. 0. 0. 0. 0. 0. 0. 0. 0. 0. 0. 0. 0.
48 – 63	0. 0. 0. 0. 0. 0. 0. 0. 0. 0. 0. 0. 0. 0. 0. 0.
64 – 79	0. 0. 0. 0. 0. 0. 0. 0. 0. 0. 0. 0. 0. 0. 0. 0.
80 – 95	0. 0. 0. 0. 0. 0. 0. 0. 0. 0. 0. 0. 0. 0. 0. 0.
96 – 111	0. 0. 0. 0. 0. 0. 0. 0. 0. 0. 0. 0. 0. 0. 0. 0.
112 – 127	0. 0. 0. 0. 0. 0. 0. 0. 0. 0. 0. 0. 0. 0. 0. 0.
128 – 143	0. 0. 0. 0. 0. 0. 0. 0. 0. 0. 0. 0. 0. 0. 0. 0.
144 – 159	0. 0. 0. 0. 0. 0. 0. 0. 0. 0. 0. 0. 0. 0. 0. 0.
160 – 175	0. 0. 0. 0. 0. 0. 0. 0. 0. 0. 0. 0. 0. 0. 0. 0.
176 – 191	0. 0. 0. 0. 0. 0. 0. 0. 0. 0. 0. 0. 0. 0. 0. 0.
192 – 207	0. 0. 0. 0. 0. 0. 0. 0. 0. 0. 0. 0. 0. 0. 0. 0.
208 – 223	0. 0. 0. 0. 0. 0. 0. 0. 0. 0. 0. 0. 0. 0. 0. 0.
224 – 239	0. 0. 0. 0. 0. 0. 0. 0. 0. 0. 0. 0. 0. 0. 0. 0.
240 – 255	0. 0. 0. 0. 0. 0. 0. 0. 0. 0. 0. 0. 0. 0. 0. 0.

MB7052-TAM5
PROGRAMMED DATA

WORD (ADDRESS)	DATA OUTPUTS (IN HEXA-DECIMAL)
0 – 15	1. 1. 1. 1. 1. 0. 1. 0. 1. 1. 1. 1. 1. 0. 1. 0.
16 – 31	1. 1. 1. 1. 1. 0. 1. 0. 1. 1. 1. 1. 1. 0. 1. 0.
32 – 47	1. 1. 1. 1. 1. 1. 0. 0. 1. 1. 1. 1. 1. 1. 0. 0.
48 – 63	1. 1. 1. 1. 1. 1. 0. 0. 1. 1. 1. 1. 1. 1. 0. 0.
64 – 79	1. 1. 1. 1. 1. 1. 1. 1. 1. 1. 1. 1. 1. 1. 1. 1.
80 – 95	1. 1. 1. 1. 1. 1. 1. 1. 1. 1. 1. 1. 1. 1. 1. 1.
96 – 111	1. 1. 1. 1. 1. 1. 1. 1. 1. 1. 1. 1. 1. 1. 1. 1.
112 – 127	1. 1. 1. 1. 1. 1. 1. 1. 1. 1. 1. 1. 1. 1. 1. 1.
128 – 143	1. 1. 1. 1. 1. 1. 1. 1. 1. 1. 1. 1. 1. 1. 1. 1.
144 – 159	1. 1. 1. 1. 1. 1. 1. 1. 1. 1. 1. 1. 1. 1. 1. 1.
160 – 175	1. 1. 1. 1. 1. 1. 1. 1. 1. 1. 1. 1. 1. 1. 1. 1.
176 – 191	1. 1. 1. 1. 1. 1. 1. 1. 1. 1. 1. 1. 1. 1. 1. 1.
192 – 207	1. 1. 1. 1. 1. 1. 1. 1. 1. 1. 1. 1. 1. 1. 1. 1.
208 – 223	1. 1. 1. 1. 1. 1. 1. 1. 1. 1. 1. 1. 1. 1. 1. 1.
224 – 239	1. 1. 1. 1. 1. 1. 1. 1. 1. 1. 1. 1. 1. 1. 1. 1.
240 – 255	1. 1. 1. 1. 1. 1. 1. 1. 1. 1. 1. 1. 1. 1. 1. 1.

MB7052-TAM6
PROGRAMMED DATA

WORD (ADDRESS)	DATA OUTPUTS (IN HEXA-DECIMAL)
0 – 15	0. 0. 0. 0. 3. 0. 3. 0. 0. 0. 0. 1. 1. 2. 0. 3. 1.
16 – 31	0. 0. 2. 2. 1. 0. 3. 2. 0. 0. 3. 3. 0. 0. 3. 3.
32 – 47	0. 0. 0. 0. 3. 0. 3. 0. 0. 0. 0. 1. 1. 2. 0. 3. 1.
48 – 63	0. 0. 2. 2. 1. 0. 3. 2. 0. 0. 3. 3. 0. 0. 3. 3.
64 – 79	0. 0. 0. 0. 3. 0. 3. 0. 0. 0. 0. 1. 1. 2. 0. 3. 1.
80 – 95	0. 0. 2. 2. 1. 0. 3. 2. 0. 0. 3. 3. 0. 0. 3. 3.
96 – 111	0. 0. 0. 0. 3. 0. 3. 0. 0. 0. 0. 1. 1. 2. 0. 3. 1.
112 – 127	0. 0. 2. 2. 1. 0. 3. 2. 0. 0. 3. 3. 0. 0. 3. 3.
128 – 143	0. 0. 0. 0. 3. 0. 3. 0. 0. 0. 0. 1. 1. 2. 0. 3. 1.
144 – 159	0. 0. 2. 2. 1. 0. 3. 2. 0. 0. 3. 3. 0. 0. 3. 3.
160 – 175	4. 4. 4. 4. 7. 4. 7. 4. 4. 4. 5. 5. 6. 4. 7. 5.
176 – 191	4. 4. 6. 6. 5. 4. 7. 6. 4. 4. 7. 7. 4. 4. 7. 7.
192 – 207	8. 8. 8. 8. B. 8. B. 8. 8. 8. 9. 9. A. 8. B. 9.
208 – 223	8. 8. A. A. 9. 8. B. A. 8. 8. B. B. 8. 8. B. B.
224 – 239	C. C. C. C. F. C. F. C. C. C. C. D. D. E. C. F. D.
240 – 255	C. C. E. E. D. C. F. E. C. C. F. F. C. C. F. F.

MB7052-TAM7
PROGRAMMED DATA

WORD (ADDRESS)	DATA OUTPUTS (IN HEXA-DECIMAL)
0 – 15	1. 0. 1. 0. 1. 0. 1. 0. 1. 0. 1. 0. 1. 4. 1. 4.
16 – 31	1. 1. 0. 0. 1. 1. 0. 0. 1. 1. 0. 0. 1. 1. 2. 2.
32 – 47	9. 8. 9. 8. 9. 8. 9. 8. 9. 8. 9. 8. 9. C. 9. C.
48 – 63	1. 1. 0. 0. 1. 1. 0. 0. 1. 1. 0. 0. 1. 1. 2. 2.
64 – 79	1. 0. 1. 0. 1. 0. 1. 0. 1. 0. 1. 0. 1. 4. 1. 4.
80 – 95	9. 9. 8. 8. 9. 9. 8. 8. 9. 9. 8. 8. 9. 9. A. A.
96 – 111	9. 8. 9. 8. 9. 8. 9. 8. 9. 8. 9. 8. 9. C. 9. C.
112 – 127	9. 9. 8. 8. 9. 9. 8. 8. 9. 9. 8. 8. 9. 9. A. A.
128 – 143	0. 0. 0. 0. 0. 0. 0. 0. 0. 0. 0. 0. 0. 0. 0. 0.
144 – 159	0. 0. 0. 0. 0. 0. 0. 0. 0. 0. 0. 0. 0. 0. 0. 0.
160 – 175	0. 0. 0. 0. 0. 0. 0. 0. 0. 0. 0. 0. 0. 0. 0. 0.
176 – 191	0. 0. 0. 0. 0. 0. 0. 0. 0. 0. 0. 0. 0. 0. 0. 0.
192 – 207	0. 0. 0. 0. 0. 0. 0. 0. 0. 0. 0. 0. 0. 0. 0. 0.
208 – 223	0. 0. 0. 0. 0. 0. 0. 0. 0. 0. 0. 0. 0. 0. 0. 0.
224 – 239	0. 0. 0. 0. 0. 0. 0. 0. 0. 0. 0. 0. 0. 0. 0. 0.
240 – 255	0. 0. 0. 0. 0. 0. 0. 0. 0. 0. 0. 0. 0. 0. 0. 0.

MB7052-TAM9
PROGRAMMED DATA

WORD (ADDRESS)	DATA OUTPUTS (IN HEXA-DECIMAL)
0 – 15	7. 7. 7. 7. 5. 5. 5. 7. 7. 7. 7. 7. 1. 1. 1. 3.
16 – 31	3. 3. 3. 3. 1. 1. 1. 3. 3. 3. 3. 3. 5. 5. 5. 7.
32 – 47	F. F. F. 7. D. D. D. 7. F. F. F. 7. 9. 9. 9. 3.
48 – 63	B. B. B. 3. 9. 9. 9. 3. B. B. B. 3. D. D. D. 7.
64 – 79	6. 6. 7. 7. 4. 4. 5. 7. 6. 6. 7. 7. 0. 0. 1. 3.
80 – 95	2. 2. 3. 3. 0. 0. 1. 3. 2. 2. 3. 3. 4. 4. 5. 7.
96 – 111	E. E. F. 7. C. C. D. 7. E. E. F. 7. 8. 8. 9. 3.
112 – 127	A. A. B. 3. 8. 8. 9. 3. A. A. B. 3. C. C. D. 7.
128 – 143	0. 0. 0. 0. 0. 0. 0. 0. 0. 0. 0. 0. 0. 0. 0. 0.
144 – 159	0. 0. 0. 0. 0. 0. 0. 0. 0. 0. 0. 0. 0. 0. 0. 0.
160 – 175	0. 0. 0. 0. 0. 0. 0. 0. 0. 0. 0. 0. 0. 0. 0. 0.
176 – 191	0. 0. 0. 0. 0. 0. 0. 0. 0. 0. 0. 0. 0. 0. 0. 0.
192 – 207	0. 0. 0. 0. 0. 0. 0. 0. 0. 0. 0. 0. 0. 0. 0. 0.
208 – 223	0. 0. 0. 0. 0. 0. 0. 0. 0. 0. 0. 0. 0. 0. 0. 0.
224 – 239	0. 0. 0. 0. 0. 0. 0. 0. 0. 0. 0. 0. 0. 0. 0. 0.
240 – 255	0. 0. 0. 0. 0. 0. 0. 0. 0. 0. 0. 0. 0. 0. 0. 0.

MB7052-TAMA
PROGRAMMED DATA

WORD (ADDRESS)	DATA OUTPUTS (IN HEXA-DECIMAL)
0 – 15	9. 9. 9. 9. 9. 9. 9. 9. 9. 9. 9. A. A. 9. A. A.
16 – 31	9. 9. 9. 9. 9. 9. 9. 9. 9. 9. 9. A. A. 9. A. A.
32 – 47	9. 9. 9. 9. 9. 9. 9. 9. 9. 9. 9. A. A. 9. A. A.
48 – 63	9. 9. 9. 9. 9. 9. 9. 9. 9. 9. 9. A. A. 9. A. A.
64 – 79	9. 9. 9. 9. 9. 9. 9. 9. 9. 9. 9. A. A. 9. A. A.
80 – 95	1. 1. 1. 1. 1. 1. 1. 1. 1. 1. 1. 1. 2. 2. 1. 2. 2.
96 – 111	9. 9. 9. 9. 9. 9. 9. 9. 9. 9. 9. A. A. 9. A. A.
112 – 127	1. 1. 1. 1. 1. 1. 1. 1. 1. 1. 1. 1. 2. 2. 1. 2. 2.
128 – 143	9. 9. 9. 9. D. D. D. D. 9. 9. 9. A. E. D. E. E.
144 – 159	9. 9. 9. 9. D. D. D. D. 9. 9. 9. A. E. D. E. E.
160 – 175	1. 1. 1. 1. 5. 5. 5. 5. 1. 1. 1. 2. 6. 5. 6. 6.
176 – 191	1. 1. 1. 1. 5. 5. 5. 5. 1. 1. 1. 2. 6. 5. 6. 6.
192 – 207	9. 9. 9. 9. D. D. D. D. 9. 9. 9. A. E. D. E. E.
208 – 223	1. 1. 1. 1. 5. 5. 5. 5. 1. 1. 1. 2. 6. 5. 6. 6.
224 – 239	1. 1. 1. 1. 5. 5. 5. 5. 1. 1. 1. 2. 6. 5. 6. 6.
240 – 255	1. 1. 1. 1. 5. 5. 5. 5. 1. 1. 1. 2. 6. 5. 6. 6.

MB7052-TAMC
PROGRAMMED DATA

WORD (ADDRESS)	DATA OUTPUTS (IN HEXA-DECIMAL)
0 – 15	1. 1. 0. 1. 1. 0. 1. 1. 3. 3. 2. 3. 5. 4. 5. 5.
16 – 31	3. 3. 2. 3. 5. 4. 5. 5. 3. 3. 2. 3. 5. 4. 5. 5.
32 – 47	3. 3. 2. 3. 5. 4. 5. 5. 7. 7. 6. 7. 7. 6. 7. 7.
48 – 63	7. 7. 6. 7. 7. 6. 7. 7. 7. 7. 6. 7. 7. 6. 7. 7.
64 – 79	7. 7. 6. 7. 7. 6. 7. 7. 5. 5. 4. 5. 3. 2. 3. 3.
80 – 95	5. 5. 4. 5. 3. 2. 3. 3. 5. 5. 4. 5. 3. 2. 3. 3.
96 – 111	5. 5. 4. 5. 3. 2. 3. 3. 1. 1. 0. 1. 1. 0. 1. 1.
112 – 127	1. 1. 0. 1. 1. 0. 1. 1. 1. 1. 0. 1. 1. 0. 1. 1.
128 – 143	0. 0. 0. 0. 0. 0. 0. 0. 0. 0. 0. 0. 0. 0. 0. 0.
144 – 159	0. 0. 0. 0. 0. 0. 0. 0. 0. 0. 0. 0. 0. 0. 0. 0.
160 – 175	0. 0. 0. 0. 0. 0. 0. 0. 0. 0. 0. 0. 0. 0. 0. 0.
176 – 191	0. 0. 0. 0. 0. 0. 0. 0. 0. 0. 0. 0. 0. 0. 0. 0.
192 – 207	0. 0. 0. 0. 0. 0. 0. 0. 0. 0. 0. 0. 0. 0. 0. 0.
208 – 223	0. 0. 0. 0. 0. 0. 0. 0. 0. 0. 0. 0. 0. 0. 0. 0.
224 – 239	0. 0. 0. 0. 0. 0. 0. 0. 0. 0. 0. 0. 0. 0. 0. 0.
240 – 255	0. 0. 0. 0. 0. 0. 0. 0. 0. 0. 0. 0. 0. 0. 0. 0.

MB7052-TAMF
PROGRAMMED DATA

WORD (ADDRESS)	DATA OUTPUTS (IN HEXADECIMAL)
0 – 15	6. 6. 6. 7. 2. 2. 3. 6. 6. 6. 7. 2. 2. 2. 3.
16 – 31	6. 6. 6. 7. 6. 6. 6. 7. 2. 2. 2. 3. 2. 2. 2. 3.
32 – 47	6. 6. 6. 7. 2. 2. 2. 3. 6. 6. 6. 7. 2. 2. 2. 3.
48 – 63	6. 6. 6. 7. 6. 6. 6. 7. 2. 2. 2. 3. 2. 2. 2. 3.
64 – 79	4. 6. 4. 7. 0. 2. 0. 3. 4. 6. 4. 7. 0. 2. 0. 3.
80 – 95	4. 6. 4. 7. 4. 6. 4. 7. 0. 2. 0. 3. 0. 2. 0. 3.
96 – 111	6. 6. 6. 7. 0. 0. 0. 1. 6. 6. 6. 7. 0. 0. 0. 1.
112 – 127	6. 6. 6. 7. 6. 6. 6. 7. 0. 0. 0. 1. 0. 0. 0. 1.
128 – 143	4. 4. 4. 5. 0. 0. 0. 1. 4. 4. 4. 5. 0. 0. 0. 1.
144 – 159	4. 4. 4. 5. 4. 4. 4. 5. 0. 0. 0. 1. 0. 0. 0. 1.
160 – 175	4. 4. 4. 5. 0. 0. 0. 1. 4. 4. 4. 5. 0. 0. 0. 1.
176 – 191	4. 4. 4. 5. 4. 4. 4. 5. 0. 0. 0. 1. 0. 0. 0. 1.
192 – 207	4. 6. 4. 7. 0. 2. 0. 3. 4. 6. 4. 7. 0. 2. 0. 3.
208 – 223	4. 6. 4. 7. 4. 6. 4. 7. 0. 2. 0. 3. 0. 2. 0. 3.
224 – 239	6. 6. 6. 7. 0. 0. 0. 1. 6. 6. 6. 7. 0. 0. 0. 1.
240 – 255	6. 6. 6. 7. 6. 6. 6. 7. 0. 0. 0. 1. 0. 0. 0. 1.

MB7052-TAMG
PROGRAMMED DATA

WORD (ADDRESS)	DATA OUTPUTS (IN HEXADECIMAL)
0 – 15	0. 0. 4. 4. 7. 6. 0. 0. 0. 0. 0. 0. 7. 6. 4. 4.
16 – 31	0. 0. 0. 0. 7. 6. 4. 4. 0. 0. 0. 0. 7. 6. 4. 4.
32 – 47	8. 8. C. C. F. E. 8. 8. 8. 8. 8. 8. F. E. C. C.
48 – 63	8. 8. 8. 8. F. E. C. C. 8. 8. 8. 8. 8. F. E. C. C.
64 – 79	8. 8. C. C. F. E. 8. 8. 8. 8. 8. 8. F. E. C. C.
80 – 95	8. 8. 8. 8. F. E. C. C. 8. 8. 8. 8. F. E. C. C.
96 – 111	8. 8. C. C. F. E. 8. 8. 8. 8. 8. 8. F. E. C. C.
112 – 127	8. 8. 8. 8. F. E. C. C. 8. 8. 8. 8. F. E. C. C.
128 – 143	0. 0. 0. 0. 0. 0. 0. 0. 0. 0. 0. 0. 0. 0. 0. 0.
144 – 159	0. 0. 0. 0. 0. 0. 0. 0. 0. 0. 0. 0. 0. 0. 0. 0.
160 – 175	0. 0. 0. 0. 0. 0. 0. 0. 0. 0. 0. 0. 0. 0. 0. 0.
176 – 191	0. 0. 0. 0. 0. 0. 0. 0. 0. 0. 0. 0. 0. 0. 0. 0.
192 – 207	0. 0. 0. 0. 0. 0. 0. 0. 0. 0. 0. 0. 0. 0. 0. 0.
208 – 223	0. 0. 0. 0. 0. 0. 0. 0. 0. 0. 0. 0. 0. 0. 0. 0.
224 – 239	0. 0. 0. 0. 0. 0. 0. 0. 0. 0. 0. 0. 0. 0. 0. 0.
240 – 255	0. 0. 0. 0. 0. 0. 0. 0. 0. 0. 0. 0. 0. 0. 0. 0.

MB7052-TAMH
PROGRAMMED DATA

WORD (ADDRESS)	DATA OUTPUTS (IN HEXADECIMAL)
0 – 15	0. 0. 0. 0. 0. 0. 0. 0. 1. 1. 0. 1. 1. 1. 0. 1.
16 – 31	0. 0. 0. 0. 2. 2. 2. 0. 1. 1. 0. 1. 3. 3. 2. 1.
32 – 47	0. 0. 0. 0. 0. 0. 0. 0. 0. 0. 0. 0. 0. 0. 0. 0.
48 – 63	0. 0. 0. 0. 0. 0. 0. 0. 0. 0. 0. 0. 0. 0. 0. 0.
64 – 79	0. 0. 0. 0. 0. 0. 0. 0. 0. 0. 0. 0. 0. 0. 0. 0.
80 – 95	0. 0. 0. 0. 0. 0. 0. 0. 0. 0. 0. 0. 0. 0. 0. 0.
96 – 111	0. 0. 0. 0. 0. 0. 0. 0. 0. 0. 0. 0. 0. 0. 0. 0.
112 – 127	0. 0. 0. 0. 0. 0. 0. 0. 0. 0. 0. 0. 0. 0. 0. 0.
128 – 143	0. 0. 0. 0. 0. 0. 0. 0. 0. 0. 0. 0. 0. 0. 0. 0.
144 – 159	0. 0. 0. 0. 0. 0. 0. 0. 0. 0. 0. 0. 0. 0. 0. 0.
160 – 175	0. 0. 0. 0. 0. 0. 0. 0. 0. 0. 0. 0. 0. 0. 0. 0.
176 – 191	0. 0. 0. 0. 0. 0. 0. 0. 0. 0. 0. 0. 0. 0. 0. 0.
192 – 207	0. 0. 0. 0. 0. 0. 0. 0. 0. 0. 0. 0. 0. 0. 0. 0.
208 – 223	0. 0. 0. 0. 0. 0. 0. 0. 0. 0. 0. 0. 0. 0. 0. 0.
224 – 239	0. 0. 0. 0. 0. 0. 0. 0. 0. 0. 0. 0. 0. 0. 0. 0.
240 – 255	0. 0. 0. 0. 0. 0. 0. 0. 0. 0. 0. 0. 0. 0. 0. 0.

BVH-1100A

MB7053 (FUJITSU)
IM5624 (INTERSIL)
2048-BIT (512 X 4) P-ROM
—TOP VIEW—

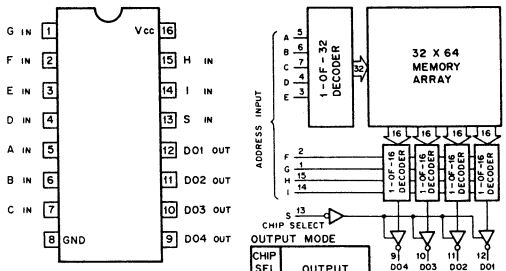

OUTPUT MODE

CHIP SEL S	OUTPUT
0	ENABLE
1	HI-IMPEDANCE

WORD / ADDRESS TABLE

WORD	ADDRESS INPUTS I	H	G	F	E	D	C	B	A
0	0	0	0	0	0	0	0	0	0
1	0	0	0	0	0	0	0	0	1
2	0	0	0	0	0	0	0	1	0
⋮	⋮	⋮	⋮	⋮	⋮	⋮	⋮	⋮	⋮
509	1	1	1	1	1	1	1	0	1
510	1	1	1	1	1	1	1	1	0
511	1	1	1	1	1	1	1	1	1

DATA CODE / ACTUAL DATA

DATA CODE		ACTUAL DATA D04	D03	D02	D01
0	0	0	0	0	0
1	1	0	0	0	1
2	2	0	0	1	0
3	3	0	0	1	1
4	4	0	1	0	0
5	5	0	1	0	1
6	6	0	1	1	0
7	7	0	1	1	1
8	8	1	0	0	0
9	9	1	0	0	1
10	A	1	0	1	0
11	B	1	0	1	1
12	C	1	1	0	0
13	D	1	1	0	1
14	E	1	1	1	0
15	F	1	1	1	1

IN HEXADECIMAL
IN DECIMAL

MB7053-R3CB
PROGRAMMED DATA

WORD (ADDRESS)	DATA OUTPUTS (IN HEXADECIMAL)
0 – 15	9. B. 9. B. 0. 0. 0. 0. 9. B. 9. B. 2. 2. 2. 2.
16 – 31	9. B. 9. B. 0. 1. 0. 1. B. B. B. B. 2. 3. 2. 3.
32 – 47	9. B. 9. B. 2. 2. 2. 2. 9. B. 9. B. 2. 2. 2. 2.
48 – 63	B. B. B. B. D. B. 3. B. B. B. B. B. 2. 3. 2. 3.
64 – 79	9. B. 9. B. 2. 2. 2. 2. 9. B. 9. B. 2. 2. 2. 2.
80 – 95	B. B. B. B. 3. B. F. B. B. B. B. B. 2. 3. 2. 3.
96 – 111	9. B. 9. B. D. 2. F. 2. B. B. B. B. 2. 2. 2. 2.
112 – 127	9. B. 9. B. D. 2. F. 2. B. B. B. B. 2. 3. 2. 3.
128 – 143	9. B. 9. B. 0. 0. 0. 0. 9. B. 9. B. 2. 2. 2. 2.
144 – 159	9. B. 9. B. 0. 1. 0. 1. B. B. B. B. 2. 3. 2. 3.
160 – 175	9. B. 9. B. 4. 4. 5. 5. B. B. B. B. 2. 2. 2. 2.
176 – 191	9. B. B. B. D. B. 3. B. B. B. B. B. 2. 3. 2. 3.
192 – 207	9. B. 9. B. 7. 7. 6. 6. B. B. B. B. 2. 2. 2. 2.
208 – 223	B. B. 9. B. 3. B. F. B. B. B. B. B. 2. 3. 2. 3.
224 – 239	9. B. 9. B. D. B. F. B. B. B. B. B. 2. 2. 2. 2.
240 – 255	9. B. 9. B. D. B. F. B. B. B. B. B. 2. 3. 2. 3.
256 – 271	0. 0. 0. 0. 0. 0. 0. 0. 0. 0. 0. 0. 0. 0. 0. 0.
272 – 287	0. 0. 0. 0. 0. 0. 0. 0. 0. 0. 0. 0. 0. 0. 0. 0.
288 – 303	0. 0. 0. 0. 0. 0. 0. 0. 0. 0. 0. 0. 0. 0. 0. 0.
304 – 319	0. 0. 0. 0. 0. 0. 0. 0. 0. 0. 0. 0. 0. 0. 0. 0.
320 – 335	0. 0. 0. 0. 0. 0. 0. 0. 0. 0. 0. 0. 0. 0. 0. 0.
336 – 351	0. 0. 0. 0. 0. 0. 0. 0. 0. 0. 0. 0. 0. 0. 0. 0.
352 – 367	0. 0. 0. 0. 0. 0. 0. 0. 0. 0. 0. 0. 0. 0. 0. 0.
368 – 383	0. 0. 0. 0. 0. 0. 0. 0. 0. 0. 0. 0. 0. 0. 0. 0.
384 – 399	0. 0. 0. 0. 0. 0. 0. 0. 0. 0. 0. 0. 0. 0. 0. 0.
400 – 415	0. 0. 0. 0. 0. 0. 0. 0. 0. 0. 0. 0. 0. 0. 0. 0.
416 – 431	0. 0. 0. 0. 0. 0. 0. 0. 0. 0. 0. 0. 0. 0. 0. 0.
432 – 447	0. 0. 0. 0. 0. 0. 0. 0. 0. 0. 0. 0. 0. 0. 0. 0.
448 – 463	0. 0. 0. 0. 0. 0. 0. 0. 0. 0. 0. 0. 0. 0. 0. 0.
464 – 479	0. 0. 0. 0. 0. 0. 0. 0. 0. 0. 0. 0. 0. 0. 0. 0.
480 – 495	0. 0. 0. 0. 0. 0. 0. 0. 0. 0. 0. 0. 0. 0. 0. 0.
496 – 511	0. 0. 0. 0. 0. 0. 0. 0. 0. 0. 0. 0. 0. 0. 0. 0.

MB7053-R9CA
PROGRAMMED DATA

WORD (ADDRESS)	DATA OUTPUTS (IN HEXADECIMAL)
0 – 15	0. 4. 0. 4. 6. 6. 6. 6. 0. 4. 0. 4. 6. 6. 6. 6.
16 – 31	1. 5. 1. 5. 7. 7. 6. 6. 1. 3. 1. 4. 6. 6. 5. 5.
32 – 47	2. 6. 2. 7. 8. 8. 6. 6. 2. 3. 2. 5. 6. 6. 4. 4.
48 – 63	3. 7. 3. 8. 9. 9. 7. 7. 3. 3. 3. 6. 6. 6. 3. 3.
64 – 79	4. 9. 4. 9. A. A. 9. 9. 4. 4. 4. 6. 6. 6. 3. 3.
80 – 95	5. B. 5. B. B. B. C. C. 5. 4. 5. 7. 6. 6. 3. 3.
96 – 111	6. D. 6. C. D. D. F. F. 6. 5. 6. 8. 6. 6. 4. 4.
112 – 127	7. F. 7. E. F. F. F. F. 7. 6. 7. 9. 7. 7. 5. 5.
128 – 143	8. F. 8. F. F. F. F. F. 8. 7. 8. A. 8. 8. 6. 6.
144 – 159	9. F. 9. F. F. F. F. F. 9. 8. 9. B. A. A. 8. 8.
160 – 175	A. F. A. F. F. F. F. F. A. A. A. C. C. C. A. A.
176 – 191	B. F. B. F. F. F. F. F. B. C. B. E. E. E. C. C.
192 – 207	C. F. C. F. F. F. F. F. C. E. C. F. F. F. E. E.
208 – 223	D. F. D. F. F. F. F. F. D. F. D. F. F. F. F. F.
224 – 239	E. F. E. F. F. F. F. F. E. F. E. F. F. F. F. F.
240 – 255	F. F. F. F. F. F. F. F. F. F. F. F. F. F. F. F.
256 – 271	0. 4. 0. 4. 6. 6. 6. 6. 0. 4. 0. 4. 6. 6. 6. 6.
272 – 287	1. 4. 1. 5. 6. 6. 5. 5. 1. 3. 1. 4. 6. 6. 5. 5.
288 – 303	2. 4. 2. 6. 7. 7. 4. 4. 2. 2. 2. 4. 5. 5. 4. 4.
304 – 319	3. 4. 3. 7. 8. 8. 4. 4. 3. 2. 3. 4. 5. 5. 3. 3.
320 – 335	4. 5. 4. 8. 8. 8. 4. 4. 4. 2. 4. 4. 4. 4. 2. 2.
336 – 351	5. 6. 5. 9. 8. 8. 5. 5. 5. 2. 5. 5. 3. 3. 2. 2.
352 – 367	6. 7. 6. A. 9. 9. 6. 6. 6. 2. 6. 5. 4. 4. 2. 2.
368 – 383	7. 9. 7. B. A. A. 8. 8. 7. 2. 7. 6. 4. 4. 2. 2.
384 – 399	8. B. 8. D. C. C. B. B. 8. 3. 8. 7. 5. 5. 2. 2.
400 – 415	9. D. 9. F. E. E. E. E. 9. 4. 9. 8. 6. 6. 3. 3.
416 – 431	A. F. A. F. F. F. F. F. A. 4. A. 9. 7. 7. 4. 4.
432 – 447	B. F. B. F. F. F. F. F. B. 5. B. A. 8. 8. 5. 5.
448 – 463	C. F. C. F. F. F. F. F. C. 6. C. B. 9. 9. 6. 6.
464 – 479	D. F. D. F. F. F. F. F. D. 7. D. C. A. A. 7. 7.
480 – 495	E. F. E. F. F. F. F. F. E. 9. E. D. B. B. 8. 8.
496 – 511	F. F. F. F. F. F. F. F. A. F. E. C. C. A. A.

MB7053-365A
PROGRAMMED DATA

WORD (ADDRESS)	DATA OUTPUTS (IN HEXADECIMAL)
0 – 15	8. 8. 8. 8. 4. 0. 1. 1. 1. 1. 0. 0. 1. 0. 0. 0.
16 – 31	1. 1. 1. 1. 1. 1. 1. 1. 1. 1. 1. 1. 3. 2. 3. 3.
32 – 47	8. 8. 8. 8. 4. 0. 0. 0. 1. 1. 1. 0. 1. 0. 0. 1.
48 – 63	1. 1. 1. 1. 1. 1. 1. 1. 1. 1. 1. 1. 3. 2. 3. 3.
64 – 79	8. 8. 8. 8. 4. 0. 0. 1. 1. 0. 0. 1. 0. 1. 1. 1.
80 – 95	1. 1. 1. 1. 1. 1. 1. 1. 1. 1. 1. 1. 3. 2. 3. 3.
96 – 111	8. 8. 8. 8. 4. 1. 0. 0. 1. 1. 0. 1. 1. 1. 1. 1.
112 – 127	1. 1. 1. 1. 1. 1. 1. 1. 1. 1. 1. 1. 3. 2. 3. 3.
128 – 143	8. 8. 8. 8. 4. 0. 1. 1. 0. 0. 0. 0. 0. 0. 0. 0.
144 – 159	0. 0. 0. 0. 0. 0. 0. 0. 0. 0. 0. 0. 2. 3. 3. 3.
160 – 175	8. 8. 8. 8. 4. 0. 0. 0. 1. 1. 1. 1. 0. 0. 0. 0.
176 – 191	0. 0. 0. 0. 0. 0. 0. 0. 0. 0. 0. 0. 2. 3. 3. 3.
192 – 207	8. 8. 8. 8. 4. 1. 0. 0. 1. 1. 1. 1. 0. 0. 0. 0.
208 – 223	1. 1. 1. 1. 1. 1. 1. 1. 1. 1. 1. 1. 3. 2. 3. 3.
224 – 239	8. 8. 8. 8. 4. 1. 0. 1. 1. 0. 0. 0. 0. 0. 0. 0.
240 – 255	0. 0. 0. 0. 0. 0. 0. 0. 0. 0. 0. 0. 2. 3. 3. 3.
256 – 271	8. 8. 8. 8. 4. 1. 0. 0. 1. 1. 0. 1. 1. 1. 0. 0.
272 – 287	1. 1. 1. 1. 1. 1. 1. 1. 1. 1. 1. 1. 3. 2. 3. 3.
288 – 303	8. 8. 8. 8. 4. 0. 1. 0. 1. 0. 0. 1. 1. 0. 1. 1.
304 – 319	1. 1. 1. 1. 1. 1. 1. 1. 1. 1. 1. 1. 3. 2. 3. 3.
320 – 335	8. 8. 8. 8. 4. 0. 0. 1. 0. 1. 1. 1. 1. 1. 0. 0.
336 – 351	0. 0. 0. 0. 0. 0. 0. 0. 0. 0. 0. 0. 2. 3. 3. 3.
352 – 367	8. 8. 8. 8. 4. 1. 1. 0. 0. 0. 0. 1. 1. 1. 1. 1.
368 – 383	1. 1. 1. 1. 1. 1. 1. 1. 1. 1. 1. 1. 3. 2. 3. 3.
384 – 399	8. 8. 8. 8. 4. 0. 0. 0. 0. 1. 1. 1. 1. 1. 1. 1.
400 – 415	1. 1. 1. 1. 1. 1. 1. 1. 1. 1. 1. 1. 3. 2. 3. 3.
416 – 431	8. 8. 8. 8. 4. 0. 1. 1. 1. 1. 0. 0. 0. 0. 0. 0.
432 – 447	0. 0. 0. 0. 0. 0. 0. 0. 0. 0. 0. 0. 2. 3. 3. 3.
448 – 463	8. 8. 8. 8. 4. 0. 0. 0. 0. 0. 0. 0. 0. 0. 0. 0.
464 – 479	0. 0. 0. 0. 0. 0. 0. 0. 0. 0. 0. 0. 2. 3. 3. 3.
480 – 495	8. 8. 8. 8. 4. 0. 0. 0. 0. 0. 0. 0. 0. 0. 0. 0.
496 – 511	0. 0. 0. 0. 0. 0. 0. 0. 0. 0. 0. 0. 2. 3. 3. 3.

MB7053-366A
PROGRAMMED DATA

WORD (ADDRESS)	DATA OUTPUTS (IN HEXADECIMAL)
0 – 15	8. 8. 8. 8. 4. 1. 0. 0. 1. 1. 0. 1. 1. 1. 0. 0.
16 – 31	1. 1. 1. 1. 1. 1. 1. 1. 1. 1. 1. 1. 3. 2. 3. 3.
32 – 47	8. 8. 8. 8. 4. 0. 0. 1. 0. 0. 0. 0. 1. 0. 1. 0.
48 – 63	1. 1. 1. 1. 1. 1. 1. 1. 1. 1. 1. 1. 3. 2. 3. 3.
64 – 79	8. 8. 8. 8. 4. 0. 1. 0. 1. 0. 0. 1. 1. 0. 1. 1.
80 – 95	1. 1. 1. 1. 1. 1. 1. 1. 1. 1. 1. 1. 3. 2. 3. 3.
96 – 111	8. 8. 8. 8. 4. 1. 0. 1. 1. 0. 0. 0. 1. 1. 1. 1.
112 – 127	1. 1. 1. 1. 1. 1. 1. 1. 1. 1. 1. 1. 3. 2. 3. 3.
128 – 143	8. 8. 8. 8. 4. 1. 1. 1. 1. 1. 1. 0. 1. 0. 1. 0.
144 – 159	0. 0. 0. 0. 0. 0. 0. 0. 0. 0. 0. 0. 2. 3. 3. 3.
160 – 175	8. 8. 8. 8. 4. 0. 0. 1. 0. 0. 1. 1. 0. 0. 0. 0.
176 – 191	0. 0. 0. 0. 0. 0. 0. 0. 0. 0. 0. 0. 2. 3. 3. 3.
192 – 207	8. 8. 8. 8. 4. 1. 0. 1. 1. 1. 1. 1. 1. 1. 1. 1.
208 – 223	1. 1. 1. 1. 1. 1. 1. 1. 1. 1. 1. 1. 3. 2. 3. 3.
224 – 239	8. 8. 8. 8. 4. 1. 0. 1. 0. 0. 0. 0. 0. 0. 0. 0.
240 – 255	0. 0. 0. 0. 0. 0. 0. 0. 0. 0. 0. 0. 2. 3. 3. 3.
256 – 271	8. 8. 8. 8. 4. 1. 0. 0. 1. 1. 0. 1. 1. 1. 0. 0.
272 – 287	1. 1. 1. 1. 1. 1. 1. 1. 1. 1. 1. 1. 3. 2. 3. 3.
288 – 303	8. 8. 8. 8. 4. 0. 1. 0. 1. 0. 0. 1. 1. 0. 1. 1.
304 – 319	1. 1. 1. 1. 1. 1. 1. 1. 1. 1. 1. 1. 3. 2. 3. 3.
320 – 335	8. 8. 8. 8. 4. 0. 0. 1. 0. 1. 1. 1. 1. 1. 0. 0.
336 – 351	0. 0. 0. 0. 0. 0. 0. 0. 0. 0. 0. 0. 2. 3. 3. 3.
352 – 367	8. 8. 8. 8. 4. 1. 1. 0. 0. 0. 0. 1. 1. 1. 1. 1.
368 – 383	1. 1. 1. 1. 1. 1. 1. 1. 1. 1. 1. 1. 3. 2. 3. 3.
384 – 399	8. 8. 8. 8. 4. 0. 0. 0. 0. 1. 1. 1. 1. 1. 1. 1.
400 – 415	1. 1. 1. 1. 1. 1. 1. 1. 1. 1. 1. 1. 3. 2. 3. 3.
416 – 431	8. 8. 8. 8. 4. 1. 0. 0. 1. 1. 0. 0. 0. 0. 0. 0.
432 – 447	0. 0. 0. 0. 0. 0. 0. 0. 0. 0. 0. 0. 2. 3. 3. 3.
448 – 463	8. 8. 8. 8. 4. 0. 0. 0. 0. 0. 0. 0. 0. 0. 0. 0.
464 – 479	0. 0. 0. 0. 0. 0. 0. 0. 0. 0. 0. 0. 2. 3. 3. 3.
480 – 495	8. 8. 8. 8. 4. 0. 0. 0. 0. 0. 0. 0. 0. 0. 0. 0.
496 – 511	0. 0. 0. 0. 0. 0. 0. 0. 0. 0. 0. 0. 2. 3. 3. 3.

BVH-1100A

MB7054 (FUJITSU)
IM 5624 (INTERSIL)
4096-BIT(1024X4) PROM(3-STATE OUTPUT)

—TOP VIEW—

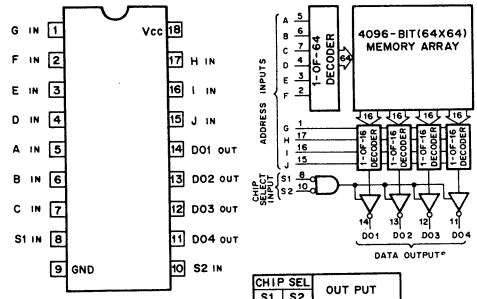

CHIP SEL		OUT PUT
S1	S2	
0	0	ENABLE
X	1	HI-
1	X	IMPEDANCE

WORD/ADDRESS TABLE

WORD	ADDRESS INPUTS									
	J	I	H	G	F	E	D	C	B	A
0	0	0	0	0	0	0	0	0	0	0
1	0	0	0	0	0	0	0	0	0	1
2	0	0	0	0	0	0	0	0	1	0
⋮	⋮	⋮	⋮	⋮	⋮	⋮	⋮	⋮	⋮	⋮
1021	1	1	1	1	1	1	1	1	0	1
1022	1	1	1	1	1	1	1	1	1	0
1023	1	1	1	1	1	1	1	1	1	1

DATA CODE/ACTUAL DATA

DATA CODE		ACTUAL DATA			
		DO4	DO3	DO2	DO1
0	0	0	0	0	0
1	1	0	0	0	1
2	2	0	0	1	0
3	3	0	0	1	1
4	4	0	1	0	0
5	5	0	1	0	1
6	6	0	1	1	0
7	7	0	1	1	1
8	8	1	0	0	0
9	9	1	0	0	1
10	A	1	0	1	0
11	B	1	0	1	1
12	C	1	1	0	0
13	D	1	1	0	1
14	E	1	1	1	0
15	F	1	1	1	1

IN HEXADECIMAL
IN DECIMAL

MB7054-T6CA
PROGRAMMED DATA

WORD (ADDRESS)	DATA OUTPUTS (IN HEXADECIMAL)
0 – 15	F. E. E. E. E. E. E. E. E. E. E. E. E. E. E. E.
16 – 31	E. E. E. E. E. E. E. E. E. E. E. E. E. E. E. E.
32 – 47	E. E. E. E. E. E. E. E. E. E. E. E. E. E. E. E.
48 – 63	8. 8. 8. 8. 8. 8. 8. 8. 8. 8. 8. 8. 8. 8. 8. 8.
64 – 79	7. 7. 6. 6. 6. 6. 6. 6. 6. 6. 6. 6. 6. 6. 6. 6.
80 – 95	6. 6. 6. 6. 6. 6. 6. 6. 6. 6. 6. 6. 6. 6. 6. 6.
96 – 111	6. 6. 6. 6. 6. 6. 6. 6. 4. 4. 4. 4. 4. 4. 4. 4.
112 – 127	4. 4. 4. 4. 4. 4. 4. 0. 0. 0. 0. 0. 0. 0. 0. 0.
128 – 143	7. 7. 7. 7. 7. 6. 6. 6. 6. 6. 6. 6. 6. 6. 6. 6.
144 – 159	6. 6. 6. 6. 6. 6. 6. 6. 6. 6. 6. 6. 6. 6. 6. 6.
160 – 175	4. 4. 4. 4. 4. 4. 4. 4. 4. 4. 4. 4. 4. 4. 4. 4.
176 – 191	4. 4. 4. 4. 4. 4. 4. 4. 4. 4. 4. 4. 0. 0. 0. 0.
192 – 207	7. 7. 7. 7. 7. 7. 7. 7. 7. 7. 7. 6. 6. 6. 6. 6.
208 – 223	6. 6. 6. 6. 6. 6. 6. 6. 4. 4. 4. 4. 4. 4. 4. 4.
224 – 239	4. 4. 4. 4. 4. 4. 4. 4. 4. 4. 4. 4. 4. 4. 4. 4.
240 – 255	4. 4. 4. 4. 4. 4. 4. 4. 4. 4. 4. 4. 4. 4. 0. 0.
256 – 271	7. 7. 7. 7. 7. 7. 7. 7. 7. 7. 7. 7. 7. 7. 7. 7.
272 – 287	4. 4. 4. 4. 4. 4. 4. 4. 4. 4. 4. 4. 4. 4. 4. 4.
288 – 303	4. 4. 4. 4. 4. 4. 4. 4. 4. 4. 4. 4. 4. 4. 4. 4.
304 – 319	4. 4. 4. 4. 4. 4. 4. 4. 4. 4. 4. 4. 4. 4. 0. 0.
320 – 335	7. 7. 7. 7. 7. 7. 7. 7. 7. 7. 5. 5. 5. 5. 5. 5.
336 – 351	5. 5. 5. 5. 5. 5. 5. 5. 5. 4. 4. 4. 4. 4. 4. 4.
352 – 367	4. 4. 4. 4. 4. 4. 4. 4. 4. 4. 4. 4. 4. 4. 4. 4.
368 – 383	4. 4. 4. 4. 4. 4. 4. 4. 4. 4. 4. 4. 4. 4. 0. 0.
384 – 399	7. 7. 7. 7. 7. 5. 5. 5. 5. 5. 5. 5. 5. 5. 5. 5.
400 – 415	5. 5. 5. 5. 5. 5. 5. 5. 5. 5. 5. 5. 5. 5. 5. 5.
416 – 431	4. 4. 4. 4. 4. 4. 4. 4. 4. 4. 4. 4. 4. 4. 4. 4.
432 – 447	4. 4. 4. 4. 4. 4. 4. 4. 4. 4. 4. 0. 0. 0. 0. 0.
448 – 463	7. 7. 5. 5. 5. 5. 5. 5. 5. 5. 5. 5. 5. 5. 5. 5.
464 – 479	5. 5. 5. 5. 5. 5. 5. 5. 5. 5. 5. 5. 5. 5. 5. 5.
480 – 495	5. 5. 5. 5. 5. 5. 5. 5. 4. 4. 4. 4. 4. 4. 4. 4.
496 – 511	4. 4. 4. 4. 4. 4. 0. 0. 0. 0. 0. 0. 0. 0. 0. 0.
512 – 527	7. 5. 5. 5. 5. 5. 5. 5. 5. 5. 5. 5. 5. 5. 5. 5.
528 – 543	5. 5. 5. 5. 5. 5. 5. 5. 5. 5. 5. 5. 5. 5. 5. 5.
544 – 559	5. 5. 5. 5. 5. 5. 5. 5. 5. 5. 5. 5. 5. 5. 5. 5.
560 – 575	0. 0. 0. 0. 0. 0. 0. 0. 0. 0. 0. 0. 0. 0. 0. 0.
576 – 591	7. 7. 5. 5. 5. 5. 5. 5. 5. 5. 5. 5. 5. 5. 5. 5.
592 – 607	5. 5. 5. 5. 5. 5. 5. 5. 5. 5. 5. 5. 5. 5. 5. 5.
608 – 623	5. 5. 5. 5. 5. 5. 5. 5. 1. 1. 1. 1. 1. 1. 1. 1.
624 – 639	1. 1. 1. 1. 1. 1. 1. 0. 0. 0. 0. 0. 0. 0. 0. 0.
640 – 655	7. 7. 7. 7. 7. 7. 5. 5. 5. 5. 5. 5. 5. 5. 5. 5.
656 – 671	5. 5. 5. 5. 5. 5. 5. 5. 5. 5. 5. 5. 5. 5. 5. 5.
672 – 687	1. 1. 1. 1. 1. 1. 1. 1. 1. 1. 1. 1. 1. 1. 1. 1.
688 – 703	1. 1. 1. 1. 1. 1. 1. 1. 1. 1. 1. 1. 0. 0. 0. 0.
704 – 719	7. 7. 7. 7. 7. 7. 7. 7. 7. 7. 5. 5. 5. 5. 5. 5.
720 – 735	5. 5. 5. 5. 5. 5. 5. 5. 1. 1. 1. 1. 1. 1. 1. 1.
736 – 751	1. 1. 1. 1. 1. 1. 1. 1. 1. 1. 1. 1. 1. 1. 1. 1.
752 – 767	1. 1. 1. 1. 1. 1. 1. 1. 1. 1. 1. 1. 1. 1. 0. 0.
768 – 783	7. 7. 7. 7. 7. 7. 7. 7. 7. 7. 7. 7. 7. 7. 7. 7.
784 – 799	1. 1. 1. 1. 1. 1. 1. 1. 1. 1. 1. 1. 1. 1. 1. 1.
800 – 815	1. 1. 1. 1. 1. 1. 1. 1. 1. 1. 1. 1. 1. 1. 1. 1.
816 – 831	1. 1. 1. 1. 1. 1. 1. 1. 1. 1. 1. 1. 1. 1. 1. 0.
832 – 847	7. 7. 7. 7. 7. 7. 7. 7. 7. 7. 3. 3. 3. 3. 3. 3.
848 – 863	3. 3. 3. 3. 3. 3. 3. 3. 1. 1. 1. 1. 1. 1. 1. 1.
864 – 879	1. 1. 1. 1. 1. 1. 1. 1. 1. 1. 1. 1. 1. 1. 1. 1.
880 – 895	1. 1. 1. 1. 1. 1. 1. 1. 1. 1. 1. 1. 1. 1. 0. 0.
896 – 911	7. 7. 7. 7. 7. 3. 3. 3. 3. 3. 3. 3. 3. 3. 3. 3.
912 – 927	3. 3. 3. 3. 3. 3. 3. 3. 3. 3. 3. 3. 3. 3. 3. 3.
928 – 943	1. 1. 1. 1. 1. 1. 1. 1. 1. 1. 1. 1. 1. 1. 1. 1.
944 – 959	1. 1. 1. 1. 1. 1. 1. 1. 1. 1. 1. 1. 0. 0. 0. 0.
960 – 975	7. 7. 3. 3. 3. 3. 3. 3. 3. 3. 3. 3. 3. 3. 3. 3.
976 – 991	3. 3. 3. 3. 3. 3. 3. 3. 3. 3. 3. 3. 3. 3. 3. 3.
992 – 1007	3. 3. 3. 3. 3. 3. 3. 3. 1. 1. 1. 1. 1. 1. 1. 1.
1008 – 1023	1. 1. 1. 1. 1. 1. 0. 0. 0. 0. 0. 0. 0. 0. 0. 0.

MB7054-T7CA
PROGRAMMED DATA

WORD (ADDRESS)	DATA OUTPUTS (IN HEXADECIMAL)
0 – 15	F. B. B. B. B. B. B. B. B. B. B. B. B. B. B. B.
16 – 31	B. B. B. B. B. B. B. B. B. B. B. B. B. B. B. B.
32 – 47	B. B. B. B. B. B. B. B. B. B. B. B. B. B. B. B.
48 – 63	8. 8. 8. 8. 8. 8. 8. 8. 8. 8. 8. 8. 8. 8. 8. 8.
64 – 79	F. F. B. B. B. B. B. B. B. B. B. B. B. B. B. B.
80 – 95	B. B. B. B. B. B. B. B. B. B. B. B. B. B. B. B.
96 – 111	B. B. B. B. B. B. B. B. A. A. A. A. A. A. A. A.
112 – 127	A. A. A. A. A. A. A. 8. 8. 8. 8. 8. 8. 8. 8. 8.
128 – 143	F. F. F. F. F. F. B. B. B. B. B. B. B. B. B. B.
144 – 159	B. B. B. B. B. B. B. B. B. B. B. B. B. B. B. B.
160 – 175	A. A. A. A. A. A. A. A. A. A. A. A. A. A. A. A.
176 – 191	A. A. A. A. A. A. A. A. A. A. A. A. 8. 8. 8. 8.
192 – 207	F. F. F. F. F. F. F. F. F. F. B. B. B. B. B. B.
208 – 223	B. B. B. B. B. B. B. B. A. A. A. A. A. A. A. A.
224 – 239	A. A. A. A. A. A. A. A. A. A. A. A. A. A. A. A.
240 – 255	A. A. A. A. A. A. A. A. A. A. A. A. A. A. 8. 8.
256 – 271	F. F. F. F. F. F. F. F. F. F. F. F. F. F. F. F.
272 – 287	A. A. A. A. A. A. A. A. A. A. A. A. A. A. A. A.
288 – 303	A. A. A. A. A. A. A. A. A. A. A. A. A. A. A. A.
304 – 319	A. A. A. A. A. A. A. A. A. A. A. A. A. A. A. 8.
320 – 335	F. F. F. F. F. F. F. F. F. F. E. E. E. E. E. E.
336 – 351	E. E. E. E. E. E. E. E. A. A. A. A. A. A. A. A.
352 – 367	A. A. A. A. A. A. A. A. A. A. A. A. A. A. A. A.
368 – 383	A. A. A. A. A. A. A. A. A. A. A. A. A. A. 8. 8.
384 – 399	F. F. F. F. F. E. E. E. E. E. E. E. E. E. E. E.
400 – 415	E. E. E. E. E. E. E. E. E. E. E. E. E. E. E. E.
416 – 431	A. A. A. A. A. A. A. A. A. A. A. A. A. A. A. A.
432 – 447	A. A. A. A. A. A. A. A. A. A. A. A. 8. 8. 8. 8.
448 – 463	F. F. E. E. E. E. E. E. E. E. E. E. E. E. E. E.
464 – 479	E. E. E. E. E. E. E. E. E. E. E. E. E. E. E. E.
480 – 495	E. E. E. E. E. E. E. E. A. A. A. A. A. A. A. A.
496 – 511	A. A. A. A. A. A. 8. 8. 8. 8. 8. 8. 8. 8. 8. 8.
512 – 527	F. B. B. B. B. B. B. B. B. B. B. B. B. B. B. B.
528 – 543	B. B. B. B. B. B. B. B. B. B. B. B. B. B. B. B.
544 – 559	B. B. B. B. B. B. B. B. B. B. B. B. B. B. B. B.
560 – 575	8. 8. 8. 8. 8. 8. 8. 8. 8. 8. 8. 8. 8. 8. 8. 8.
576 – 591	F. F. B. B. B. B. B. B. B. B. B. B. B. B. B. B.
592 – 607	B. B. B. B. B. B. B. B. B. B. B. B. B. B. B. B.
608 – 623	B. B. B. B. B. B. B. B. A. A. A. A. A. A. A. A.
624 – 639	A. A. A. A. A. A. 8. 8. 8. 8. 8. 8. 8. 8. 8. 8.
640 – 655	F. F. F. F. F. B. B. B. B. B. B. B. B. B. B. B.
656 – 671	B. B. B. B. B. B. B. B. B. B. B. B. B. B. B. B.
672 – 687	A. A. A. A. A. A. A. A. A. A. A. A. A. A. A. A.
688 – 703	A. A. A. A. A. A. A. A. A. A. A. 8. 8. 8. 8. 8.
704 – 719	F. F. F. F. F. F. F. F. F. F. B. B. B. B. B. B.
720 – 735	B. B. B. B. B. B. B. B. A. A. A. A. A. A. A. A.
736 – 751	A. A. A. A. A. A. A. A. A. A. A. A. A. A. A. A.
752 – 767	A. A. A. A. A. A. A. A. A. A. A. A. A. A. 8. 8.
768 – 783	F. F. F. F. F. F. F. F. F. F. F. F. F. F. F. F.
784 – 799	A. A. A. A. A. A. A. A. A. A. A. A. A. A. A. A.
800 – 815	A. A. A. A. A. A. A. A. A. A. A. A. A. A. A. A.
816 – 831	A. A. A. A. A. A. A. A. A. A. A. A. A. A. A. 8.
832 – 847	F. F. F. F. F. F. F. F. F. F. E. E. E. E. E. E.
848 – 863	E. E. E. E. E. E. E. E. A. A. A. A. A. A. A. A.
864 – 879	A. A. A. A. A. A. A. A. A. A. A. A. A. A. A. A.
880 – 895	A. A. A. A. A. A. A. A. A. A. A. A. A. A. 8. 8.
896 – 911	F. F. F. F. F. E. E. E. E. E. E. E. E. E. E. E.
912 – 927	E. E. E. E. E. E. E. E. E. E. E. E. E. E. E. E.
928 – 943	A. A. A. A. A. A. A. A. A. A. A. A. A. A. A. A.
944 – 959	A. A. A. A. A. A. A. A. A. A. A. A. 8. 8. 8. 8.
960 – 975	7. 7. 6. 6. 6. 6. 6. 6. 6. 6. 6. 6. 6. 6. 6. 6.
976 – 991	6. 6. 6. 6. 6. 6. 6. 6. 6. 6. 6. 6. 6. 6. 6. 6.
992 – 1007	6. 6. 6. 6. 6. 6. 6. 6. 2. 2. 2. 2. 2. 2. 2. 2.
1008 – 1023	2. 2. 2. 2. 2. 2. 2. 0. 0. 0. 0. 0. 0. 0. 0. 0.

8VH-1100A

MB7056 (FUJITSU)
IM5600 (INTERSIL)

256-BIT (32x 8) PROM (OPEN COLLECTOR)

–TOP VIEW–

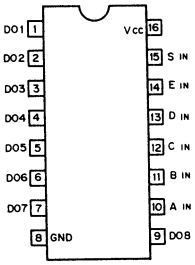

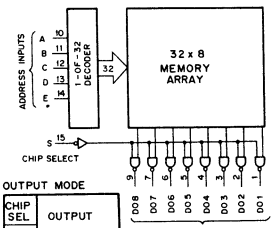

OUTPUT MODE

CHIP SEL	OUTPUT
S	
0	ENABLE
1	HIGH LEVEL

WORD / ADDRESS TABLE

WORD	ADDRESS INPUTS				
	E	D	C	B	A
0	0	0	0	0	0
1	0	0	0	0	1
2	0	0	0	1	0
⋮	⋮	⋮	⋮	⋮	⋮
29	1	1	1	0	1
30	1	1	1	1	0
31	1	1	1	1	1

DATA CODE / ACTUAL DATA

DATA CODE		ACTUAL DATA							
		DO8	DO7	DO6	DO5	DO4	DO3	DO2	DO1
0	00	0	0	0	0	0	0	0	0
1	01	0	0	0	0	0	0	0	1
2	02	0	0	0	0	0	0	1	0
⋮	⋮	⋮	⋮	⋮	⋮	⋮	⋮	⋮	⋮
8	08	0	0	0	0	1	0	0	0
9	09	0	0	0	0	1	0	0	1
10	0A	0	0	0	0	1	0	1	0
11	0B	0	0	0	0	1	0	1	1
12	0C	0	0	0	0	1	1	0	0
13	0D	0	0	0	0	1	1	0	1
14	0E	0	0	0	0	1	1	1	0
15	0F	0	0	0	0	1	1	1	1
16	10	0	0	0	1	0	0	0	0
17	11	0	0	0	1	0	0	0	1
⋮	⋮	⋮	⋮	⋮	⋮	⋮	⋮	⋮	⋮
238	EE	1	1	1	0	1	1	1	0
239	EF	1	1	1	0	1	1	1	1
240	F0	1	1	1	1	0	0	0	0
241	F1	1	1	1	1	0	0	0	1
242	F2	1	1	1	1	0	0	1	0
⋮	⋮	⋮	⋮	⋮	⋮	⋮	⋮	⋮	⋮
248	F8	1	1	1	1	1	0	0	0
249	F9	1	1	1	1	1	0	0	1
250	FA	1	1	1	1	1	0	1	0
251	FB	1	1	1	1	1	0	1	1
252	FC	1	1	1	1	1	1	0	0
253	FD	1	1	1	1	1	1	0	1
254	FE	1	1	1	1	1	1	1	0
255	FF	1	1	1	1	1	1	1	1

IN HEXA-DECIMAL
IN DECIMAL

MB7056-20CA
PROGRAMMED DATA

WORD (ADDRESS)	DATA OUTPUTS (IN HEXADECIMAL)
0 – 15	FF. FF. FF. 3C. FF. 7D. FF. 7D. FF. 3C. FF. 38. FF. 9F. FF. BF.
16 – 31	FF. 3C. FF. 3C. FF. 79. FF. 75. FF. 7D. FF. 7D. FF. AD. FF. BD.

MB7056-22C1
PROGRAMMED DATA

WORD (ADDRESS)	DATA OUTPUTS (IN HEXADECIMAL)
0 – 15	03. 07. 0B. 0F. 11. 13. 15. 17. FC. F8. F4. F0. EE. EC. EA. E8.
16 – 31	00. 00. 00. 00. 00. 00. 00. 00. 00. 00. 00. 00. 00. 00. 00. 00.

MB7056-25C1
PROGRAMMED DATA

WORD (ADDRESS)	DATA OUTPUTS (IN HEXADECIMAL)
0 – 15	FF. FE. FC. F8. F0. E0. C0. C0. C0. C0. F8. F8. F8. F8. FC. FE.
16 – 31	FE. FC. F8. F0. E0. C0. 80. 00. 00. 00. 00. 00. 00. 00. 00. 00.

MB7056-27C2
PROGRAMMED DATA

WORD (ADDRESS)	DATA OUTPUTS (IN HEXADECIMAL)
0 – 15	7E. 7E. 7D. 7D. 7B. 7B. 77. 67. 67. 67. 47. 47. 47. 47. 47. 47.
16 – 31	27. 27. 27. 27. 27. 27. 67. 67. 67. 77. 7B. 7B. 7D. 7D. 7E. 7E.

MB7056-29C1
PROGRAMMED DATA

WORD (ADDRESS)	DATA OUTPUTS (IN HEXADECIMAL)
0 – 15	3E. BE. BD. BD. BD. BD. B3. B3. B3. AB. EF. EF. DF. DF. DF. DF.
16 – 31	DF. DF. DF. DF. EF. EF. AB. B3. B3. B3. BD. BD. BD. BD. BE. 3E.

MB7056-TAME
PROGRAMMED DATA

WORD (ADDRESS)	DATA OUTPUTS (IN HEXADECIMAL)
0 – 15	C1. 04. F0. A8. E0. A0. E0. A2. C1. 04. F0. A8. E0. A0. E0. A2.
16 – 31	41. 04. F0. A8. E0. A0. E0. A2. C1. 04. F0. A8. E0. A0. E0. A2.

IM5600-TAM2
PROGRAMMED DATA

WORD (ADDRESS)	DATA OUTPUTS (IN HEXADECIMAL)
0 – 15	2F. 0E. 0D. 3F. 2F. 2F. 2F. 2F. 2F. 2F. 2F. 2F. 2F. 2F. 1D.
16 – 31	2F. 0E. 0D. 0C. 0B. 3F. 2F. 2F. 2F. 2F. 2F. 2F. 2F. 2F. 1B.

IM5600-TAM3
PROGRAMMED DATA

WORD (ADDRESS)	DATA OUTPUTS (IN HEXADECIMAL)
0 – 15	EF. CE. CD. 8C. 0B. 0A. FF. EF. EF. EF. EF. EF. EF. EF. EF. 1A.
16 – 31	EF. CE. CD. 8C. 0B. 0A. 09. 08. 07. 06. FF. EF. EF. EF. EF. 16.

MB7057 (FUJITSU)
IM5603A (INTERSIL)

1024-BIT (256x 4) PROM (OPEN-COLLECTOR OUTPUT)

–TOP VIEW–

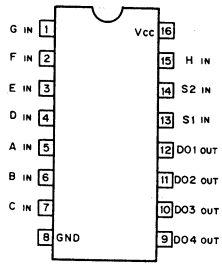

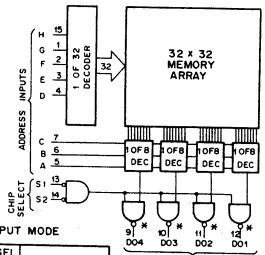

OUTPUT MODE

CHIP SEL		OUTPUT
S1	S2	
0	0	ENABLE
X	1	HI - LEVEL
1	X	

WORD/ADDRESS TABLE

WORD	ADDRESS INPUTS							
	H	G	F	E	D	C	B	A
0	0	0	0	0	0	0	0	0
1	0	0	0	0	0	0	0	1
2	0	0	0	0	0	0	1	0
⋮	⋮	⋮	⋮	⋮	⋮	⋮	⋮	⋮
253	1	1	1	1	1	1	0	1
254	1	1	1	1	1	1	1	0
255	1	1	1	1	1	1	1	1

DATA CODE/ACTUAL DATA

DATA CODE		ACTUAL DATA			
		DO4	DO3	DO2	DO1
0	0	0	0	0	0
1	1	0	0	0	1
2	2	0	0	1	0
3	3	0	0	1	1
4	4	0	1	0	0
5	5	0	1	0	1
6	6	0	1	1	0
7	7	0	1	1	1
8	8	1	0	0	0
9	9	1	0	0	1
10	A	1	0	1	0
11	B	1	0	1	1
12	C	1	1	0	0
13	D	1	1	0	1
14	E	1	1	1	0
15	F	1	1	1	1

IN HEXADECIMAL
IN DECIMAL

MB7057-R2CA
PROGRAMMED DATA

WORD (ADDRESS)	DATA OUTPUTS (IN HEXADECIMAL)
0 – 15	D. F. D. D. D. D. D. D. D. D. D. D. D. D. D. D.
16 – 31	E. C. E. A. 2. 2. 2. 2. 2. 2. 2. 2. 2. 2. 2. 2.
32 – 47	A. E. C. E. A. 2. 2. 2. 2. 2. 2. 2. 2. 2. 2. 2.
48 – 63	2. A. E. C. E. A. 2. 2. 2. 2. 2. 2. 2. 2. 2. 2.
64 – 79	2. 2. A. E. C. E. A. 2. 2. 2. 2. 2. 2. 2. 2. 2.
80 – 95	2. 2. 2. A. E. C. E. A. 2. 2. 2. 2. 2. 2. 2. 2.
96 – 111	2. 2. 2. 2. A. E. C. E. A. 2. 2. 2. 2. 2. 2. 2.
112 – 127	2. 2. 2. 2. 2. A. A. E. C. E. A. A. 2. 2. 2. 2.
128 – 143	2. 2. 2. 2. 2. 2. A. A. E. C. E. A. A. 2. 2. 2.
144 – 159	2. 2. 2. 2. 2. 2. 2. A. A. E. C. E. A. A. 2. 2.
160 – 175	2. 2. 2. 2. 2. 2. 2. 2. A. A. E. C. E. A. A. 2.
176 – 191	2. 2. 2. 2. 2. 2. 2. 2. 2. A. A. E. C. E. A. A.
192 – 207	A. 2. 2. 2. 2. 2. 2. 2. 2. A. A. A. E. C. E. A.
208 – 223	A. A. 2. 2. 2. 2. 2. 2. 2. 2. A. A. A. E. C. E.
224 – 239	A. A. A. 2. 2. 2. 2. 2. 2. 2. 2. A. A. A. E. C.
240 – 255	E. A. A. A. 2. 2. 2. 2. 2. 2. 2. 2. A. A. A. E.

BVH-1100A

MB8518 (FUJITSU)
I2708 (INTEL)
8192-BIT (1024 X 8) UV EPROM
— TOP VIEW —

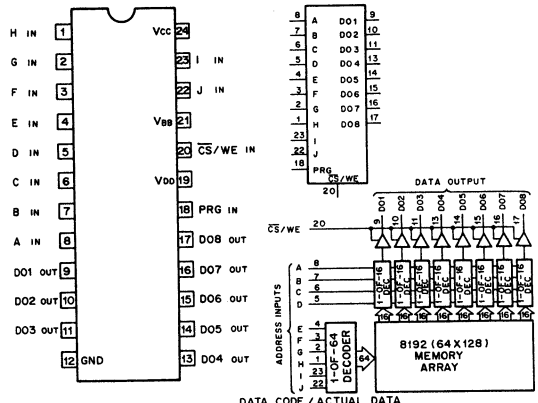

CS/WE	FUNCTION
0	OUTPUT ENABLE
1	HIGH OUTPUT IMP.
*+12V	PROGRAMMABLE

* SEE DATA BOOK FOR MORE DETAIL

WORD/ADDRESS TABLE

WORD	ADDRESS INPUTS J	I	H	G	F	E	D	C	B	A
0	0	0	0	0	0	0	0	0	0	0
1	0	0	0	0	0	0	0	0	0	1
2	0	0	0	0	0	0	0	0	1	0
⋮	⋮	⋮	⋮	⋮	⋮	⋮	⋮	⋮	⋮	⋮
1021	1	1	1	1	1	1	1	1	0	1
1022	1	1	1	1	1	1	1	1	1	0
1023	1	1	1	1	1	1	1	1	1	1

DATA CODE / ACTUAL DATA

DATA CODE		ACTUAL DATA DO8	DO7	DO6	DO5	DO4	DO3	DO2	DO1
0	00	0	0	0	0	0	0	0	0
1	01	0	0	0	0	0	0	0	1
⋮	⋮	⋮	⋮	⋮	⋮	⋮	⋮	⋮	⋮
9	09	0	0	0	0	1	0	0	1
10	0A	0	0	0	0	1	0	1	0
11	0B	0	0	0	0	1	0	1	1
12	0C	0	0	0	0	1	1	0	0
13	0D	0	0	0	0	1	1	0	1
14	0E	0	0	0	0	1	1	1	0
15	0F	0	0	0	0	1	1	1	1
16	10	0	0	0	1	0	0	0	0
⋮	⋮	⋮	⋮	⋮	⋮	⋮	⋮	⋮	⋮
241	F1	1	1	1	1	0	0	0	1
242	F2	1	1	1	1	0	0	1	0
⋮	⋮	⋮	⋮	⋮	⋮	⋮	⋮	⋮	⋮
254	FE	1	1	1	1	1	1	1	0
255	FF	1	1	1	1	1	1	1	1

IN DECIMAL — IN HEXADECIMAL

MB8518-C1CA
PROGRAMMED DATA

WORD (ADDRESS)	DATA OUTPUTS (IN HEXADECIMAL)
0 – 15	74. 74. 74. 74. 71. 6D. 69. E1. DF. E0. 20. 1F. 1E. 1D. 1C. 1B.
16 – 31	1A. 19. 19. 19. 18. 18. 18. 17. 17. 17. 16. 16. 16. 15. 15. 15.
32 – 47	95. 95. 95. 95. 95. 95. 95. 95. 95. 95. 95. 95. 95. 95. 95. 95.
48 – 63	95. 95. 95. 95. 95. 95. 95. 95. 95. 95. 95. 95. 95. 95. 95. 95.
64 – 79	94. 94. 94. 94. 94. 94. 94. 94. 94. 94. 94. 94. 94. 94. 94. 94.
80 – 95	94. 94. 94. 94. 94. 94. 94. 94. 94. 94. 94. 94. 94. 94. 94. 94.
96 – 111	93. 93. 93. 93. 93. 93. 93. 93. 93. 93. 93. 93. 93. 93. 93. 93.
112 – 127	93. 93. 93. 93. 93. 93. 93. 93. 93. 93. 93. 93. 93. 93. 93. 93.
128 – 143	93. 93. 93. 93. 93. 93. 93. 93. 93. 93. 93. 93. 93. 93. 93. 93.
144 – 159	93. 93. 93. 93. 93. 93. 93. 93. 93. 93. 93. 93. 93. 93. 93. 93.
160 – 175	93. 93. 93. 93. 93. 93. 93. 93. 93. 93. 93. 93. 93. 93. 93. 93.
176 – 191	93. 93. 93. 93. 93. 93. 93. 93. 93. 93. 93. 93. 93. 93. 93. 93.
192 – 207	93. 93. 93. 93. 93. 93. 93. 93. 93. 93. 93. 93. 93. 93. 93. 93.
208 – 223	93. 93. 93. 93. 93. 93. 93. 93. 93. 93. 93. 93. 93. 93. 93. 93.
224 – 239	93. 93. 93. 93. 93. 93. 93. 93. 93. 93. 93. 93. 93. 93. 93. 93.
240 – 255	93. 93. 93. 93. 93. 93. 93. 93. 93. 93. 93. 93. 93. 93. 93. 93.
256 – 271	74. 74. 74. 74. 71. 6D. 69. E1. DF. E0. 20. 1F. 1E. 1D. 1C. 1B.
272 – 287	1A. 19. 19. 19. 18. 18. 18. 17. 17. 17. 16. 16. 16. 15. 15. 15.
288 – 303	95. 95. 95. 95. 95. 95. 95. 95. 95. 95. 95. 95. 95. 95. 95. 95.
304 – 319	95. 95. 95. 95. 95. 95. 95. 95. 95. 95. 95. 95. 95. 95. 95. 95.
320 – 335	94. 94. 94. 94. 94. 94. 94. 94. 94. 94. 94. 94. 94. 94. 94. 94.
336 – 351	94. 94. 94. 94. 94. 94. 94. 94. 94. 94. 94. 94. 94. 94. 94. 94.
352 – 367	93. 93. 93. 93. 93. 93. 93. 93. 93. 93. 93. 93. 93. 93. 93. 93.
368 – 383	93. 93. 93. 93. 93. 93. 93. 93. 93. 93. 93. 93. 93. 93. 93. 93.
384 – 399	93. 93. 93. 93. 93. 93. 93. 93. 93. 93. 93. 93. 93. 93. 93. 93.
400 – 415	93. 93. 93. 93. 93. 93. 93. 93. 93. 93. 93. 93. 93. 93. 93. 93.
416 – 431	93. 93. 93. 93. 93. 93. 93. 93. 93. 93. 93. 93. 93. 93. 93. 93.
432 – 447	93. 93. 93. 93. 93. 93. 93. 93. 93. 93. 93. 93. 93. 93. 93. 93.
448 – 463	93. 93. 93. 93. 93. 93. 93. 93. 93. 93. 93. 93. 93. 93. 93. 93.
464 – 479	93. 93. 93. 93. 93. 93. 93. 93. 93. 93. 93. 93. 93. 93. 93. 93.
480 – 495	93. 93. 93. 93. 93. 93. 93. 93. 93. 93. 93. 93. 93. 93. 93. 93.
496 – 511	93. 93. 93. 93. 93. 93. 93. 93. 93. 93. 93. 93. 93. 93. 93. 93.
512 – 527	7F. 7F. 7F. 7F. 7F. 78. 68. E8. D9. D1. 15. 15. 10. 10. 0A. 0A.
528 – 543	0A. 08. 07. 06. 05. 05. 05. 05. 05. 05. 04. 04. 04. 04. 04. 04.
544 – 559	83. 83. 83. 83. 83. 83. 83. 83. 83. 83. 83. 83. 83. 83. 83. 83.
560 – 575	83. 83. 83. 83. 83. 83. 83. 83. 83. 83. 83. 83. 83. 83. 83. 83.
576 – 591	80. 80. 80. 80. 80. 80. 80. 80. 80. 80. 80. 80. 80. 80. 80. 80.
592 – 607	80. 80. 80. 80. 80. 80. 80. 80. 80. 80. 80. 80. 80. 80. 80. 80.
608 – 623	80. 80. 80. 80. 80. 80. 80. 80. 80. 80. 80. 80. 80. 80. 80. 80.
624 – 639	80. 80. 80. 80. 80. 80. 80. 80. 80. 80. 80. 80. 80. 80. 80. 80.
640 – 655	80. 80. 80. 80. 80. 80. 80. 80. 80. 80. 80. 80. 80. 80. 80. 80.
656 – 671	80. 80. 80. 80. 80. 80. 80. 80. 80. 80. 80. 80. 80. 80. 80. 80.
672 – 687	80. 80. 80. 80. 80. 80. 80. 80. 80. 80. 80. 80. 80. 80. 80. 80.
688 – 703	80. 80. 80. 80. 80. 80. 80. 80. 80. 80. 80. 80. 80. 80. 80. 80.
704 – 719	80. 80. 80. 80. 80. 80. 80. 80. 80. 80. 80. 80. 80. 80. 80. 80.
720 – 735	80. 80. 80. 80. 80. 80. 80. 80. 80. 80. 80. 80. 80. 80. 80. 80.
736 – 751	80. 80. 80. 80. 80. 80. 80. 80. 80. 80. 80. 80. 80. 80. 80. 80.
752 – 767	80. 80. 80. 80. 80. 80. 80. 80. 80. 80. 80. 80. 80. 80. 80. 80.
768 – 783	7F. 7F. 7F. 7F. 7D. 69. 5E. DE. D9. D1. 10. 10. 0A. 0A. 07. 07.
784 – 799	07. 05. 05. 05. 03. 03. 03. 03. 02. 02. 02. 02. 02. 02. 02. 02.
800 – 815	81. 81. 81. 81. 81. 81. 81. 81. 81. 81. 81. 81. 81. 81. 81. 81.
816 – 831	81. 81. 81. 81. 81. 81. 81. 81. 81. 81. 81. 81. 81. 81. 81. 81.
832 – 847	80. 80. 80. 80. 80. 80. 80. 80. 80. 80. 80. 80. 80. 80. 80. 80.
848 – 863	80. 80. 80. 80. 80. 80. 80. 80. 80. 80. 80. 80. 80. 80. 80. 80.
864 – 879	80. 80. 80. 80. 80. 80. 80. 80. 80. 80. 80. 80. 80. 80. 80. 80.
880 – 895	80. 80. 80. 80. 80. 80. 80. 80. 80. 80. 80. 80. 80. 80. 80. 80.
896 – 911	80. 80. 80. 80. 80. 80. 80. 80. 80. 80. 80. 80. 80. 80. 80. 80.
912 – 927	80. 80. 80. 80. 80. 80. 80. 80. 80. 80. 80. 80. 80. 80. 80. 80.
928 – 943	80. 80. 80. 80. 80. 80. 80. 80. 80. 80. 80. 80. 80. 80. 80. 80.
944 – 959	80. 80. 80. 80. 80. 80. 80. 80. 80. 80. 80. 80. 80. 80. 80. 80.
960 – 975	80. 80. 80. 80. 80. 80. 80. 80. 80. 80. 80. 80. 80. 80. 80. 80.
976 – 991	80. 80. 80. 80. 80. 80. 80. 80. 80. 80. 80. 80. 80. 80. 80. 80.
992 – 1007	80. 80. 80. 80. 80. 80. 80. 80. 80. 80. 80. 80. 80. 80. 80. 80.
1008 – 1023	80. 80. 80. 80. 80. 80. 80. 80. 80. 80. 80. 80. 80. 80. 80. 80.

BVH-1100A

SECTION 23
SPARE PARTS AND TEST FIXTURE

PARTS INFORMATION

1. **Safety Related Component Warning**

   Components identified by shading on the schematic diagrams, exploded views and electrical spare parts list are critical to safe operation. Replace these components with Sony parts whose part numbers appear as shown in this manual or in service bulletins and service manual supplements published by Sony.

2. Replace Parts that are supplied from Sony Parts Center can sometimes have different shape and external appearance than what are actually used in equipment. This is due to **"accomodating the improved parts and/or engineering changes"** or **"standardization of genuine parts"**.

   - This manual's exploded views and electrical spare parts list are indicating the parts numbers of "the standardized genuine parts at present".
   - Regarding engineering parts changes in our engineering dapartment, refer Sony service bulletins and service manual supplements.

3. **Printed Components in Bold-Face type** on the exploded views and electrical spare parts list are normally stocked for replacement purposes. The remaining parts are not normally required for routine service work. Orders for parts not shown in Bold-Face type will be processed, but allow for additional delivery time.

4. Item with no part number and/or no description are not stocked because they are seldom required for routine service.

5. The exploded views and parts lists show the applicable model name after PARTS NO.
   Take care when ordering parts.
   Moreover, even after all the component, that have a specific model name to be applied, were replaced, one model cannot be modified to another model because non-serviceable parts such as harness are different depending on each model.

6. (T) after the description of spring shown on the part list means the number of a spring turn required for the use. (For example, Spring, tension (24T); This spring must be cut at its 24th turn for actual use.)

7. Screws
   - All the screws used in this machine are the TOTSU type unless otherwise noted. The screws are interchangeable with the Phillips type (⊕) and slotted type (⊖) screws.
   - Please order as the following part number when ordering the TOTSU type screws.

Size	screw and washer assembly PS	screw, spring washer and flat washer assembly PSW	binding head screw 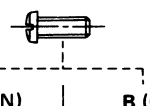 B (BZnN)	B (Cr-N)	TOTSU head tap-tite screw 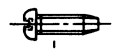 PTT	TOTSU flanged head screw 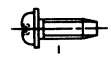 PTTWH
2.6 x 4	7-621-972-05	———	7-621-912-10	7-621-912-18	———	———
2.6 x 6	7-621-972-25	———	7-621-912-30	7-621-912-38	———	———
2.6 x 8	7-621-972-35	———	7-621-912-40	7-621-912-48	———	———
2.6 x 10	7-621-972-45	———	7-621-912-50	7-621-912-58	———	———
2.6 x 12	7-621-972-55	———	7-621-912-60	7-621-912-68	———	———
3 x 6	7-686-447-01	7-686-527-01	7-686-624-09	7-686-624-04	7-687-411-31	7-687-510-31
3 x 8	7-686-448-01	7-686-528-01	7-686-625-09	7-686-625-04	7-687-412-31	7-687-511-31
3 x 10	7-686-449-01	7-686-529-01	7-686-626-09	7-686-626-04	7-687-413-31	7-687-512-31
3 x 12	7-686-450-01	7-686-530-01	7-686-627-09	7-686-627-04	———	———
3 x 16	7-686-452-01	7-686-532-01	7-686-629-09	7-686-629-04	———	———
3 x 25	7-686-454-01	7-686-534-01	7-686-631-09	7-686-631-04	———	———
4 x 8	7-686-468-01	———	———	7-686-635-04	———	———
4 x 12	7-686-470-01	———	———	7-686-637-04	———	———
4 x 14	7-686-471-01	———	———	7-686-638-04	———	———
4 x 16	7-686-472-01	———	———	7-686-639-04	———	———
4 x 20	7-686-473-01	———	———	7-686-640-04	———	———

8. Other screws, washers, nuts and stop-rings used in this machine.
   - Please order as the following part number if required.

Size	countersunk head screw 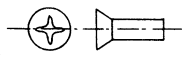 K	oval countersunk head screw 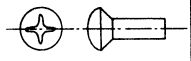 RK	hexagon socket head cap screw 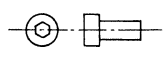 C	set screw 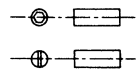
2 x 4	—	—	—	7-621-710-36
2 x 6	7-621-555-42	—	—	—
2 x 10	—	7-621-661-28	—	—
2 x 12	—	7-621-661-38	—	—
2 x 14	—	7-621-661-48	—	—
2.6 x 5	7-621-559-30	—	—	—
2.6 x 6	7-621-592-00	7-621-662-28	—	—
2.6 x 8	7-621-592-10	—	—	—
3 x 4	—	—	—	3-701-506-01
3 x 5	7-682-246-09	—	—	—
3 x 6	7-682-247-09	7-682-347-09	—	3-701-508-01
3 x 8	7-682-248-09	—	7-683-404-04	3-701-509-01
3 x 10	—	—	7-683-405-04	—
3 x 14	—	7-682-351-04	—	—
3 x 25	—	7-682-354-04	—	—
4 x 6	—	—	—	3-701-511-01
4 x 8	7-682-261-09	—	—	—
4 x 10	7-682-262-09	—	—	—
5 x 6	—	—	—	3-701-514-01
5 x 16	—	—	7-683-438-04	—
5 x 20	—	—	7-683-440-04	—
5 x 25	—	—	7-683-442-04	—
6 x 12	—	7-682-388-04	—	—
6 x 16	—	—	7-683-455-04	—

nominal diameter	hexagon nut 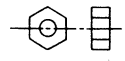
N3	7-684-023-04
N4	7-684-024-04

nominal diameter	stop ring type E
2.0	7-624-104-04
2.3	7-624-105-04
3.0	7-624-106-04
4.0	7-624-108-04
5.0	7-624-109-04
6.0	7-624-110-04

nominal diameter	fiber washer 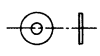	polyslider washer 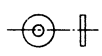	flat washer small 	flat washer middle 	spring washer 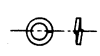	toothed washer type A 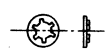	toothed washer type B 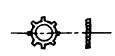
2.6	7-623-953-11	—	7-688-002-01	—	7-623-207-22	—	—
3	7-623-954-01	3-701-439-11	7-688-003-01	7-688-003-12	7-623-208-22	—	7-623-422-07
4	—	—	7-688-004-02	7-688-004-12	7-623-210-22	—	7-623-423-07
5	—	—	7-688-005-01		7-623-212-22	—	—
6	—	3-701-444-21	—	7-688-006-11	7-623-213-22	—	—
8	—	3-701-446-11	—	—	—	—	—
10	—	3-701-447-21	—	—	—	7-623-315-01	—

TAPE TRANSPORT FRONT PANEL ASSEMBLY

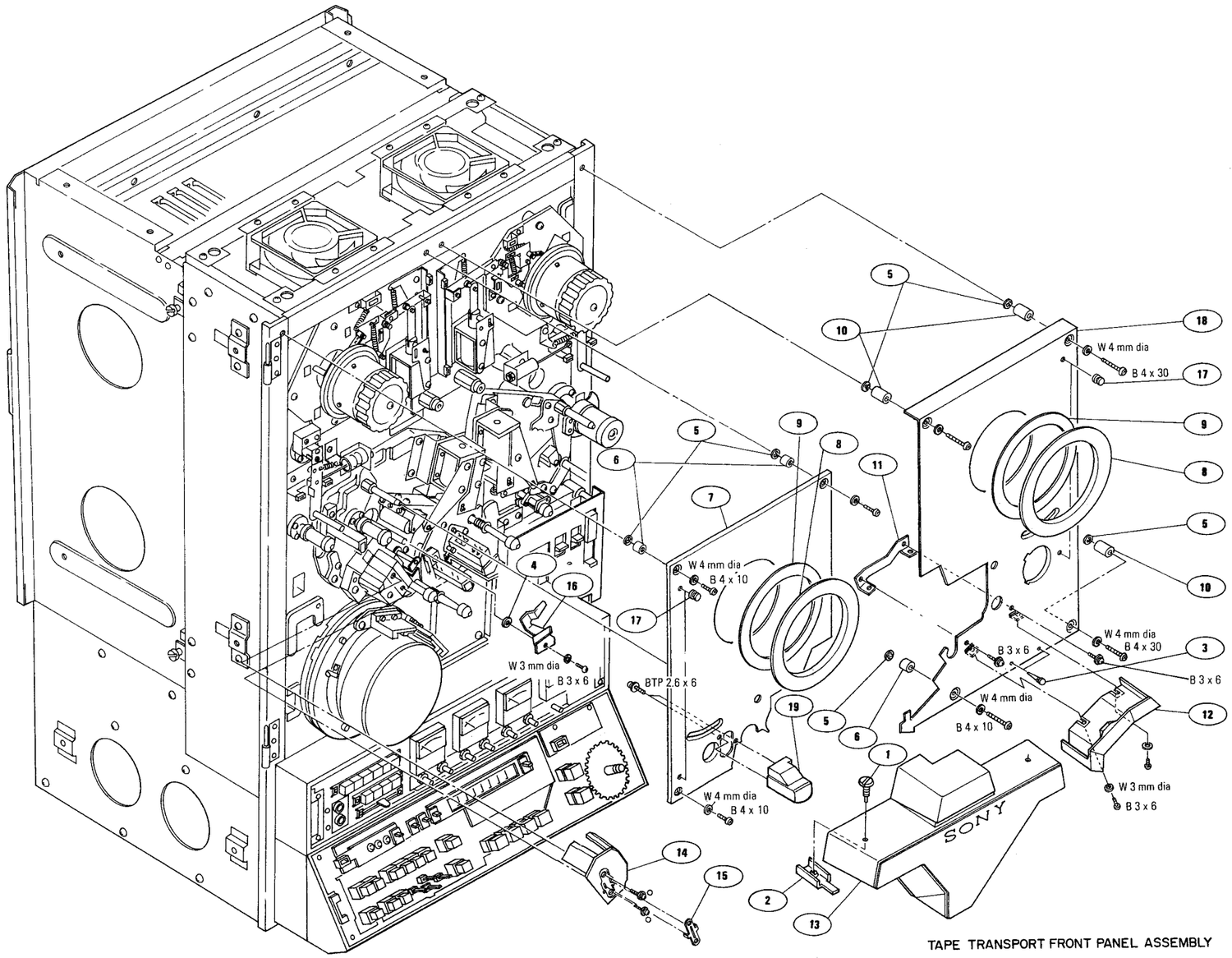

TAPE TRANSPORT FRONT PANEL ASSEMBLY

No.	Part No.	Description
1	3-621-050-00	SCREW
2	3-643-317-00	HOLDER, HEAD COVER
3	3-644-002-00	CUSHION, HANDLE
4	3-650-154-00	STOP WASHER, 3MM DIA
5	3-650-537-00	WASHER, 4MM DIA
6	3-651-692-00	SPACER (A), STOP WASHER
7	3-651-693-00	PANEL, S REEL
8	3-651-694-00	PLATE, ORNAMENTAL REEL PANEL
9	3-651-695-00	ADHESIVE PAPER, ORNAMENTAL PLATE
10	3-651-698-00	SPACER (C), STOP WASHER
11	3-651-699-00	BRACKET, TAPE GUIDE
12	3-651-701-03	COVER, TG
13	3-651-702-05	COVER, PINCH ROLLER
14	3-651-704-04	COVER, TENSION
15	3-651-705-00	PROTECTOR, SCREW
16	3-651-712-02	GUIDE PANEL (A)
17	3-651-753-00	BUSHING, RUBBER
18	3-654-819-03	REEL PANEL, T
19	3-660-201-00	COVER, ERASE HEAD

NOTE:

1. Parts printed in Bold-Face type are normally stocked for replacement purposes. The remaining parts shown in this manual are not normally required for routine service work. Orders for parts not shown in Bold-Face type will be processed, but allow for additional delivery time.
2. Item with no part number and/or no description are not stocked because they are seldom required for routine service.
3. ●; PSW3x6 (Pan head screw with spring washer and flat washer)
   ○; PSW3x8 (Pan head screw with spring washer and flat washer)

RACK COVER ASSEMBLY

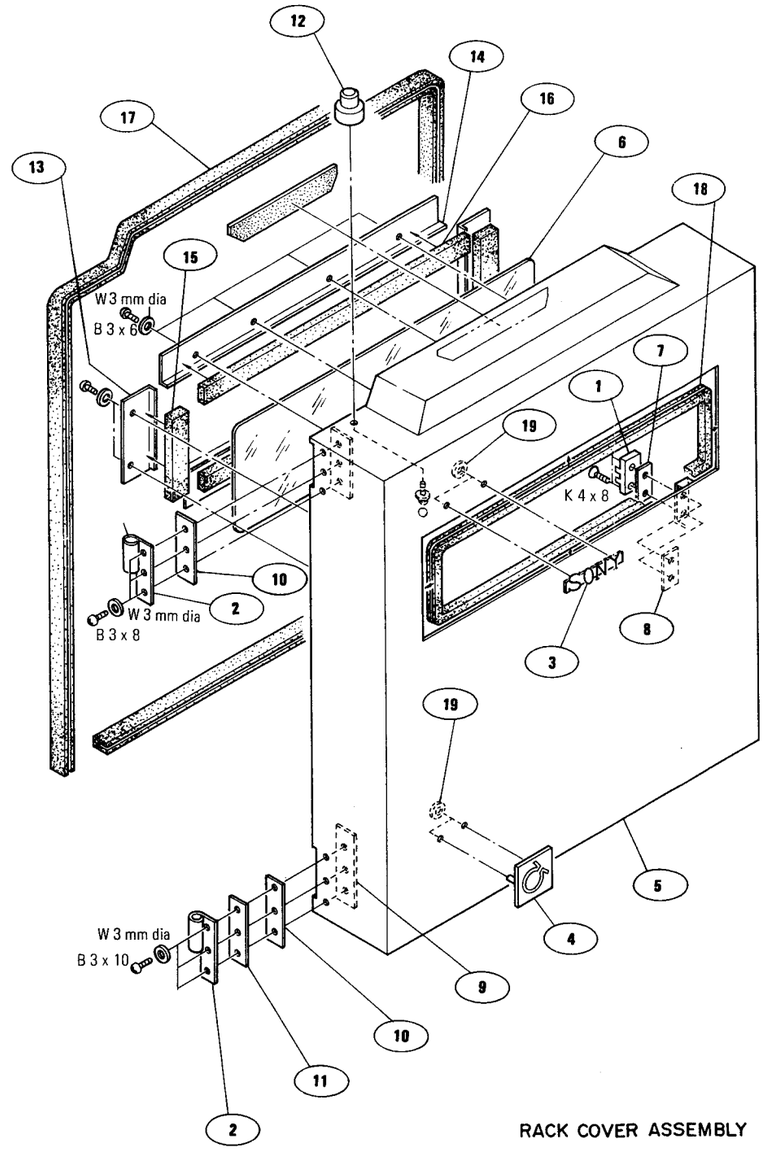

RACK COVER ASSEMBLY

No.	Part No.	Description
1	3-638-650-00	CATCH
2	3-651-652-00	HINGE (B)
3	**3-651-703-00**	**EMBLEM, SONY**
4	**3-651-724-00**	**EMBLEM, OMEGA**
5	3-651-732-00	COVER, RACK
6	3-651-733-00	GLASS, ORNAMENTAL
7	3-651-735-00	SPACER, CATCH
8	3-651-736-00	PLATE NUT, CATCH
9	3-651-737-00	PLATE NUT, HINGE
10	3-651-738-00	SPACER (1), HINGE
11	3-651-739-00	SPACER (2), HINGE
12	3-651-740-00	PIN, STOPPER
13	3-651-741-00	RETAINER (1), GLASS
14	3-651-742-00	RETAINER (2), GLASS
15	3-651-743-00	CUSHION (1), GLASS
16	3-651-744-00	CUSHION (2), GLASS
17	3-651-745-00	EDGING (1), RUBBER
18	3-651-746-00	EDGING (2), RUBBER
19	**7-624-200-11**	**PUSH NUT 2MM DIA**

NOTE:

1. Parts printed in Bold-Face type are normally stocked for replacement purposes. The remaining parts shown in this manual are not normally required for routine service work. Orders for parts not shown in Bold-Face type will be processed, but allow for additional delivery time.
2. Item with no part number and/or no description are not stocked because they are seldom required for routine service.
3. ●; PSW3x6 (Pan head screw with spring washer and flat washer)
   ○; PSW3x8 (Pan head screw with spring washer and flat washer)

TAPE TRANSPORT SIDE PANEL ASSEMBLY

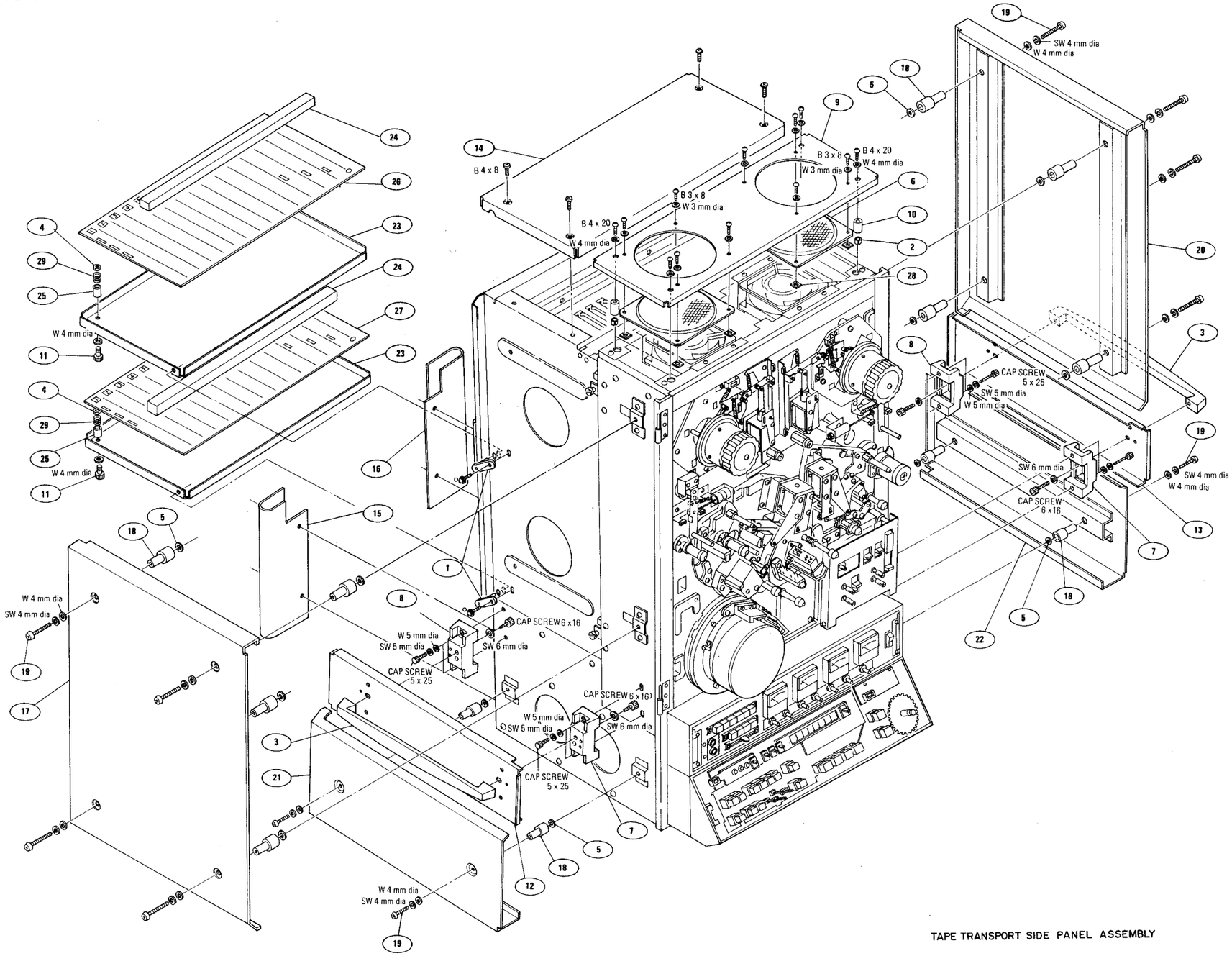

TAPE TRANSPORT SIDE PANEL ASSEMBLY

No.	Part No.	Description
1	X-3651-334-0	SHAFT ASS'Y, REAR COVER
2	3-621-918-00	BUSHING, STOPPER
3	3-638-281-00	HANDLE
4	3-648-057-00	NUT, U
5	3-650-537-00	WASHER, 4MM DIA
6	3-651-486-00	COVER, FAN
7	3-651-578-02	BLOCK (FRONT), HANDLE
8	3-651-579-00	BLOCK (REAR), HANDLE
9	3-651-580-00	ORNAMENTAL PANEL, FAN
10	3-651-581-00	SPACER, COVER
11	3-651-600-00	SCREW, COVER
12	3-651-654-00	ORNAMENTAL PANEL (L), HANDLE
13	3-651-655-00	ORNAMENTAL PANEL (R), HANDLE
14	3-651-656-00	ORNAMENTAL PANEL, AMP CHASSIS
15	3-651-657-00	GUARD (L), CONNECTOR
16	3-651-658-00	GUARD (R), CONNECTOR
17	3-651-706-00	SIDE COVER (L), UPPER
18	3-651-707-00	SPACER, SIDE COVER
19	**3-651-708-00**	**SCREW B4x50**
20	3-651-709-00	SIDE COVER (R), UPPER
21	3-651-710-00	SIDE COVER (L), LOWER
22	3-651-711-00	SIDE COVER (R), LOWER
23	3-651-716-00	PANEL, REAR
24	3-651-719-00	CUSHION, PWB
25	3-651-849-00	SPACER, COVER
26	3-659-249-00	NAMEPLATE, CIRCUIT BOARD (UPPER) (FOR NTSC)
	3-659-266-00	NAMEPLATE, CIRCUIT BOARD (UPPER) (FOR PS)
27	3-659-250-00	NAMEPLATE, CIRCUIT BOARD (LOWER) (FOR NTSC)
	3-659-267-00	NAMEPLATE, CIRCUIT BOARD (LOWER) (FOR PS)
28	**3-819-519-00**	**NUT**
29	4-823-115-00	SPRING, COMPRESSION

NOTE:

1. Parts printed in Bold-Face type are normally stocked for replacement purposes. The remaining parts shown in this manual are not normally required for routine service work. Orders for parts not shown in Bold-Face type will be processed, but allow for additional delivery time.
2. Item with no part number and/or no description are not stocked because they are seldom required for routine service.
3. ●; PSW3x6 (Pan head screw with spring washer and flat washer)
   ○; PSW3x8 (Pan head screw with spring washer and flat washer)

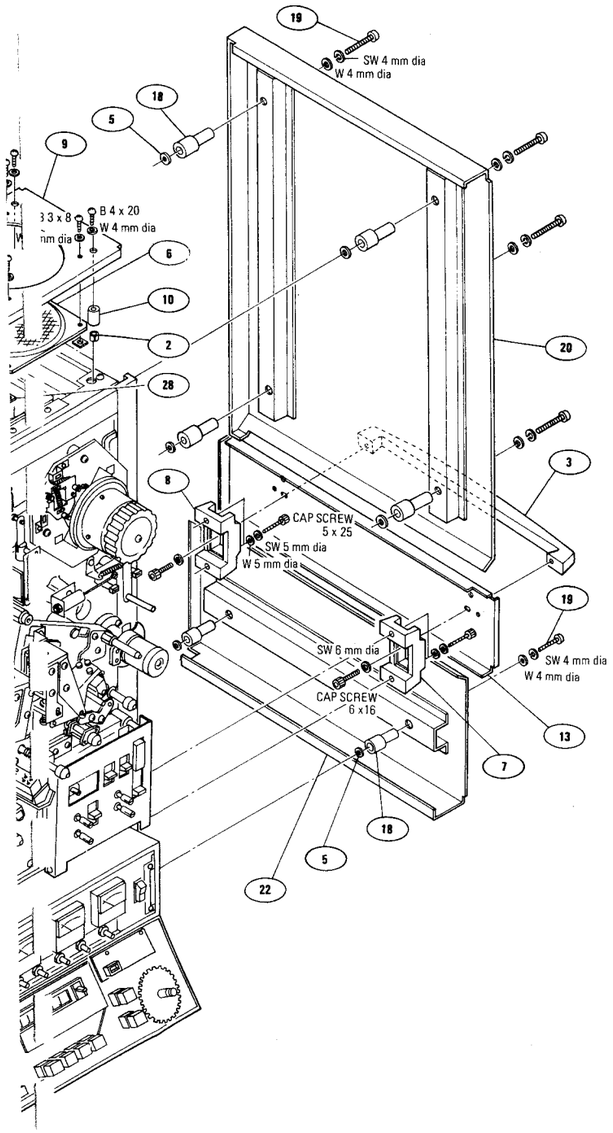

TAPE TRANSPORT SIDE PANEL ASSEMBLY

No.	Part No.	Description
1	X-3651-334-0	SHAFT ASS'Y, REAR COVER
2	3-621-918-00	BUSHING, STOPPER
3	3-638-281-00	HANDLE
4	3-648-057-00	NUT, U
5	3-650-537-00	WASHER, 4MM DIA
6	3-651-486-00	COVER, FAN
7	3-651-578-02	BLOCK (FRONT), HANDLE
8	3-651-579-00	BLOCK (REAR), HANDLE
9	3-651-580-00	ORNAMENTAL PANEL, FAN
10	3-651-581-00	SPACER, COVER
11	3-651-600-00	SCREW, COVER
12	3-651-654-00	ORNAMENTAL PANEL (L), HANDLE
13	3-651-655-00	ORNAMENTAL PANEL (R), HANDLE
14	3-651-656-00	ORNAMENTAL PANEL, AMP CHASSIS
15	3-651-657-00	GUARD (L), CONNECTOR
16	3-651-658-00	GUARD (R), CONNECTOR
17	3-651-706-00	SIDE COVER (L), UPPER
18	3-651-707-00	SPACER, SIDE COVER
19	**3-651-708-00**	**SCREW B4x50**
20	3-651-709-00	SIDE COVER (R), UPPER
21	3-651-710-00	SIDE COVER (L), LOWER
22	3-651-711-00	SIDE COVER (R), LOWER
23	3-651-716-00	PANEL, REAR
24	3-651-719-00	CUSHION, PWB
25	3-651-849-00	SPACER, COVER
26	3-659-249-00	NAMEPLATE, CIRCUIT BOARD (UPPER) (FOR NTSC)
	3-659-266-00	NAMEPLATE, CIRCUIT BOARD (UPPER) (FOR PS)
27	3-659-250-00	NAMEPLATE, CIRCUIT BOARD (LOWER) (FOR NTSC)
	3-659-267-00	NAMEPLATE, CIRCUIT BOARD (LOWER) (FOR PS)
28	**3-819-519-00**	**NUT**
29	4-823-115-00	SPRING, COMPRESSION

NOTE:

1. Parts printed in Bold-Face type are normally stocked for replacement purposes. The remaining parts shown in this manual are not normally required for routine service work. Orders for parts not shown in Bold-Face type will be processed, but allow for additional delivery time.
2. Item with no part number and/or no description are not stocked because they are seldom required for routine service.
3. ● ; PSW3x6 (Pan head screw with spring washer and flat washer)
   ○ ; PSW3x8 (Pan head screw with spring washer and flat washer)

CONTROL PANEL ASSEMBLY

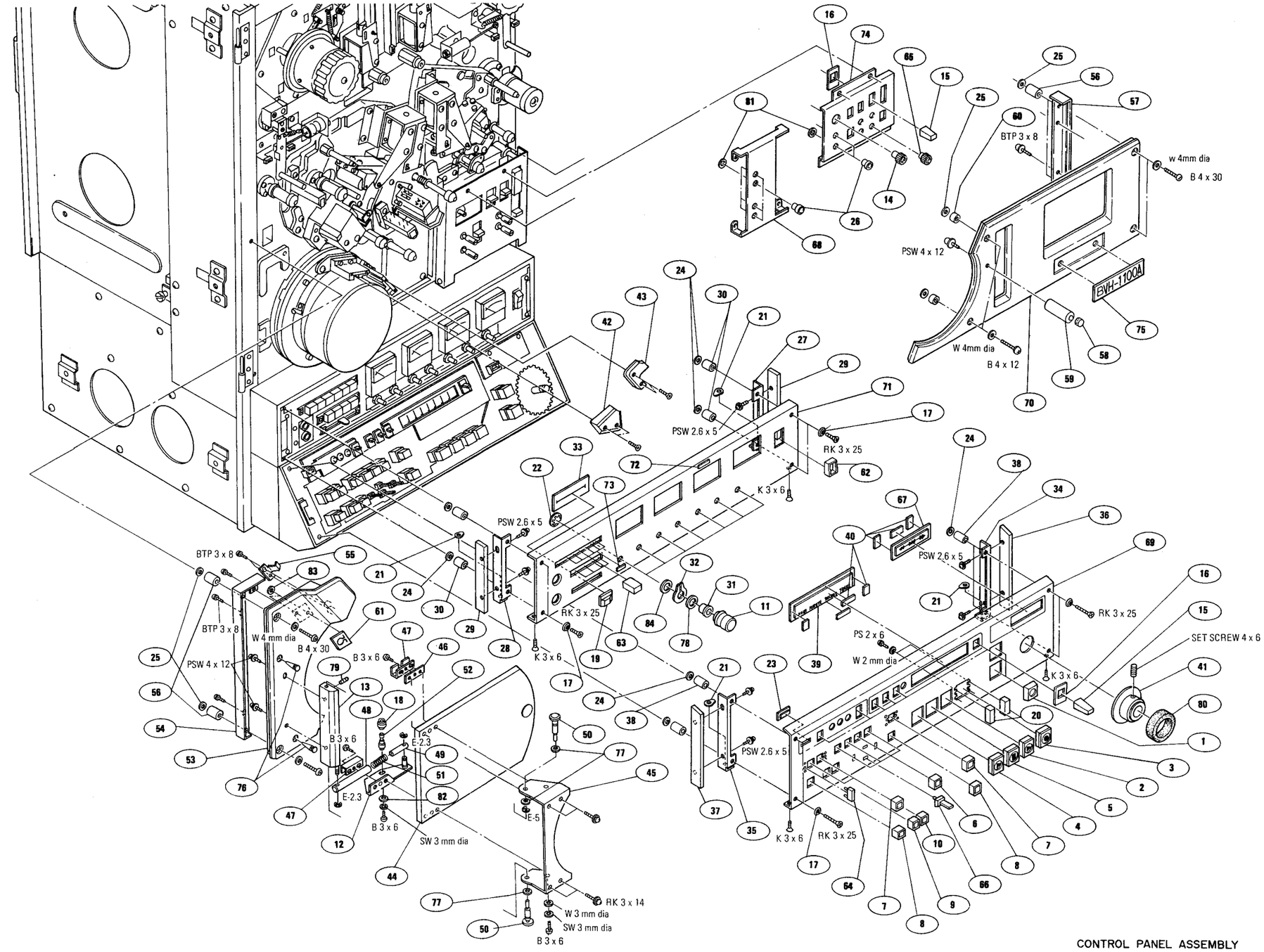

CONTROL PANEL ASSEMBLY

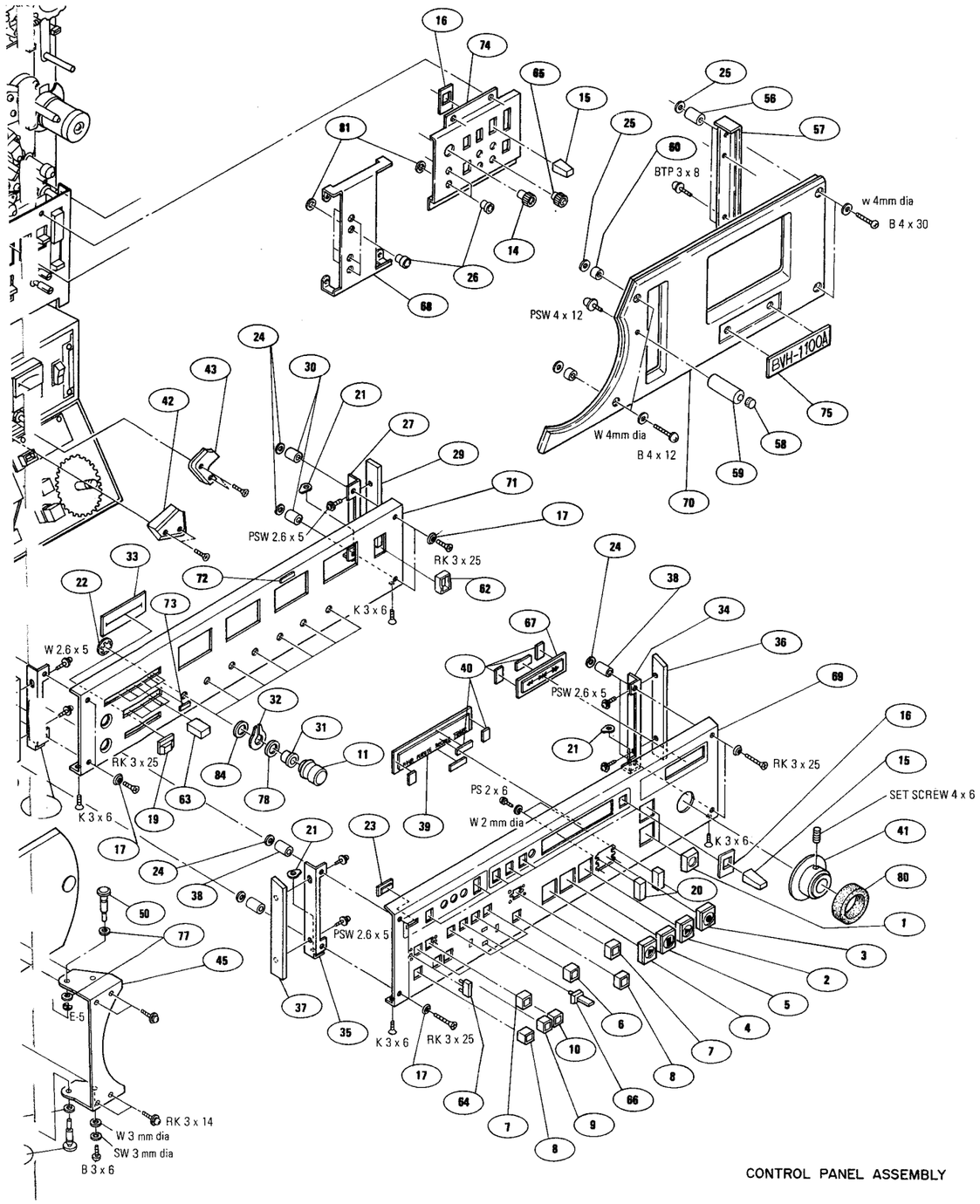

CONTROL PANEL ASSEMBLY

No.	Parts No.	Description
56	3-651-676-00	SPACER, DRUM PANEL
57	3-651-686-00	SIDE PLATE (T), DRUM PANEL
58	3-651-687-00	RUBBER, DRUM COVER
59	3-651-688-00	RETAINER, DRUM COVER
60	3-651-692-00	SPACER (A), STOP WASHER
61	**3-651-724-00**	**EMBLEM, OMEGA**
62	**3-651-850-00**	**GUARD, AC SWITCH**
63	**3-651-946-00**	**KNOB, PUSH BUTTON**
64	3-657-986-00	GUARD, REC
65	**3-657-991-00**	**KNOB, CONTROL**
66	3-659-224-00	KNOB, TRIMMING SWITCH
67	**3-659-232-00**	**WINDOW**
68	3-659-241-00	PANEL, RF SW
69	3-659-257-00	ORNAMENTAL PANEL, F
70	3-659-259-00	DRUM PANEL
71	3-659-260-00	ORNAMENTAL PANEL, L
72	3-659-271-00	LABEL (1), A4
73	3-659-272-00	LABEL (2), A4
74	3-659-284-00	ORNAMENTAL PLATE, SUB PANEL
75	3-660-231-00	LABEL, MODEL NUMBER (FOR USE/CND/J)
	3-660-232-00	LABEL, MODEL NUMBER (FOR PS)
	3-660-233-00	LABEL, MODEL NUMBER (FOR PM)
76	**3-701-188-XX**	**FOOT, RUBER**
77	3-701-444-21	WASHER, 6MM DIA (T=0.5)
78	3-701-447-21	WASHER, 10MM DIA (T=0.5)
79	3-701-506-00	SET SCREW, 3x4
80	**3-880-553-00**	**RUBBER, SW DIAL KNOB**
81	4-312-164-00	STOP RING 8MM DIA
82	4-804-919-00	SPACER, TERMINAL
83	**7-624-200-11**	**PUSH NUT 2**
84	**9-911-850-XX**	**FELT, KNOB**

NOTE:

1. Parts printed in Bold-Face type are normally stocked for replacement purposes. The remaining parts shown in this manual are not normally required for routine service work. Orders for parts not shown in Bold-Face type will be processed, but allow for additional delivery time.
2. Item with no part number and/or no description are not stocked because they are seldom required for routine service.
3. ●; PSW3x6 (Pan head screw with spring washer and flat washer)
   ○; PSW3x8 (Pan head screw with spring washer and flat washer)

No.	Part No.	Description
1	**A-6005-001-A**	**BUTTON ASS'Y, WHITE**
2	**A-6005-002-A**	**BUTTON ASS'Y, PLAY**
3	**A-6005-004-A**	**BUTTON ASS'Y, RECORD**
4	**A-6005-005-A**	**BUTTON ASS'Y, YELLOW**
5	**A-6005-006-A**	**BUTTON ASS'Y, STOP**
6	**A-6005-012-A**	**BUTTON (2) ASS'Y, WHITE**
7	**A-6005-013-A**	**BUTTON (2) ASS'Y, RED**
8	**A-6005-014-A**	**BUTTON (2) ASS'Y, BLUE**
9	**A-6005-015-A**	**BUTTON ASS'Y, IN**
10	**A-6005-016-A**	**BUTTON ASS'Y, OUT**
11	**X-3651-342-0**	**KNOB ASS'Y, VOL**
12	X-3651-343-0	SIDE PANEL ASS'Y, DRUM COVER
13	X-3651-344-0	GUARD BLOCK ASS'Y
14	**X-3651-347-0**	**KNOB ASS'Y**
15	**2-252-620-00**	**KNOB, LEVER SWITCH**
16	2-252-623-00	PLATE, SWITCH LEVER
17	3-451-111-00	ORNAMENT, SCREW
18	3-534-255-00	CUSHION, BRAKE
19	**3-536-814-00**	**KNOB, SLIDE VOL**
20	3-539-823-00	GUARD
21	3-630-411-00	NUT, PLATE
22	3-638-192-00	STOP RING, CS TYPE
23	**3-642-012-00**	**COVER, LAMP**
24	3-650-154-00	STOP WASHER, 3MM DIA
25	3-650-537-00	WASHER, 4MM DIA
26	3-651-450-00	ESCUTCHEON, VOLUME
27	3-651-624-00	BRACKET, SIDE (LR)
28	3-651-625-00	BRACKET, SIDE (LL)
29	3-651-626-02	ORNAMENTAL PLATE (L), SIDE
30	3-651-627-00	SUPPORT, L PANEL
31	3-651-628-00	SHAFT, INDICATING PLATE
32	3-651-629-00	INDICATOR, CONTROL
33	3-651-630-00	MASK, SVR
34	3-651-632-00	BRACKET (FR), SIDE
35	3-651-633-00	BRACKET (FL), SIDE
36	3-651-634-02	ORNAMENTAL PLATE (FR), SIDE
37	3-651-635-02	ORNAMENTAL (FL), SIDE
38	3-651-636-00	SUPPORT, F PANEL
39	**3-651-637-00**	**WINDOW, TIMER**
40	3-651-638-00	CUSHION, TIMER WINDOW
41	3-651-640-00	WHEEL
42	3-651-660-00	COVER, S SLANT GUIDE
43	3-651-661-02	COVER, T SLANT GUIDE
44	3-651-664-00	COVER, DRUM
45	3-651-665-00	ORNAMENTAL PANEL, DRUM COVER
46	3-651-666-00	NUT
47	3-651-667-00	ORNAMENTAL PANEL, SCREW
48	3-651-668-00	PIPE, STRUT
49	3-651-669-00	SHAFT, STRUT
50	3-651-670-00	SHAFT, DRUM COVER
51	3-651-671-00	SPRING, COMPRESSION
52	3-651-672-00	SHAFT, STOPPER
53	3-651-673-02	DRUM PANEL S
54	3-651-674-00	SIDE BRACKET S, DRUM PANEL
55	3-651-675-00	SPRING, DRUM PANEL (L)

LEVEL CONTROL ASSEMBLY

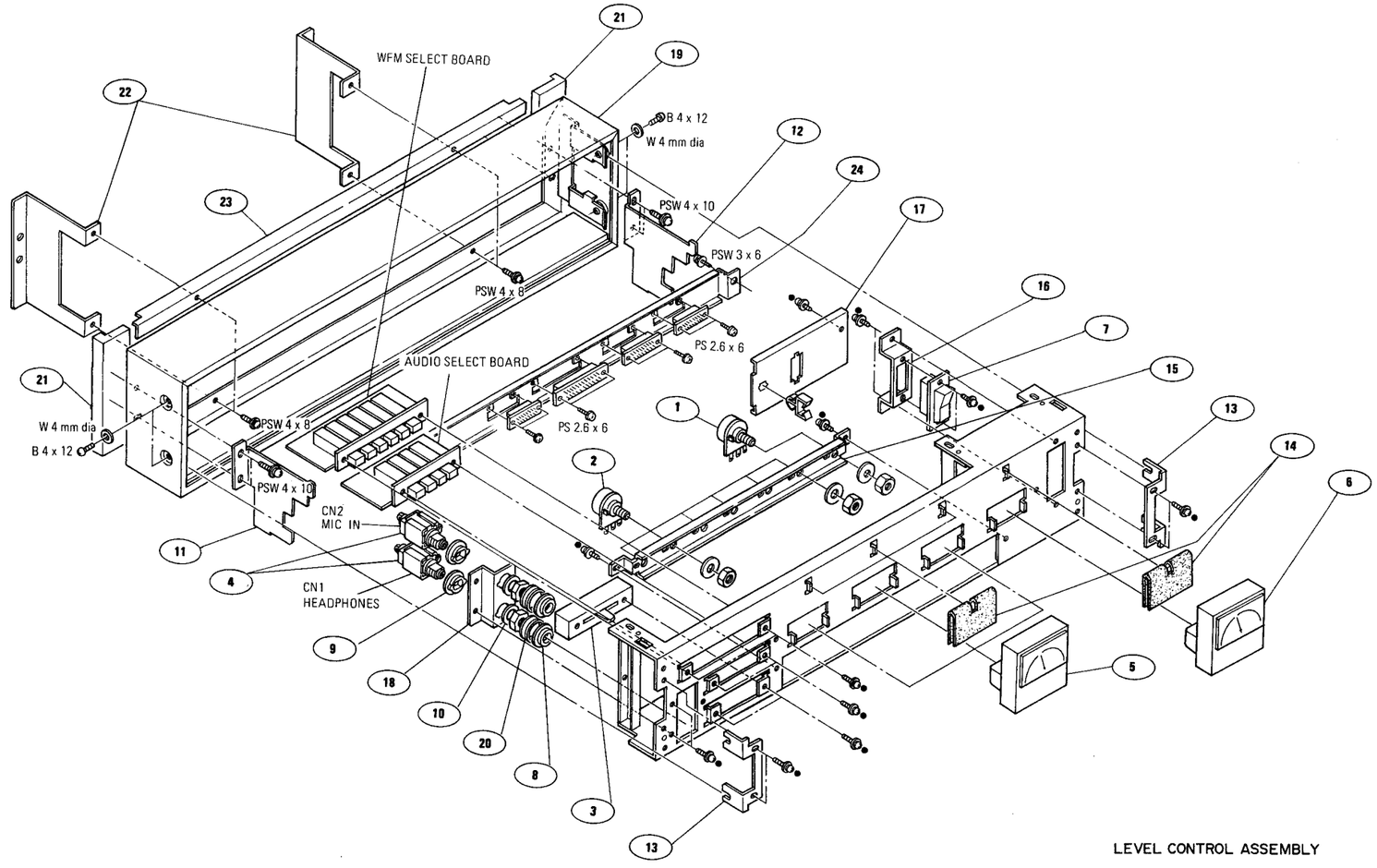

LEVEL CONTROL ASSEMBLY

No.	Part No.	Description
1	**1-224-584-00**	**VAR, CARBON, 10K**
2	**1-224-690-XX**	**VAR, CARBON, 5K**
3	**1-224-959-00**	**VAR, SLIDE**
4	**1-507-477-XX**	**JACK, JM-60**
5	**1-520-288-00**	**METER (FOR PS, PM)**
	1-520-401-00	**METER (FOR NTSC)**
6	**1-520-289-00**	**METER, VOLUM UNIT**
⚠**7**	**1-552-060-00**	**SWITCH, POWER**
8	**3-451-021-00**	**INSULATOR (C), JACK**
9	**3-451-107-00**	**INSULATOR (B), JACK**
10	**3-451-128-00**	**INSULATING SHEET, JACK**
11	3-651-547-00	BRACKET (L), LOCK
12	3-651-549-00	BRACKET (R), LOCK
13	3-651-553-00	BRACKET (B), PANEL
14	3-651-554-00	CUSHION, METER
15	3-651-555-00	BRACKET, VOLUME CONTROL
16	3-651-556-00	BRACKET, POWER SW
17	3-651-557-00	BRACKET, PS CONNECTOR
18	3-651-558-00	BRACKET, JACK
19	3-651-589-02	TABLE, L PANEL
20	3-651-642-00	HOLDER, JACK
21	3-651-788-00	SASH (F)
22	3-651-789-00	BRACKET (L), RACK
23	3-651-790-02	PANEL (L) ORNAMENTAL
24	3-651-792-02	BRACKET (L), CONNECTOR

NOTE:

1. **The shaded and ⚠ -marked components are critical to safety. Replace only with same components as specified.**
2. Parts printed in Bold-Face type are normally stocked for replacement purnoses. The remaining parts shown in this manual are not normally required for routine service work. Orders for parts not shown in Bold-Face type will be processed, but allow for additional delivery time.
3. Item with no part number and/or no description are not stocked because they are seldom required for routine service.
4. ●; PSW3x6 (Pan head screw with spring washer and flat washer)
   ○; PSW3x8 (Pan head screw with spring washer and flat washer)

FUNCTION CONTROL ASSEMBLY

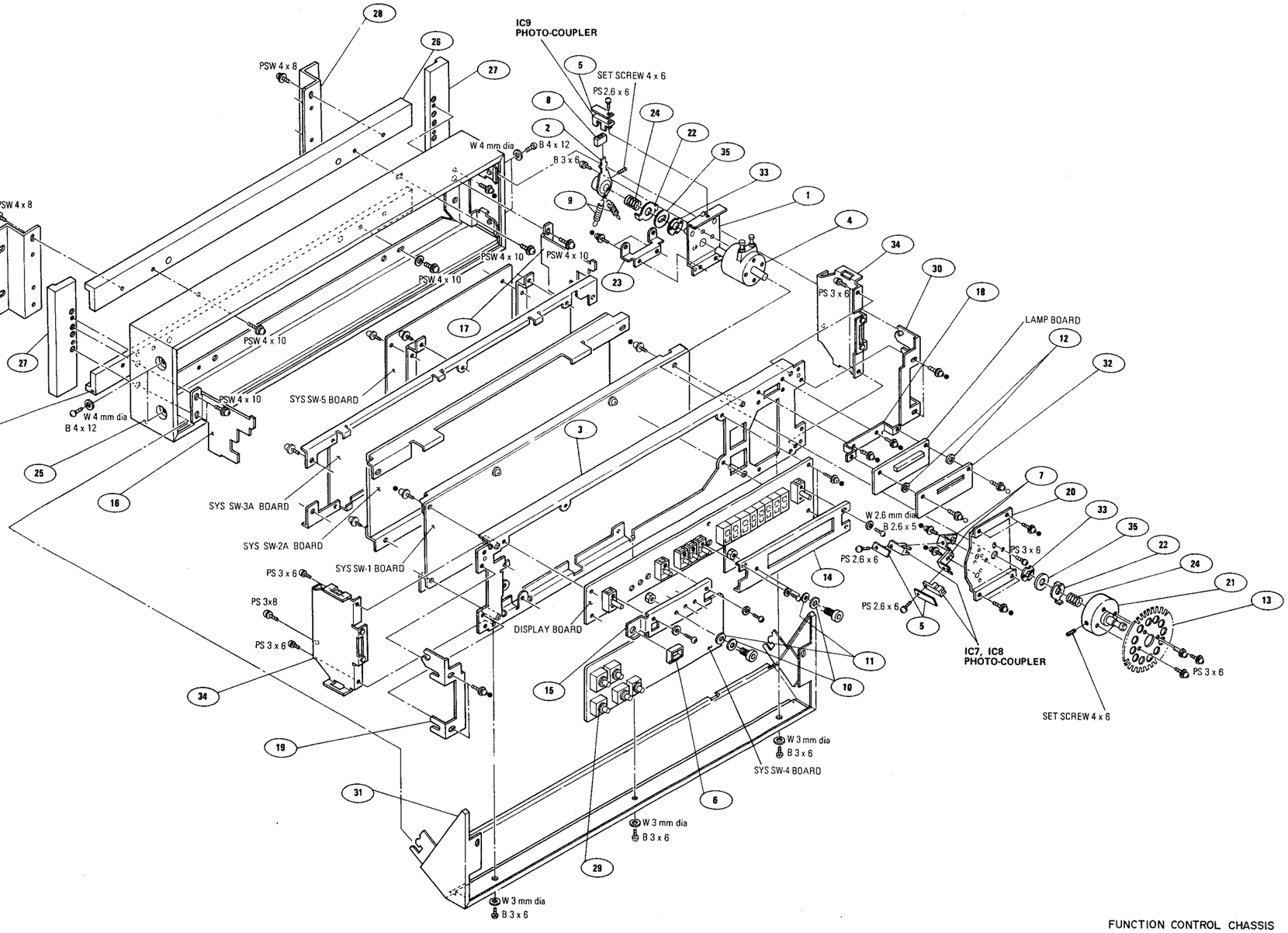

FUNCTION CONTROL CHASSIS

No.	Part No.	Description
1	X-3651-339-0	BASE ASS'Y, RESET BRACKET
2	X-3651-340-0	RESET BRACKET ASS'Y
3	X-3659-206-0	CHASSIS ASS'Y, FUNCTION PANEL
4	**1-454-161-00**	**MAGNETIC CLUTCH**
5	1-603-024-00	SE-1, BOARD
6	2-234-431-00	RUBBER, LAMP SHIELD
7	2-251-619-00	BRACKET (N), PHOTOCOUPLER
8	3-483-026-00	HOLDER, MOTOR THRUST
9	**3-530-249-XX**	**SPRING, TENSION (T16)**
10	3-630-912-00	WASHER, MINI JACK
11	3-642-684-00	SPACER, ARM
12	3-646-605-00	SPACER (B)
13	3-651-367-00	PLATE, ROTATION DETECTOR
14	3-651-499-00	STAY, TIMER WINDOW
15	3-651-500-00	BRACKET, DIODE
16	3-651-547-00	BRACKET (L), LOCK
17	3-651-549-00	BRACKET (R), LOCK
18	3-651-561-00	BRACKET, LAMP BOARD
19	3-651-562-00	BACKET (A), LOCK
20	3-651-568-00	BRACKET, FUNCTION
21	3-651-569-00	SHAFT, WHEEL
22	3-651-570-00	STOPPER
23	3-651-571-00	HOOK, SPRING
24	**3-651-572-00**	**SPRING, COMPRESSION**
25	3-651-573-00	BRACKET, F PANEL
26	3-651-574-00	SASH (A)
27	3-651-575-00	SASH (B)
28	3-651-576-00	BRACKET, RACK
29	3-651-590-00	BLIND, BUTTON
30	3-651-614-00	BRACKET (C), LOCK
31	3-651-620-00	TABLE, SLANT
32	3-651-641-00	MASK, LAMP
33	3-651-754-00	PLATE, FRICTION
34	3-659-222-00	CHASSIS (F), SIDE
35	9-911-850-XX	FELT, PROTECTION

NOTE:

1. Parts printed in Bold-Face type are normally stocked for replacement purposes. The remaining parts shown in this manual are not normally required for routine service work. Orders for parts not shown in Bold-Face type will be processed, but allow for additional delivery time.
2. Item with no part number and/or no description are not stocked because they are seldom required for routine service.
3. ●; PSW3x6 (Pan head screw with spring washer and flat washer)
   ○; PSW3x8 (Pan head screw with spring washer and flat washer)

CONNECTOR PANEL ASSEMBLY

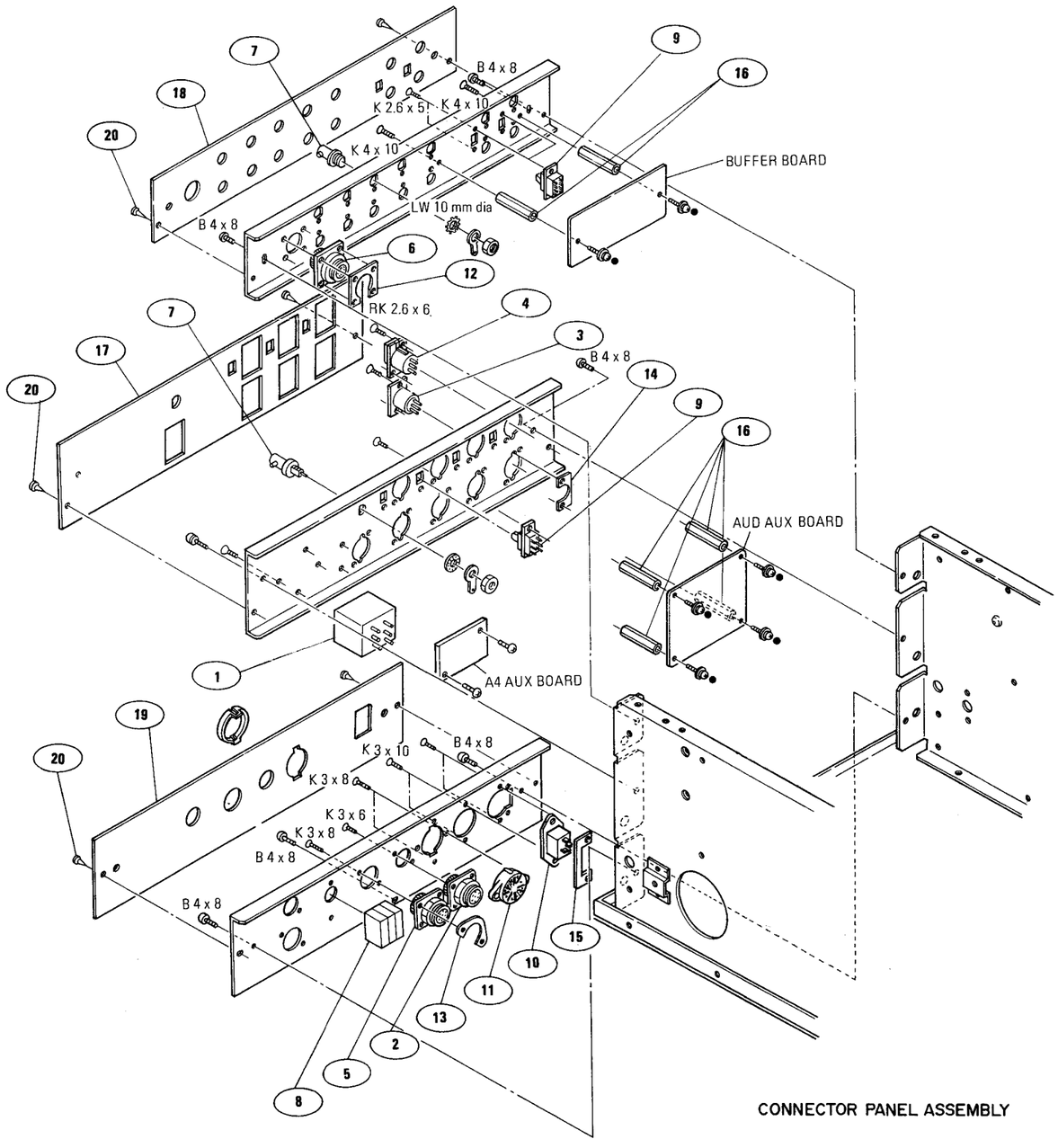

CONNECTOR PANEL ASSEMBLY

No.	Part No.	Description
1	**1-427-348-00**	**TRANSFORMER, AUDIO LINE OUT**
	1-427-422-00	**TRANSFORMER, AUDIO LINE OUT**
2	**1-508-382-00**	**RECEPTACLE, 10P**
3	**1-509-176-00**	**RECEPTACLE, XLR (FOR USA/CND/PS/PM)**
	1-509-184-00	**RECEPTACLE, XLR (FOR JAPAN)**
4	**1-509-184-00**	**RECEPTACLE, XLR (FOR USA/CND/PS/PM)**
	1-509-176-00	**RECEPTACLE, XLR (FOR JAPAN)**
5	**1-509-329-00**	**RECEPTACLE**
6	**1-509-471-00**	**RECEPTACLE, 18P**
7	**1-509-940-00**	**RECEPTACLE, BNC**
⚠8	**1-532-494-00**	**CIRCUIT BREAKER**
9	**1-552-078-00**	**SWITCH, SLIDE**
⚠10	**1-560-222-11**	**RECEPTACLE, AC IN (FOR USA/CND/PS/PM)**
	1-509-801-11	**RECEPTACLE, AC IN (FOR JAPAN)**
⚠11	**1-561-608-11**	**VOLTAGE SELECTOR**
12	**2-090-229-00**	**NUT, PLATE**
13	2-090-230-00	NUT, PLATE
14	2-243-720-00	NUT, PLATE
15	3-625-620-00	NUT PCATE (ONLY FOR JAPAN MODEL)
16	3-651-488-00	STUD, P
17	3-659-254-00	PLATE (AU), ORNAMENTAL (FOR USA/CND/PS/PM)
	3-659-261-00	PLATE (AU), ORNAMENTAL (FOR JAPAN)
	3-659-273-00	PLATE (AU), ORNAMENTAL (FOR A4 MODEL)
18	3-659-255-00	PLATE (VD), ORNAMENTAL
19	3-660-267-00	PLATE (AC), ORNAMENTAL (FOR USA/CND/PS/PM)
	3-660-268-00	PLATE (AC), ORNAMENTAL (FOR JAPAN)
20	**4-812-134-00**	**RIVET, NYLON**

NOTE:

1. **The shaded and ⚠ -marked components are critical to safety. Replace only with same components as specified.**
2. Parts printed in Bold-Face type are normally stocked for replacement purposes. The remaining parts shown in this manual are not normally required for routine service work. Orders for parts not shown in Bold-Face type will be processed, but allow for additional delivery time.
3. Item with no part number and/or no description are not stocked because they are seldom required for routine service.
4. ●; PSW3x6 (Pan head screw with spring washer and flat washer)
   ○; PSW3x8 (Pan head screw with spring washer and flat washer)

HEAD DRUM ASSEMBLY

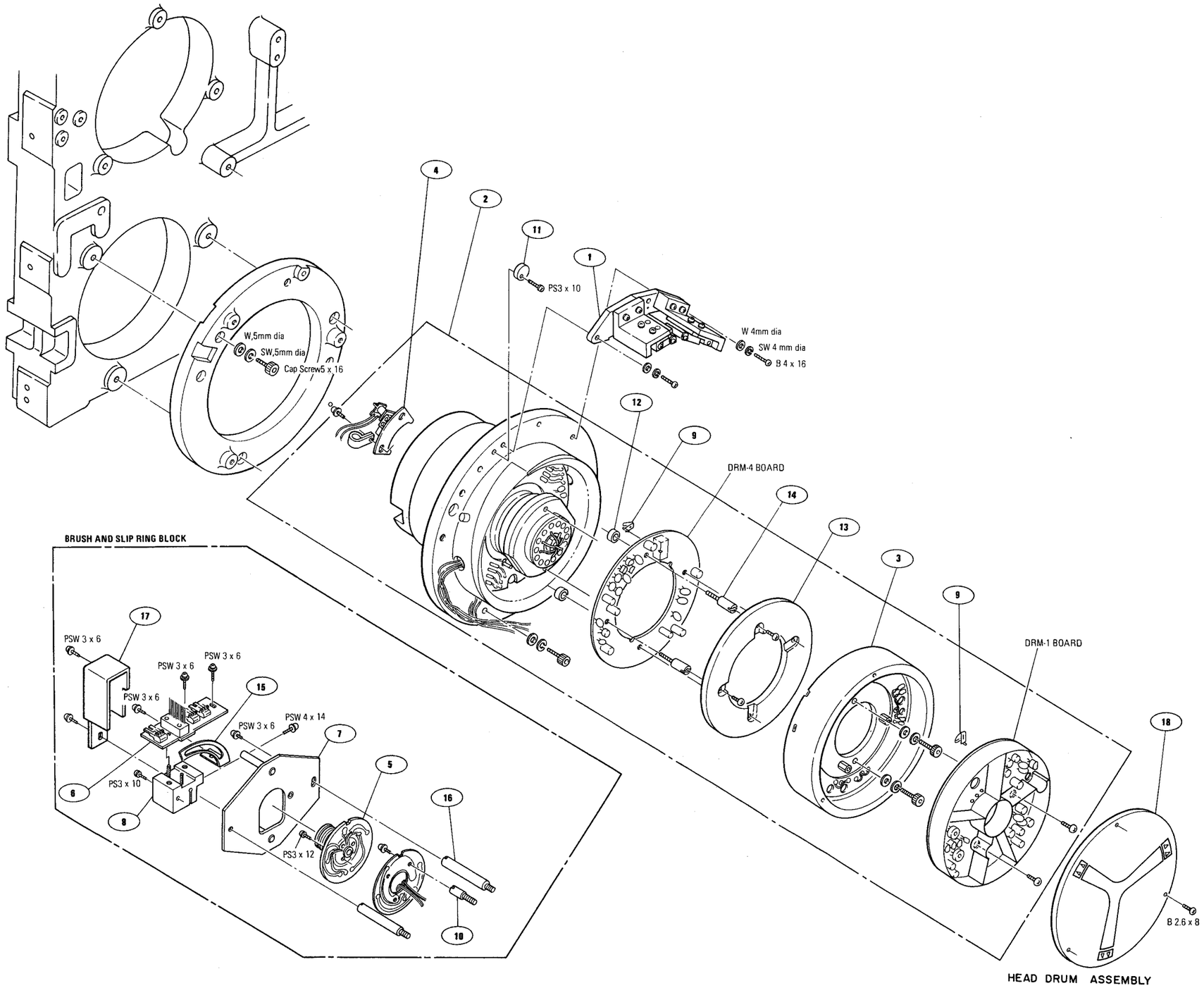

HEAD DRUM ASSEMBLY

No.	Part No.	Description
1	**A-6046-009-B**	**GUIDE ASS'Y, SLANT**
⚠2	**A-6050-048-A**	**RD-44RP WITHOUT DT (FOR NTSC, PM)**
	⚠A-6050-052-A	**RD-46RP WITHOUT DT (FOR PS)**
	⚠A-6050-077-A	**DMH-13A-R WITH DT (FOR NTSC, PM)**
	⚠A-6050-079-A	**DMH-14A-R WITH DT (FOR PS)**
3	**A-6052-024-A**	**RV-44RP WITHOUT DT (FOR NTSC, PM)**
	A-6052-028-A	**RV-46RP WITHOUT DT (FOR PS)**
	A-6052-034-A	**DMR-13-R WITH DT (FOR NTSC, PM)**
	A-6052-036-A	**DMR-14-R WITH DT (FOR PS)**
4	**A-6053-003-A**	**PG COIL ASS'Y**
5	**A-6709-292-A**	**SRC-2 ASS'Y**
6	**A-6709-293-A**	**SRC-1 ASS'Y**
7	X-3656-706-A	BRIDGE ASS'Y, SRC
8	X-3656-707-0	SUPPORT BROCK ASS'Y, SRC
9	1-560-240-00	CONTACT
10	2-618-228-00	SUPPORT, PG
11	3-651-330-00	STOPPER
12	3-656-710-00	SPACER, LOWER DRUM
13	3-656-721-03	PLATE, SHIELD
14	3-656-728-00	SHAFT, SHIELD PLATE
15	3-656-748-00	GUIDE, SRC
16	3-656-750-00	SUPPORT, SRC
17	3-656-767-00	COVER, SRC
18	3-659-248-00	LID, UPPER DRUM

NOTE:

1. **The shaded and ⚠ -marked components are critical to safety. Replace only with same components as specified.**
2. Parts printed in Bold-Face type are normally stocked for replacement purposes. The remaining parts shown in this manual are not normally required for routine service work. Orders for parts not shown in Bold-Face type will be processed, but allow for additional delivery time.
3. Item with no part number and/or no description are not stocked because they are seldom required for routine service.
4. ●; PSW3x6 (Pan head screw with spring washer and flat washer)
   ○; PSW3x8 (Pan head screw with spring washer and flat washer)

STATIONARY HEAD ASSEMBLY

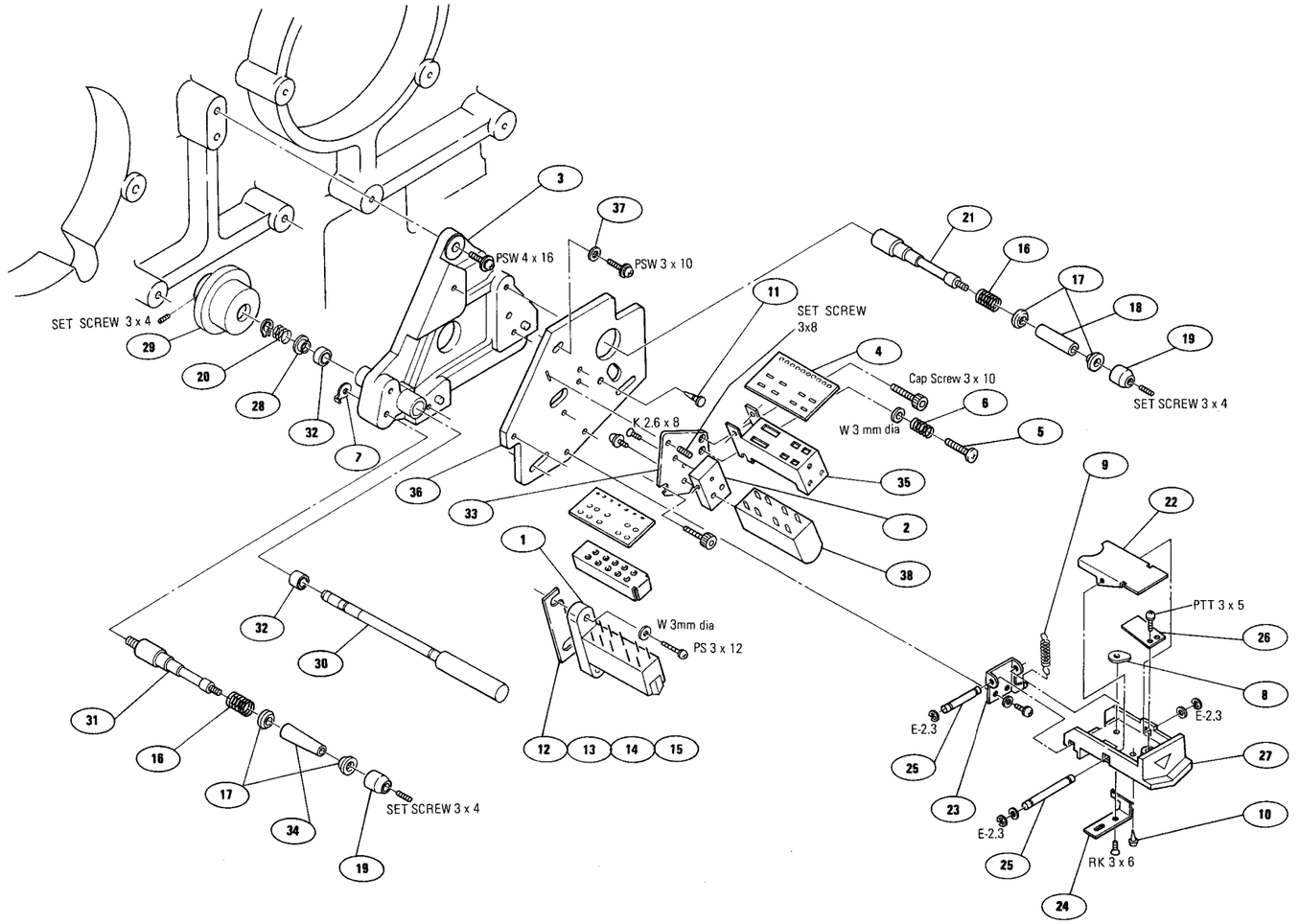

STATIONARY HEAD ASSEMBLY

No.	Part No.	Description
1	**A-6036-033-A**	**AUDIO ERASE HEAD ASS'Y (EXCEPT PS A4 MODEL)**
	A-6036-034-A	**AUDIO ERASE HEAD ASS'Y (ONLY FOR PS A4 MODEL)**
2	X-3659-203-0	SPACER ASS'Y, AUDIO HEAD FOR NTSC, PM, PS (EXCEPT A4) MODEL
	X-3659-210	SPACER ASS'Y, AUDIO HEAD FOR PS (ONLY A4) MODEL
3	X-3659-207-0	BASE ASS'Y, FIXED HEAD
4	1-588-947-00	PRINTED BOARD (EXCEPT PS A4 MODEL)
	1-588-948-00	PRINTED BOARD (ONLY FOR PS A4 MODEL)
5	3-437-173-02	SCREW, HEAE ADJUSTING
6	3-513-234-00	SPRING, COMPRESSION
7	3-534-233-00	NUT, ADJUSTMENT
8	3-630-411-00	NUT, PLATE
9	**3-639-381-XX**	**SPRING, TENSION (22T)**
10	3-642-047-00	STOP, HANDLE
11	3-644-002-00	CUSHION, HANDLE
12	**3-651-413-01**	**SPACER, ERASE HEAD t=0.02**
13	**3-651-413-11**	**SPACER, ERASE HEAD t=0.05**
14	**3-651-413-21**	**SPACER, ERASE HEAD t=0.1**
15	**3-651-413-31**	**SPACER, ERASE HEAD t=0.2**
16	**3-651-426-00**	**SPRING, COMPRESSION**
17	**3-651-427-00**	**FLANGE, TAPE GUIDE**
18	**3-651-428-00**	**TAPE GUIDE**
19	**3-651-643-02**	**CAP, TAPE GUIDE**
20	**3-651-750-00**	**SPRING, COMPRESSION**
21	3-651-805-02	SHAFT, TAPE GUIDE
22	3-651-838-05	SHIELD, FRONT
23	3-651-839-00	BRACKET, AUDIO HEAD
24	3-651-840-00	HOOK, SPRING
25	3-651-841-00	SHAFT, AUDIO HEAD
26	3-651-842-02	PLATE, SUPPORT
27	3-651-845-03	COVER, AUDIO HEAD
28	**3-654-809-00**	**SPACER (3)**
29	3-654-839-00	WHEEL, IP
30	**3-654-840-00**	**SHAFT, IP**
31	3-659-209-02	SHAFT, TAPER GUIDE
32	**3-659-213-00**	**BEARING, BALL**
33	3-659-215-00	CHASSIS, AUDIO HEAD
34	3-659-216-00	GUIDE, TAPERED
35	3-659-234-00	SHIELD CASE, AUDIO HEAD
36	3-659-243-00	BRACKET, FIXED HEAD
37	3-845-490-00	WASHER
38	**8-825-737-50**	**AUDIO HEAD (ONLY FOR PS A4 MODEL)**
	8-825-737-00	**AUDIO HEAD (EXCEPT PS A4 MODEL)**

NOTE:

1. Parts printed in Bold-Face type are normally stocked for replacement purposes. The remaining parts shown in this manual are not normally required for routine service work. Orders for parts not shown in Bold-Face type will be processed, but allow for additional delivery time.
2. Item with no part number and/or no description are not stocked because they are seldom required for routine service.

SUPPLY CAPSTAN ASSEMBLY

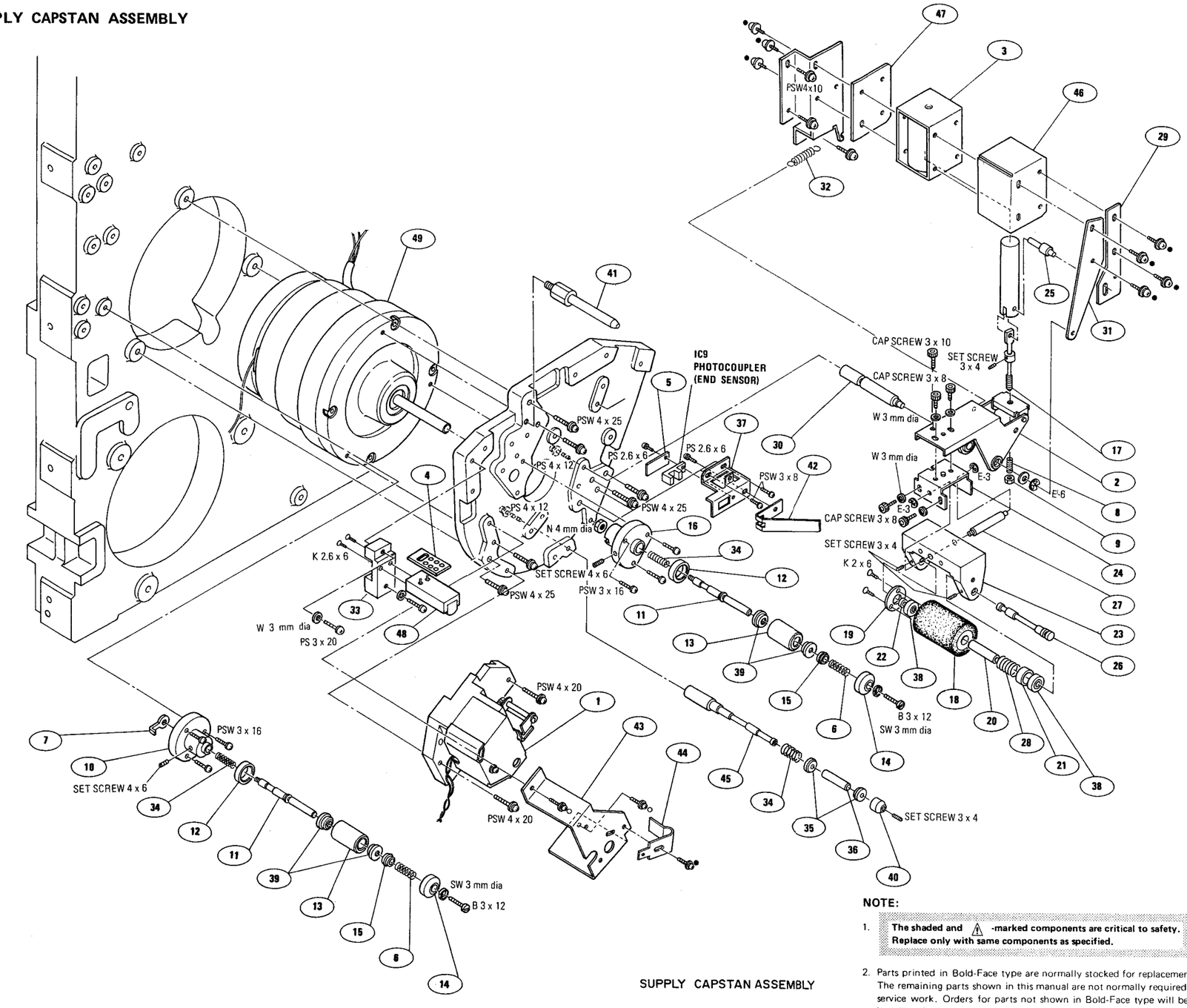

SUPPLY CAPSTAN ASSEMBLY

NOTE:

1. **The shaded and ⚠ -marked components are critical to safety. Replace only with same components as specified.**
2. Parts printed in Bold-Face type are normally stocked for replacement purposes. The remaining parts shown in this manual are not normally required for routine service work. Orders for parts not shown in Bold-Face type will be processed, but allow for additional delivery time.
3. Item with no part number and/or no description are not stocked because they are seldom required for routine service.
4. ●; PSW3x6 (Pan head screw with spring washer and flat washer)
   ○; PSW3x8 (Pan head screw with spring washer and flat washer)

No.	Part No.	Description
1	**A-6043-003-A**	**TENSION DETECTOR ASS'Y**
2	X-3651-316-0	PINCH LEVER ASS'Y, SUPPLY
3	**1-454-127-00**	**SOLENOID, TENSION PINCH (PM1)**
4	1-588-754-00	FEH-1 BOARD
5	1-603-024-00	SE-1 BOARD
6	**3-148-662-00**	**SPRING, COMPRESSION**
7	3-534-233-00	NUT, ADJUSTMENT
8	3-642-523-00	SPRING, COMPRESSION
9	3-648-057-00	NUT (ISO-4), U
10	3-651-359-00	BASE, GR SHAFT
11	3-651-360-00	SHAFT, GR
12	**3-651-361-00**	**FRANGE, GR LOWER**
13	**3-651-362-00**	**ROLLER, GUIDE**
14	**3-651-363-00**	**FLANGE, GR UPPER**
15	3-651-364-00	COLLAR, GR
16	3-651-365-00	BASE (2), GR SHAFT
17	3-651-385-00	ROD, SOLENOID JOINT
18	**3-651-386-00**	**ROLLER, PINCH**
19	3-651-387-00	HOLDER, BEARING
20	3-651-388-00	SPACER, PINCH
21	3-651-389-00	SPACER (1)
22	3-651-390-00	SPACER (2)
23	3-651-391-00	HOLDER, PINCH ROLLER
24	3-651-392-00	PINCH LEVER (2)
25	3-651-393-00	GUIDE PIN, SOLENOID
26	3-651-394-00	SHAFT, PINCH ROLLER
27	3-651-395-00	SHAFT, PINCH LEVER (2)
28	**3-651-396-00**	**SPRING, COMPRESSION**
29	3-651-397-00	GUIDE PLATE
30	3-651-405-00	SHAFT, PINCH LEVER
31	3-651-406-00	SUPPORT, LEVER SHAFT
32	3-651-407-00	SPRING, TENSION
33	3-651-409-00	BASE (A), ERASE HEAD
34	**3-651-426-00**	**SPRING, COMPRESSION**
35	**3-651-427-00**	**FLANGE, TAPE GUIDE**
36	**3-651-428-00**	**TAPE GUIDE**
37	3-651-460-03	BRACKET, END SENSOR
38	**3-651-606-00**	**BEARING**
39	**3-651-607-00**	**BEARING**
40	**3-651-643-02**	**COVER CAP, TAPE GUIDE**
41	3-651-648-00	SHAFT, PINCH COVER
42	3-651-650-00	BRACKET, GUIDE BOARD
43	3-651-662-00	BRACKET, TD COVER
44	3-651-804-00	GUIDE, TAPE SETTING
45	3-651-805-00	SHAFT, TAPE GUIDE
46	3-660-219-00	CASE (UPPER), SHIELD
47	3-660-220-00	CASE (LOWER), SHIELD
48	**8-828-957-00**	**FULL ERASE HEAD (EF18-51D)**
⚠ 49	**8-839-015-21**	**MOTOR, TENSION**
	3-701-446-11	**WASHER, 8**

TAKE-UP CAPSTAN ASSEMBLY

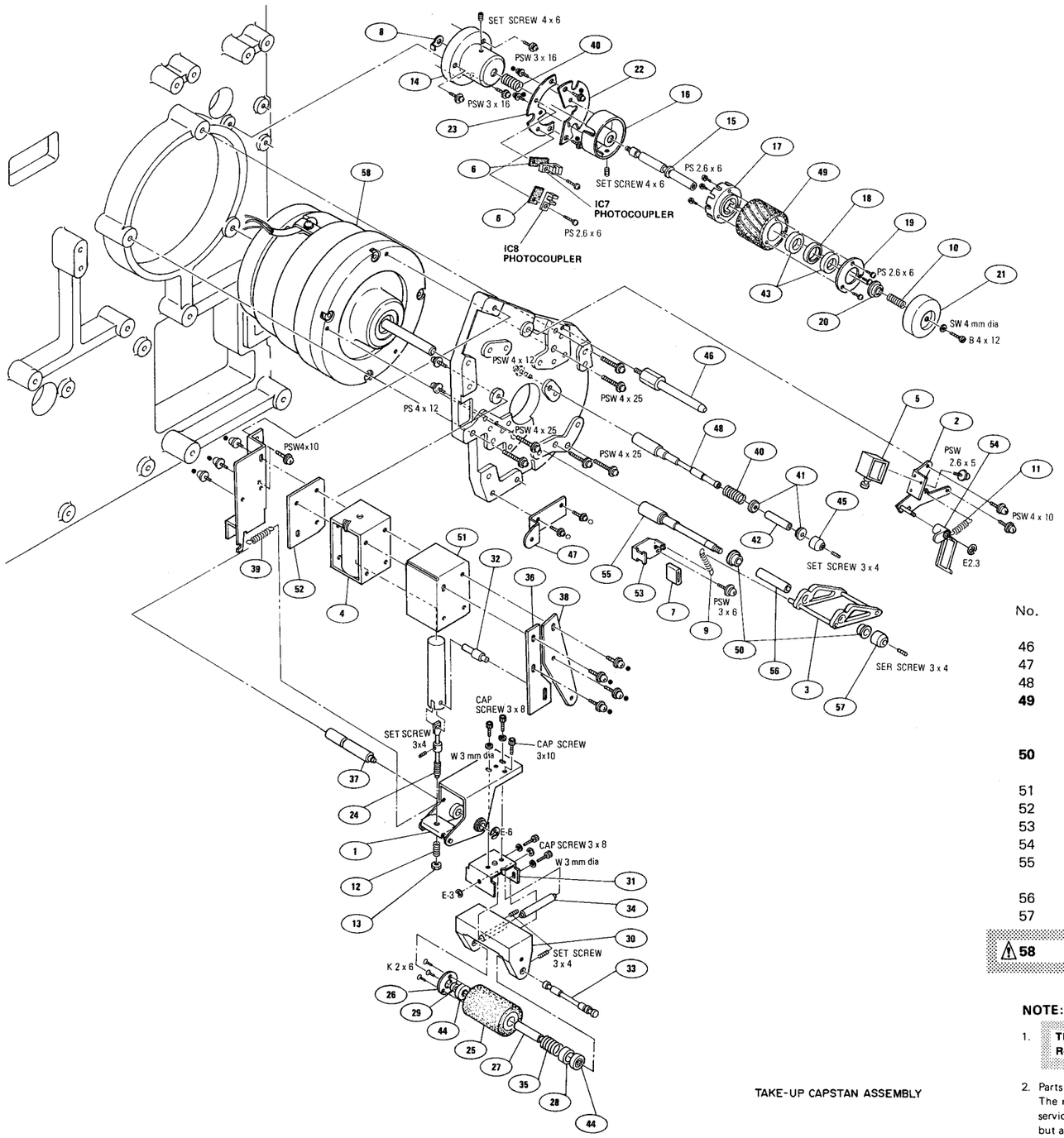

TAKE-UP CAPSTAN ASSEMBLY

No.	Parts No.	Description
46	3-651-648-00	SHAFT, PINCH COVER
47	3-651-649-00	BRACKET, REEL PANEL
48	3-651-805-00	SHAFT, TAPE GUIDE
49	**3-654-806-02**	**ROLLER, COUNTOR (FOR USA/CND/J/PM)**
	3-659-265-02	**ROLLER, COUNTER (FOR PS)**
50	**3-656-932-00**	**BEARING, BALL**
51	3-660-219-00	CASE (UPPER), SHIELD
52	3-660-220-00	CASE (LOWER), SHIELD
53	3-660-237-00	STOPPER, L ARM
54	3-660-256-00	LINK, L ARM
55	3-660-260-00	SHAFT, TAPE GUIDE
56	3-660-261-00	GUIDE, TAPE
57	3-660-262-00	RETAINER, TAPE GUIDE
⚠ 58	8-839-015-21	**MOTOR, CAPSTAN**

NOTE:

1. **The shaded and ⚠ -marked components are critical to safety. Replace only with same components as specified.**
2. Parts printed in Bold-Face type are normally stocked for replacement purposes. The remaining parts shown in this manual are not normally required for routine service work. Orders for parts not shown in Bold-Face type will be processed, but allow for additional delivery time.
3. Item with no part number and/or no description are not stocked because they are seldom required for routine service.
4. ● ; PSW3x6 (Pan head screw with spring washer and flat washer)
   ○ ; PSW3x8 (Pan head screw with spring washer and flat washer)

No.	Part No.	Description
1	X-3651-317-0	PINCH LEVER ASS'Y, TAKE-UP
2	X-3659-224-0	BASE ASS'Y, SOLENOID
3	X-3659-225-0	ARM ASS'Y, L
4	**1-454-127-00**	**SOLENOID, CAPSTAN PINCH**
5	**1-454-263-00**	**SOLENOID, PLUNGER**
6	1-603-025-00	SE-2 BOARD
7	3-483-026-00	BRACKET, MOTOR THRUST
8	3-534-233-00	NUT, ADJUSTMENT
9	**3-539-254-00**	**SPRING, TENSION**
10	3-618-023-00	SPRING, COMPRESSION
11	**3-630-615-XX**	**SPRING, TENSION**
12	3-642-523-00	SPRING, COMPRESSION
13	3-648-057-00	NUT (ISO-4), U
14	3-651-347-00	BASE, CR SHAFT
15	3-651-348-00	SHAFT, CR
16	**3-651-349-00**	**FLANGE, CR LOWER**
17	3-651-350-02	DISK, CR (FOR USA/CND/J/PM)
	3-659-263-00	DISK, CR (FOR PS)
18	3-651-352-00	SPACER, CR
19	3-651-353-00	HOLDER, BEARING
20	3-651-354-00	COLLAR, CR
21	**3-651-355-02**	**FLANGE, CR UPPER**
22	3-651-356-00	BRACKET (2), FC
23	3-651-358-02	BRACKET (1), FC
24	3-651-385-00	ROD, SOLENOID JOINT
25	**3-651-386-00**	**ROLLER, PINCH**
26	3-651-387-00	HOLDER, BEARING
27	3-651-388-00	SPACER, PINCH
28	3-651-389-00	SPACER (1)
29	3-651-390-00	SPACER (2)
30	3-651-391-00	HOLDER, PINCH ROLLER
31	3-651-392-00	PINCH LEVER (2)
32	3-651-393-00	GUIDE PIN, SOLENOID
33	3-651-394-00	SHAFT, PINCH ROLLER
34	3-651-395-00	SHAFT, PINCH LEVER (2)
35	**3-651-396-00**	**SPRING, COMPRESSION**
36	3-651-397-00	GUIDE PLATE
37	3-651-405-00	SHAFT, PINCH LEVER
38	3-651-406-00	SUPPORT, LEVER SHAFT
39	3-651-407-00	SPRING, TENSION
40	**3-651-426-00**	**SPRING, COMPRESSION**
41	**3-651-427-00**	**FLANGE, TAPE GUIDE**
42	**3-651-428-00**	**TAPE GUIDE**
43	**3-651-605-00**	**BEARING**
44	**3-651-606-00**	**BEARING**
45	**3-651-643-02**	**CAP, TAPE GUIDE**

REEL TABLE ASSEMBLY

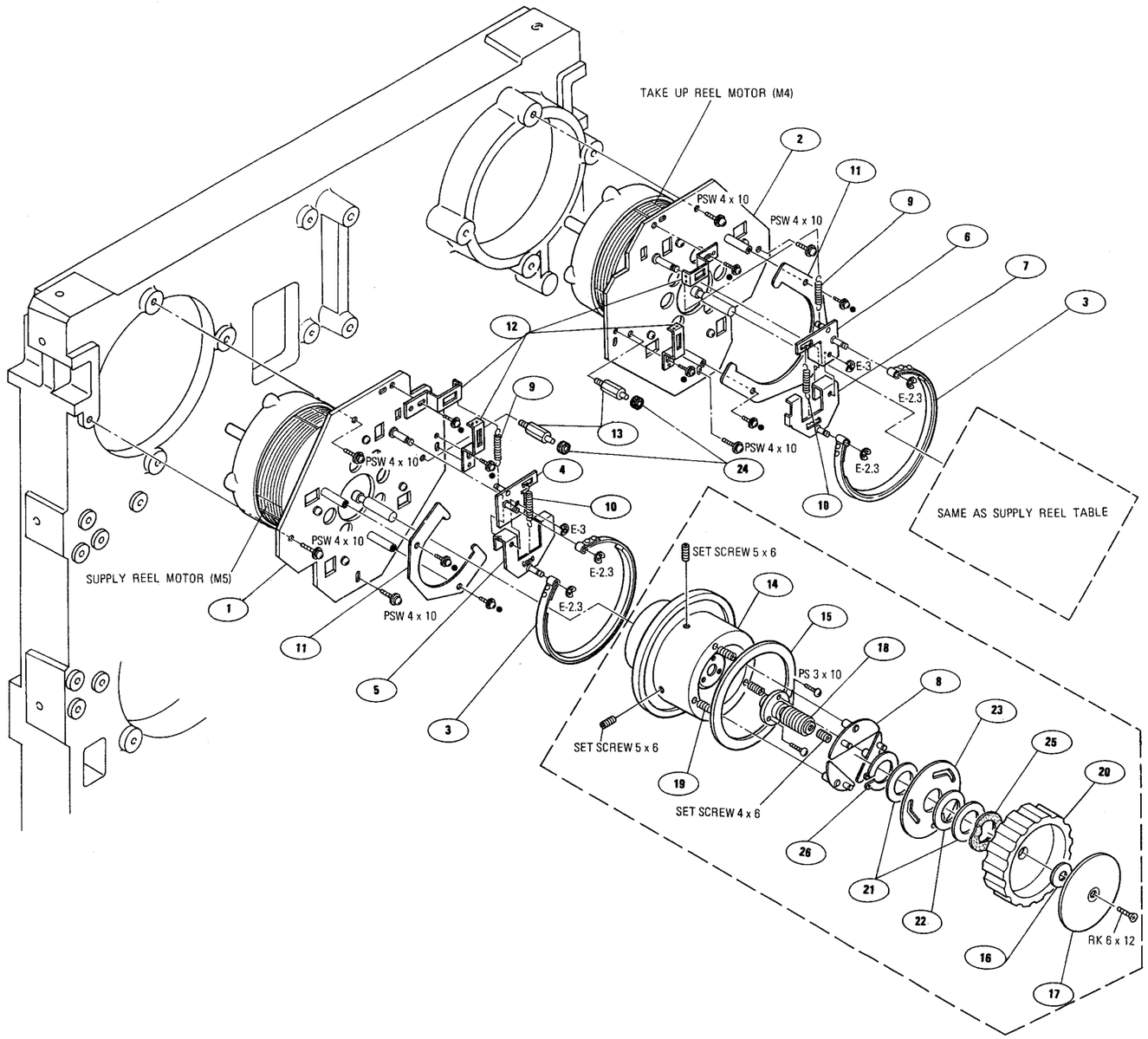

REEL TABLE ASSEMBLY

No.	Part No.	Description
⚠1	**A-6037-002-A**	**MOTOR ASS'Y SUPPLY REEL**
⚠2	**A-6037-003-A**	**MOTOR ASS'Y TAKE UP REEL**
3	**X-3651-308-0**	**BRAKE BAND ASS'Y**
4	X-3651-309-0	BRAKE LEVER (L) ASS'Y
5	X-3651-310-0	BRAKE ARM (L) ASS'Y
6	X-3651-311-0	BRAKE LEVER (R) ASS'Y
7	X-3651-312-0	BRAKE ARM (R) ASS'Y
8	**X-3651-315-0**	**REEL GUIDE ASS'Y**
9	**3-143-131-00**	**SPRING TENSION**
10	**3-465-158-XX**	**SPRING TENSION**
11	3-651-331-00	GUIDE, BRAKE BAND
12	3-651-332-02	STOPPER, BRAKE
13	3-651-333-00	STUD, REEL PANEL
14	3-651-370-02	DRUM, REEL
15	3-651-371-02	SHEET, REEL
16	3-651-372-00	WASHER, REEL
17	3-651-373-00	COVER
18	3-651-374-00	SHAFT, MAIN
19	3-651-375-00	SPRING, COMPRESSION
20	3-651-376-00	KNOB, REEL HOLDING
21	3-651-377-00	SHEET, FRICTION
22	3-651-378-00	SHEET, FRICTION ADJUSTING
23	3-651-379-00	CAM, REEL
24	3-815-122-00	BUSHING, RUBBER
25	**7-623-711-07**	**WASHER, WAVE 20MM DIA**
26	7-624-197-61	RING, RETAINING 19MM DIA

NOTE:

1. **The shaded and ⚠ -marked components are critical to safety. Replace only with same components as specified.**
2. Parts printed in Bold-Face type are normally stocked for replacement purposes. The remaining parts shown in this manual are not normally required for routine service work. Orders for parts not shown in Bold-Face type will be processed, but allow for additional delivery time.
3. Item with no part number and/or no description are not stocked because they are seldom required for routine service.
4. ● ; PSW3x6 (Pan head screw with spring washer and flat washer)
   o ; PSW3x8 (Pan head screw with spring washer and flat washer)

TENSION ARM ASSEMBLY

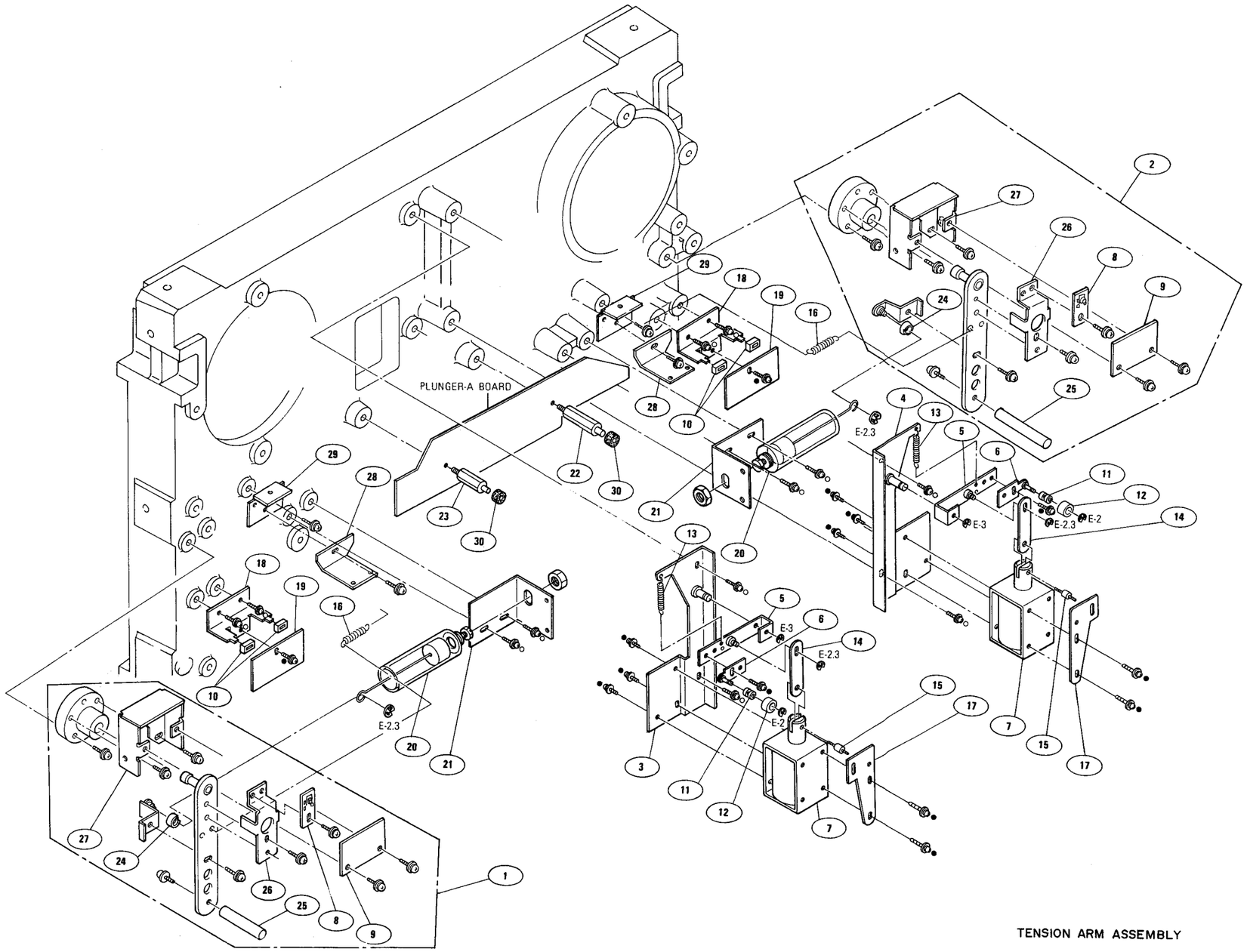

TENSION ARM ASSEMBLY

No.	Part No.	Description
1	**A-6042-009-A**	**SUPPLY TENSION ARM ASS'Y**
2	**A-6042-010-A**	**TAKE-UP TENSION ARM ASS'Y**
3	X-3651-306-0	B-SOL BASE (L) ASS'Y
4	X-3651-307-0	B-SOL BASE (R) ASS'Y
5	X-3651-313-0	LEVER ASS'Y, BRAKE RELEASE
6	X-3651-314-0	BS ADJUSTING PLATE ASS'Y
7	**1-454-125-00**	**SOLENOID, PLUNGER**
8	1-603-611-00	ARM LED, PWB
9	1-603-612-00	ARM POT, PWB
10	3-483-026-00	HOLDER, MOTOR THRUST
11	3-534-254-00	ROLLER, BRAKE CUSHION
12	3-534-255-00	CUSHION, BRAKE
13	**3-634-376-XX**	**SPRING, TENSION (9T)**
14	3-642-411-00	LEVER, SP JOINT
15	3-645-051-00	PIN, D PINCH SOLENOID
16	**3-646-306-00**	**SPRING, TENSION**
17	3-651-335-00	BRACKET, P
18	3-651-456-00	STOPPER, ARM
19	3-651-457-00	COVER
20	**3-651-458-00**	**AIR DUMPER**
21	3-651-459-00	BRACKET, DUMPER
22	3-651-645-00	HOLDER (A), REEL PANEL
23	3-651-646-00	HOLDER (B), REEL PANEL
24	3-660-224-00	FOOK GUARD
25	3-660-241-00	GUIDE, TENSION ARM
26	3-660-242-00	PLATE, DETECTION
27	3-660-243-00	BASE, DETECTION
28	3-660-270-00	HOOK (B)
29	3-660-271-00	HOOK (A)
30	3-815-122-00	GROMMET, RUBBER

NOTE:

1. Parts printed in Bold-Face type are normally stocked for replacement purposes. The remaining parts shown in this manual are not normally required for routine service work. Orders for parts not shown in Bold-Face type will be processed, but allow for additional delivery time.
2. Item with no part number and/or no description are not stocked because they are seldom required for routine service.
3. ●; PSW3x6 (Pan head screw with spring washer and flat washer)
   ○; PSW3x8 (Pan head screw with spring washer and flat washer)

SUB CONTROL BLOCK ASSEMBLY

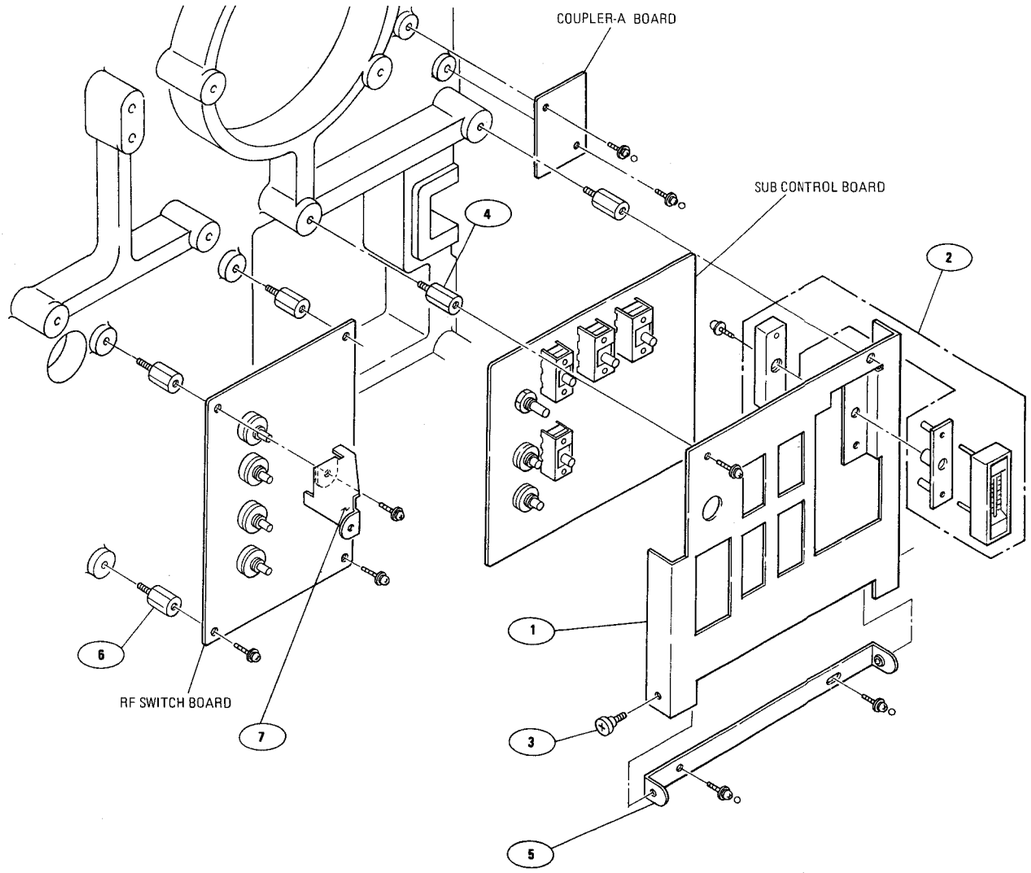

SUB- CONTROL CHASSIS ASSEMBLY

No.	Part No.	Description
1	X-3659-204-2	PANEL (2) ASS'Y SUB
2	**1-548-903-00**	**HOURS METER (TM1)**
3	**3-486-138-00**	**SHAFT, SCREW**
4	3-651-595-00	SUPPORT, SHIELD PLATE
5	3-659-223-00	HING (2), SUB PANEL
6	3-659-228-00	SUPPORT, RF SW
7	3-659-231-00	BRACKET (2), DRUM PANEL

NOTE:

1. Parts printed in Bold-Face type are normally stocked for replacement purposes. The remaining parts shown in this manual are not normally required for routine service work. Orders for parts not shown in Bold-Face type will be processed, but allow for additional delivery time.
2. Item with no part number and/or no description are not stocked because they are seldom required for routine service.
3. ● ; PSW3x6 (Pan head screw with spring washer and flat washer)
   ○ ; PSW3x8 (Pan head screw with spring washer and flat washer)

BASE CHASSIS FRAME ASSEMBLY

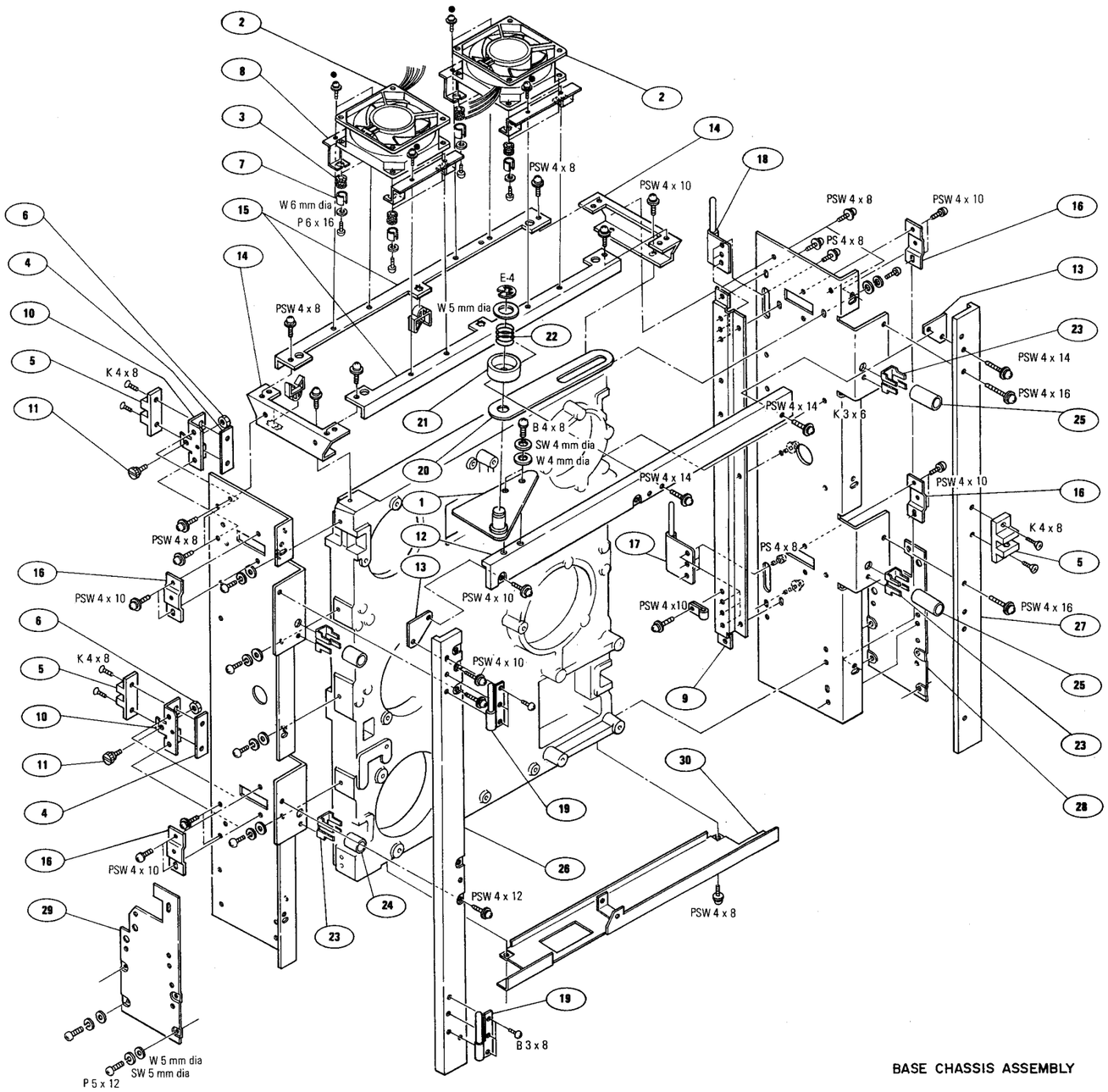

BASE CHASSIS ASSEMBLY

No.	Part No.	Description
1	X-3651-348-0	STOPPER SHAFT ASS'Y
⚠2	**1-541-122-00**	**FAN MOTOR (4201-NF8-5)**
3	2-019-616-00	BUSING, RUBBER
4	3-638-618-00	NUT PLATE (B), CATCH
5	3-638-650-00	CATCH
6	3-648-057-00	NUT (ISO-4), U
7	3-651-485-00	SPACER, (6x4)
8	3-651-508-00	BRACKET, FAN
9	3-651-544-00	BRACKET, HINGE
10	3-651-545-00	HOLDER (1), CATCH
11	3-651-546-00	SCREW, AMP CHASSIS
12	3-651-585-00	SASH (C)
13	3-651-588-00	RETAINER, SASH
14	3-651-592-00	CHASSIS SUPPORT, SIDE
15	3-651-593-00	SUPPORT, ANGLE
16	3-651-594-00	BRACKET, SIDE COVER
17	3-651-602-00	HINGE (1)
18	3-651-603-00	HINGE (2)
19	3-651-651-00	HINGE (A)
20	3-651-748-00	STOPPER
21	3-651-749-00	HOLDER, SPRING
22	**3-651-750-00**	**SPRING, COMPRESSION**
23	3-651-770-00	BRACKET, SCREW GUIDE
24	3-651-771-00	SCREW GUIDE (S)
25	3-651-772-00	SCREW GUIDE (T)
26	3-651-777-00	SASH (D)
27	3-651-778-00	SASH (E)
28	3-651-779-00	CONNECTOR, L CHASSIS
29	3-651-780-00	CONNECTOR, R CHASSIS
30	3-651-781-00	BRACKET, DRUM PANEL

NOTE:

1. **The shaded and ⚠ -marked components are critical to safety. Replace only with same components as specified.**
2. Parts printed in Bold-Face type are normally stocked for replacement purposes. The remaining parts shown in this manual are not normally required for routine service work. Orders for parts not shown in Bold-Face type will be processed, but allow for additional delivery time.
3. Item with no part number and/or no description are not stocked because they are seldom required for routine service.
4. ●; PSW3x6 (Pan head screw with spring washer and flat washer)
   ○; PSW3x8 (Pan head screw with spring washer and flat washer)

BASE CHASSIS REAR ASSEMBLY

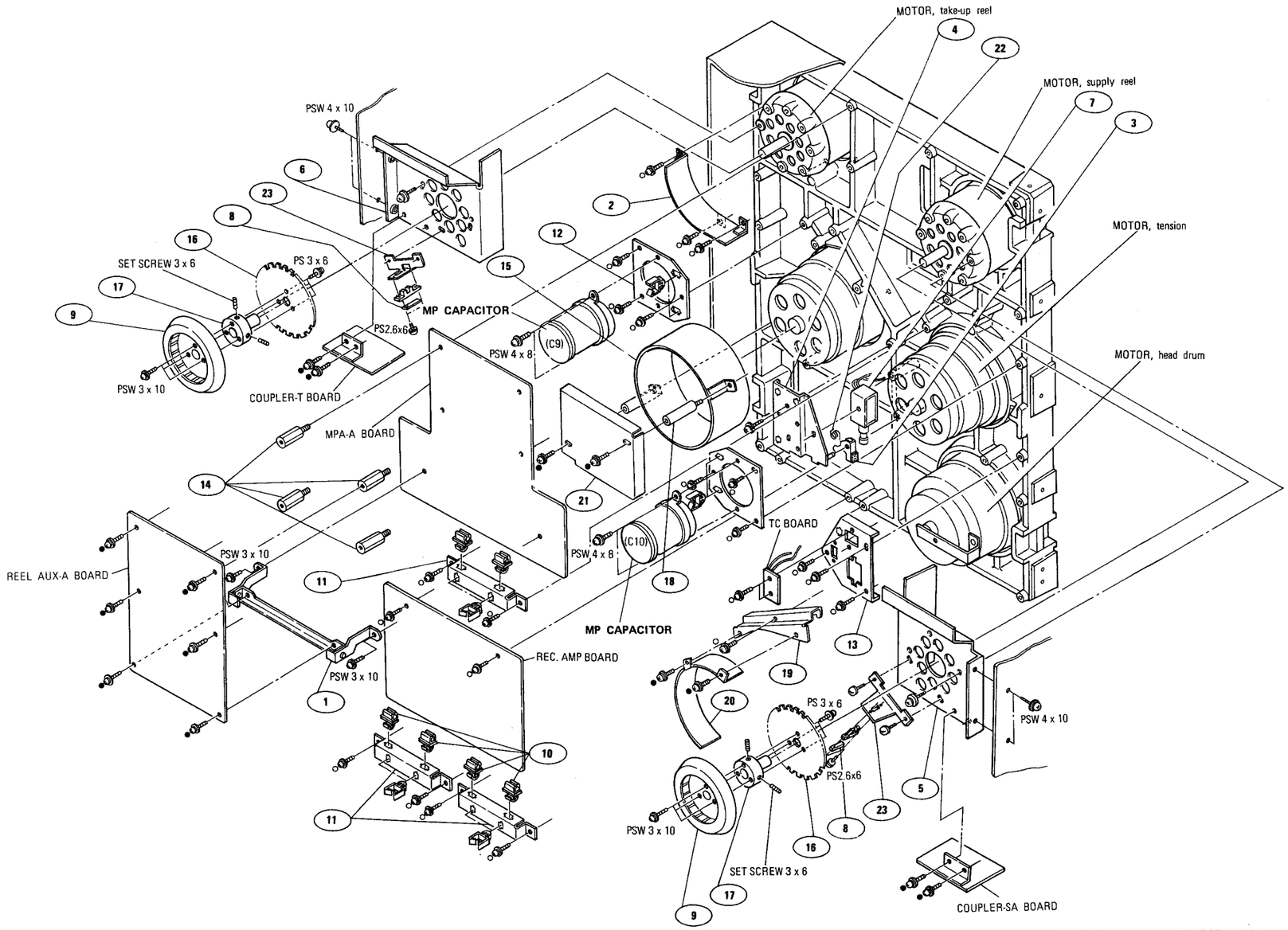

BASE CHASSIS REAR ASSEMBLY

No.	Part No.	Description
1	X-3651-301-0	REEL AUX ASS'Y
2	X-3651-362-0	CASE ASS'Y, R SHIELD
3	**X-3659-201-0**	**LINK (2) ASS'Y, BRAKE**
4	X-3659-202-0	BRACKET ASS'Y, BRAKE
5	X-3659-218-0	STAY ASS'Y, S REEL MOTOR
6	X-3659-219-0	STAY ASS'Y, T REEL MOTOR
7	**1-454-185-21**	**SOLENOID**
8	1-603-025-00	SE-2 BOARD
9	3-610-347-00	FAN, VENTILATION
10	3-642-310-00	HOLDER, PWB
11	3-651-306-00	HOLDER, MPA
12	3-651-307-00	SUPPORT PLATE, CAPACITOR
13	3-651-308-00	BRACKET, CONNECTOR
14	3-651-310-00	STUD, REEL AUX
15	3-651-314-00	SHIELD CASE (C)
16	3-651-367-00	PLATE, ROTATION DETECTOR
17	3-651-368-00	FLAGE, ROTATION DETECTOR
18	3-651-798-00	STUD, SHIELD PLATE
19	3-651-799-00	BRACKET, DM SHIELD
20	3-651-800-00	SHIELD CASE, DM
21	3-651-801-00	SHIELD CASE, CM
22	3-654-844-00	SPRING
23	3-660-238-00	BRACKET, ROTATION DETECTOR

NOTE:

1. Parts printed in Bold-Face type are normally stocked for replacement purposes. The remaining parts shown in this manual are not normally required for routine service work. Orders for parts not shown in Bold-Face type will be processed, but allow for additional delivery time.
2. Item with no part number and/or no description are not stocked because they are seldom required for routine service.
3. ●; PSW3x6 (Pan head screw with spring washer and flat washer)
   ○; PSW3x8 (Pan head screw with spring washer and flat washer)

AMP CHASSIS ASSEMBLY

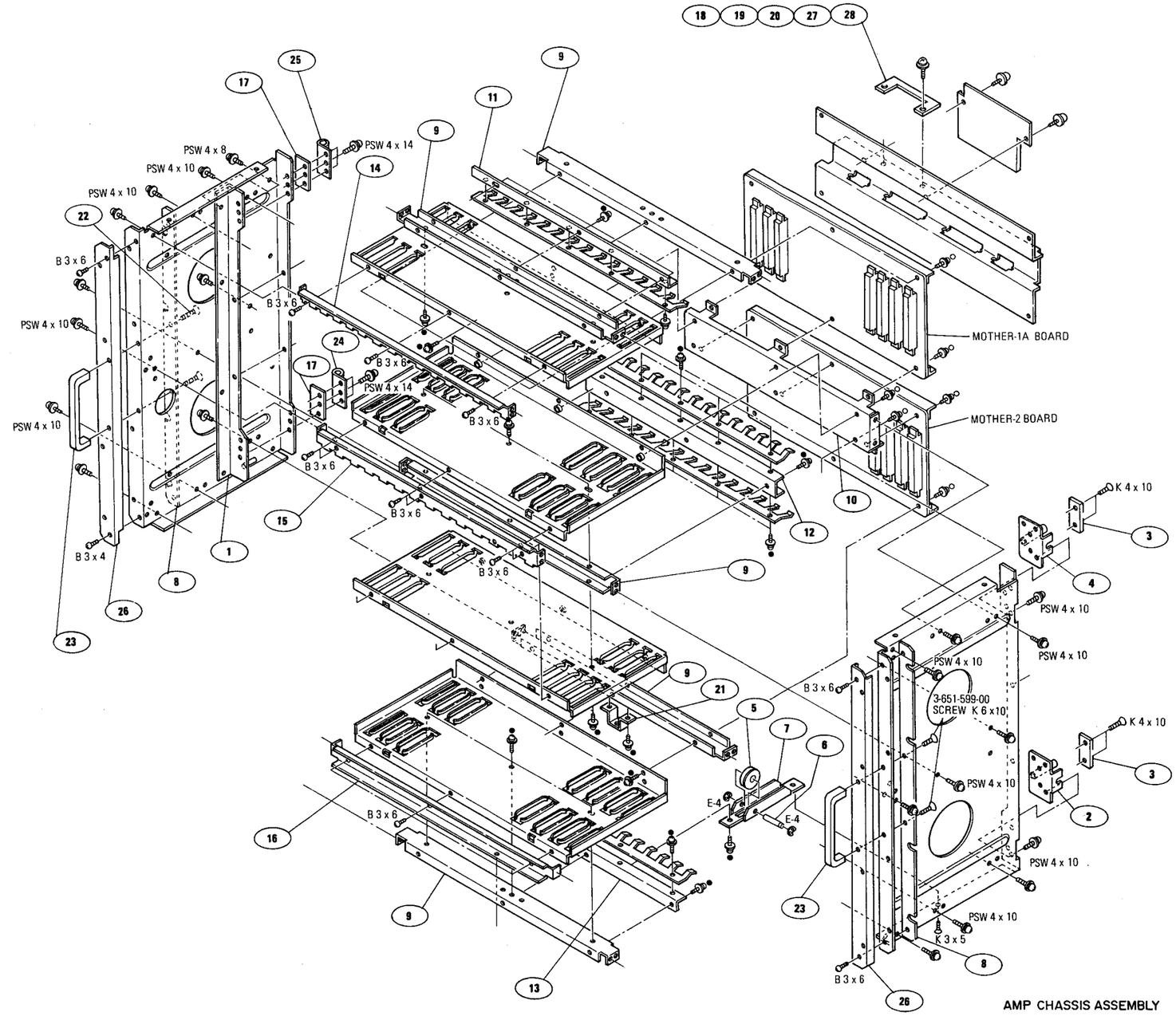

AMP CHASSIS ASSEMBLY

No.	Part No.	Description
1	X-3651-327-0	REINFORCEMENT ASS'Y, AMP CHASSIS
2	X-3651-333-0	CATCH BRACKET ASS'Y
3	3-638-650-00	CATCH
4	3-651-519-00	BRACKET, CATCH
5	3-651-523-00	ROLLER
6	3-651-524-00	SHAFT, ROLLER
7	3-651-525-00	BRACKET, ROLLER
8	3-651-526-00	SPACER, AMP SIDE PLATE
9	3-651-527-00	SUPPORTING BRACKET (1), CHASSIS
10	3-651-528-00	SUPPORTING BRACKET (2), CHASSIS
11	3-651-529-00	HOLDER (UPPER), SHIELD GROUNDING
12	3-651-530-00	HOLDER (MIDDLE), SHIELD GROUNDING
13	3-651-531-00	HOLDER (LOWER) SHIELD GROUNDING
14	3-651-536-00	BRACKET (UPPER), COVER
15	3-651-537-00	BRACKET (MIDDLE), COVER
16	3-651-538-00	BRACKET (LOWER), COVER
17	3-651-539-00	SPACER, HINGE
18	3-651-540-00	PLATE NUT (A), CONNECTOR W=29
19	3-651-541-00	PLATE NUT (B), CONNECTOR W=43
20	3-651-542-00	PLATE NUT (C), CONNECTOR W=56
21	3-651-543-00	LOCK SUPPORT, AMP CHASSIS
22	3-651-599-00	SCREW, COUNTERSUNK K6x10
23	3-651-601-00	HANDLE
24	3-651-602-00	HINGE (1)
25	3-651-603-00	HINGE (2)
26	3-651-653-00	ORNAMENTAL PANEL, AMP
27	3-659-229-00	PLATE NUT (E), CONNECTOR W=19
28	3-659-230-00	PLATE NUT (F), CONNECTOR W=24

NOTE:

1. Parts printed in Bold-Face type are normally stocked for replacement purposes. The remaining parts shown in this manual are not normally required for routine service work. Orders for parts not shown in Bold-Face type will be processed, but allow for additional delivery time.
2. Item with no part number and/or no description are not stocked because they are seldom required for routine service.
3. ●; PSW3x6 (Pan head screw with spring washer and flat washer)
   ○; PSW3x8 (Pan head screw with spring washer and flat washer)

POWER SUPPLY ASSEMBLY

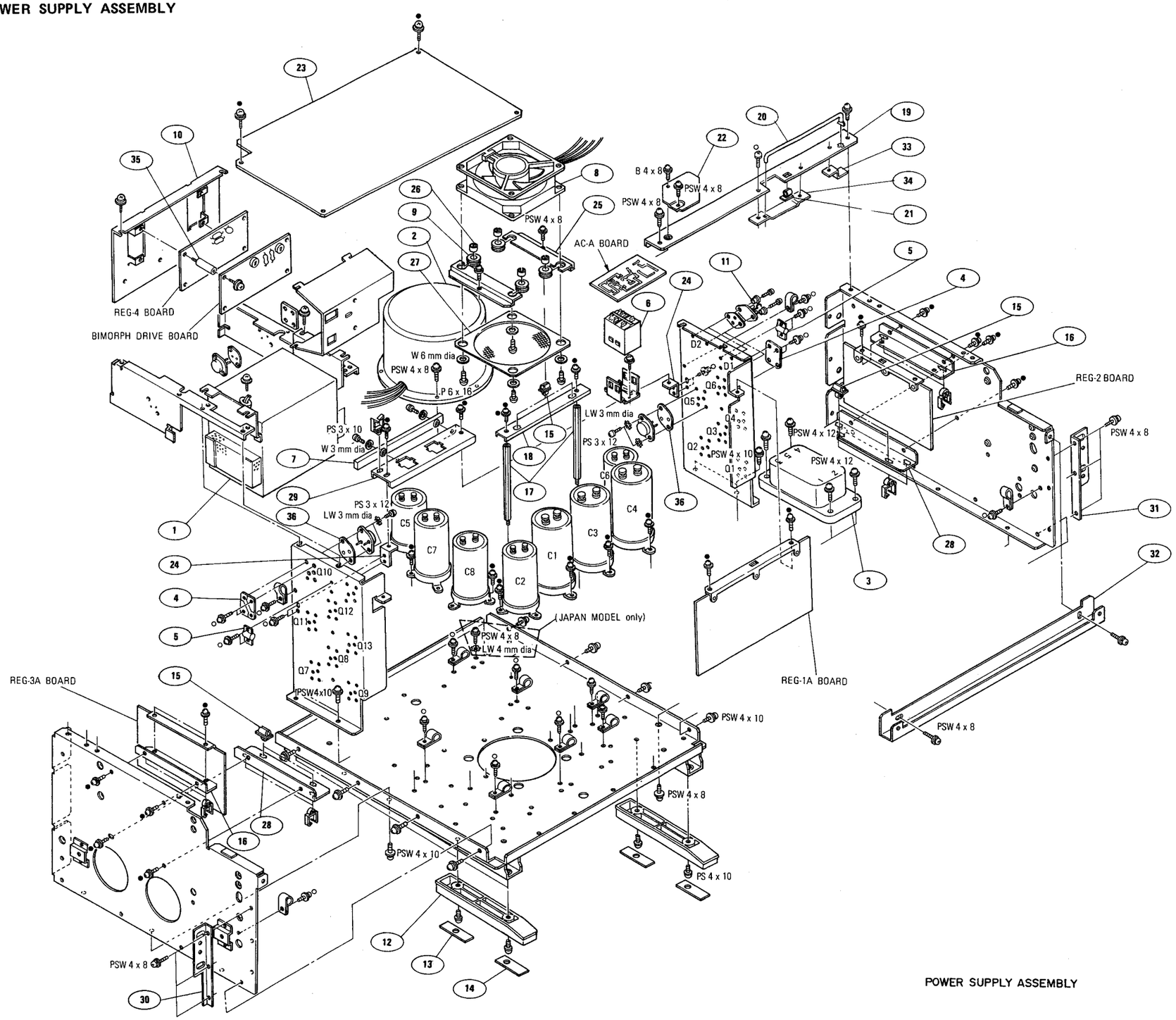

POWER SUPPLY ASSEMBLY

No.	Part No.	Description
⚠1	**1-413-058-00**	**SWITCHING REGULATOR**
⚠2	**1-446-880-00**	**TRANSFORMER, POWER**
⚠3	**1-464-072-00**	**NOISE FILTER**
4	**1-509-437-00**	**SOCKET, POWER TRANSISTOR**
5	**1-515-280-00**	**THERMAL RELAY**
6	**1-515-388-21**	**RELAY, POWER**
7	1-536-455-12	TERMINAL, 16P
⚠8	**1-541-121-00**	**FAN MOTOR**
9	2-019-616-00	BUSHING, RUBBER
10	2-260-906-02	CHASSIS, DT
11	**2-832-003-00**	**BUSHING, INSULATION**
12	**3-539-412-00**	**FOOT, CABINET**
13	3-539-448-12	FELT
14	3-539-448-22	FELT
15	3-642-310-00	HOLDER, CIRCUIT BOARD
16	3-651-464-00	PLATE (U), REG
17	3-651-465-00	STUD, REG
18	3-651-466-00	BRACKET (F), REG
19	3-651-469-02	STAY
20	3-651-470-00	ROD, STOP
21	3-651-471-00	HOLDER, ROD
22	3-651-473-00	HOLDER, ROLLER
23	3-651-474-00	COVER, P
24	3-651-481-00	PLATE, TERMINAL
25	3-651-484-00	BRACKET, FAN
26	3-651-485-00	SPECER, (6x4)
27	3-651-486-00	COVER, FAN
28	3-651-493-00	BRACKET (L), REG
29	3-651-494-03	BRACKET TERMINAL
30	3-651-773-00	FIN (L), POWER CHASSIS
31	3-651-774-00	FIN (R), POWER CHASSIS
32	3-651-791-00	STAY, SIDE PANEL
33	3-651-835-00	BRACKET, STOP ROD
34	3-651-836-00	BRACKET, ROD HOLDER
35	3-657-824-00	SUPPORT, PC BOARD
36	**3-701-353-00**	**SPACER, MICA**

NOTE:

1. **The shaded and ⚠ -marked components are critical to safety. Replace only with same components as specified.**
2. Parts printed in Bold-Face type are normally stocked for replacement purposes. The remaining parts shown in this manual are not normally required for routine service work. Orders for parts not shown in Bold-Face type will be processed, but allow for additional delivery time.
3. Item with no part number and/or no description are not stocked because they are seldom required for routine service.
4. ●; PSW3x6 (Pan head screw with spring washer and flat washer)
   ○; PSW3x8 (Pan head screw with spring washer and flat washer)

PWB SHIELD PLATE ASSEMBLY

RF EQ-1 BOARD
DEMOD-A BOARD (FOR PS MODEL)
DEMOD BOARD (FOR NTSC, PM MODEL)
COLOR (1) BOARD
(OPTION)
COLOR (3) BOARD
(OPTION)

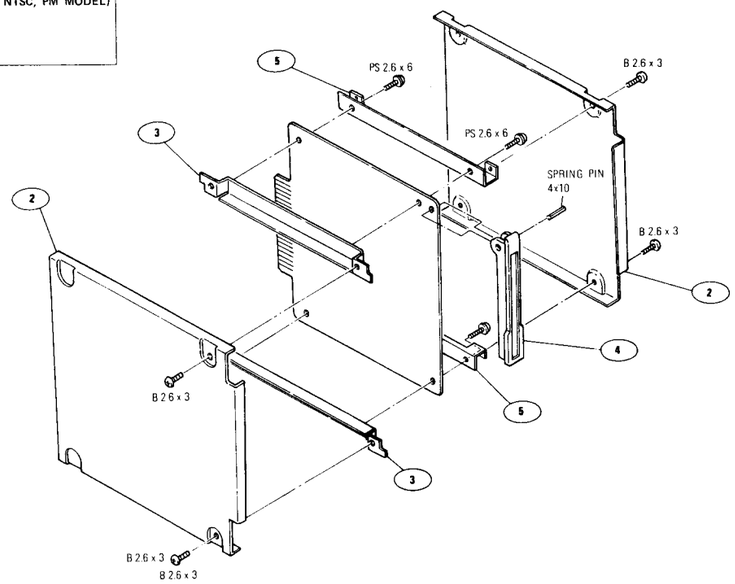

AUDIO-1 & -2 BOARD
AUDIO-3 BOARD
AUDIO-4 BOARD

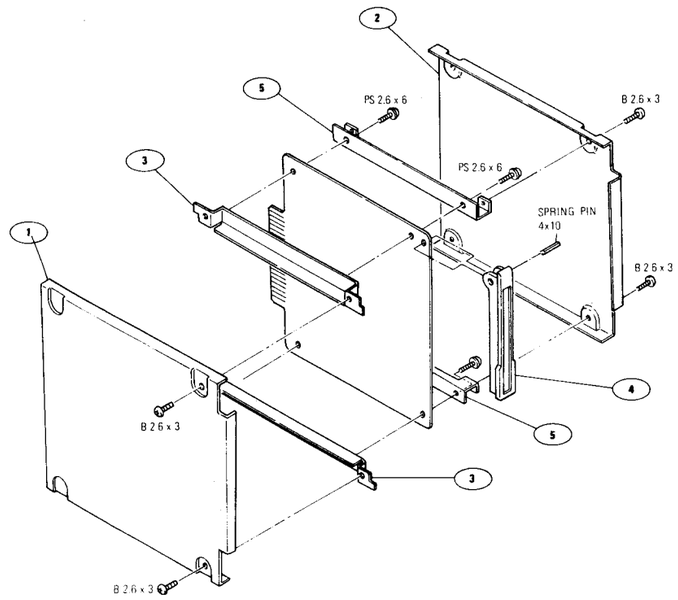

No.	Part No.	Description
1	X-3651-359-0	SHIELD PLATE (B) ASS'Y
2	X-3651-360-0	SHIELD PLATE (A) ASS'Y
3	3-651-502-00	BRACKET (2), SHIELD
4	3-651-504-00	LEVER, CIRCUIT BOARD
5	3-651-505-00	BRACKET (1), SHIELD
6	3-651-507-00	SPACER, CIRCUIT BOARD

NOTE:

1. Parts printed in Bold-Face type are normally stocked for replacement purposes. The remaining parts shown in this manual are not normally required for routine service work. Orders for parts not shown in Bold-Face type will be processed, but allow for additional delivery time.
2. Item with no part number and/or no description are not stocked because they are seldom required for routine service.
3. ●; PSW3x6 (Pan head screw with spring washer and flat washer)
   ○; PSW3x8 (Pan head screw with spring washer and flat washer)

BIAS BOARD

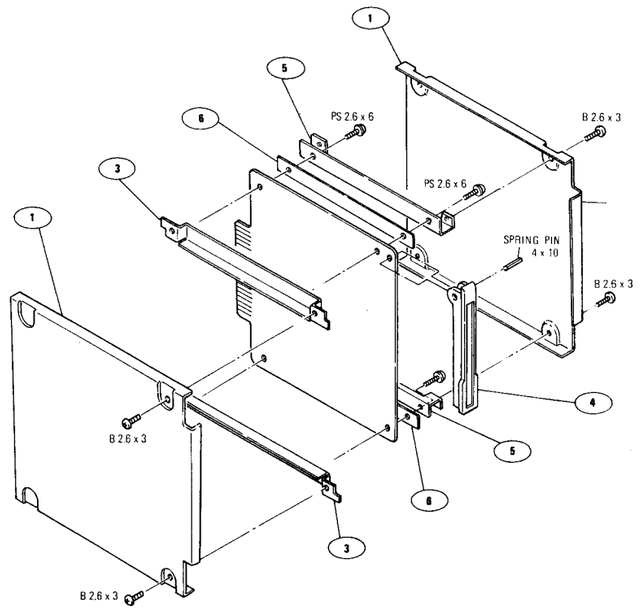

RF EQ-2 BOARD
MOD BOARD
LINE OUT BOARD
REEL-1A BOARD
REEL-2A BOARD
SYNC PULSE BOARD
FRAMING-A BOARD
DRUM BOARD
CAPSTAN-A BOARD
TENSION-A BOARD
SYS-1 BOARD
SYS-2 BOARD
SYS-3A BOARD
TAPE TIMER-A BOARD
AUD LOGIC BOARD
VIDEO LOGIC BOARD
COLOR (2) BOARD
(OPTION)
COLOR (4) BOARD
(OPTION)
TIME CODE-1 BOARD
(OPTION)
TIME CODE-2 BOARD
(OPTION)
D. TRACKING-1 BOARD
D. TRACKING-2 BOARD

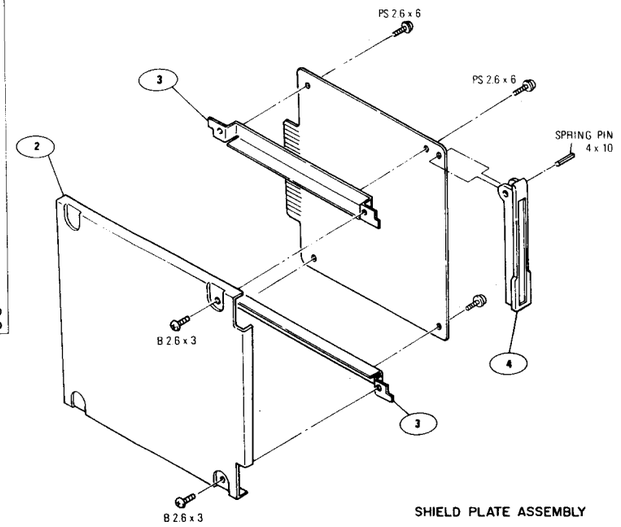

SHIELD PLATE ASSEMBLY

NOTES FOR PARTS LIST

1. **The shaded and ⚠-marked components are critical to safety.**
   Replace only with same component as specified.

2. Parts printed in **Bold-Face type** are normally stocked for replacement purposes. The remaining parts shown in this manual are not normally required for routine service work. Orders for parts not shown in Bold-Face type will be processed, but allow for additional delivery time.

3. **Units of Capacitance, Inductance and Resistance**
   All capacitors are in micro farads unless otherwise specified.
   All inductors are in micro henries unless otherwise specified.
   All resistors are in ohms.

4. **Omitted Parts**

   The following parts are not listed in the "reference numbers order list".

TERMINAL, TP (HOT)	2-252-662-00
TERMINAL, TP (COLD)	2-252-662-11

RESISTOR

Parts that are not listed in the "reference numbers order list" are shown in following table.
Reference numbers are omitted.

CARBON RESISTOR (1/4W) **±5%, 1/4W, non-special type**
1 Ω through 1 MΩ

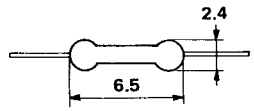

Parts No. 1-246-□□□-00

Value	Parts No. –□□□–
1 Ω	401
1.1	402
1.2	403
1.3	404
1.5	405
1.6	406
1.8	407
2	408
2.2	409
2.4	410
2.7	411
3	412
3.3	413
3.6	414
3.9	415
4.3	416
4.7	417
5.1	418
5.6	419
6.2	420
6.8	421
7.5	422
8.2	423
9.1	424
10 Ω	425
11	426
12	427
13	428
15	429
16	430
18	431
20	432
22	433
24	434
27	435
30	436

Value	Parts No. –□□□–
33 Ω	437
36	438
39	439
43	440
47	441
51	442
56	443
62	444
68	445
75	446
82	447
91	448
100 Ω	449
110	450
120	451
130	452
150	453
160	454
180	455
200	456
220	457
240	458
270	459
300	460
330	461
360	462
390	463
430	464
470	465
510	466
560	467
620	468
680	469
750	470
820	471
910	472

Value	Parts No. –□□□–
1 kΩ	473
1.1	474
1.2	475
1.3	476
1.5	477
1.6	478
1.8	479
2	480
2.2	481
2.4	482
2.7	483
3.0	484
3.3	485
3.6	486
3.9	487
4.3	488
4.7	489
5.1	490
5.6	491
6.2	492
6.8	493
7.5	494
8.2	495
9.1	496
10 kΩ	497
11	498
12	499
13	500
15	501
16	502
18	503
20	504
22	505
24	506
27	507
30	508

Value	Parts No. –□□□–
33 kΩ	509
36	510
39	511
43	512
47	513
51	514
56	515
62	516
68	517
75	518
82	519
91	520
100 kΩ	521
110	522
120	523
130	524
150	525
160	526
180	527
200	528
220	529
240	530
270	531
300	532
330	533
360	534
390	535
430	536
470	537
510	538
560	539
620	540
680	541
750	542
820	543
910	544
1 MΩ	545

CAPACITOR

Parts that are not listed in the "reference numbers order list" are shown in following table.
Reference numbers are omitted.

MYLAR CAPACITOR

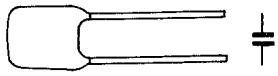

0.001μF through 0.22μF
±5% 50WV

Parts No. 1-108-□□□-00

Value	Parts No. −□□□−
0.001μF	555
0.0011	556
0.0012	557
0.0013	558
0.0015	559
0.0016	560
0.0018	561
0.0020	562
0.0022	563
0.0024	564
0.0027	565
0.0030	566
0.0033	567
0.0036	568
0.0039	569

Value	Parts No. −□□□−
0.0043μF	570
0.0047	571
0.0051	572
0.0056	573
0.0062	574
0.0068	575
0.0075	576
0.0082	577
0.0091	578
0.01	579
0.011	580
0.012	581
0.013	582
0.015	583
0.016	584

Value	Parts No. −□□□−
0.018μF	585
0.020	586
0.022	587
0.024	588
0.027	589
0.030	590
0.033	591
0.036	592
0.039	593
0.043	594
0.047	595
0.051	596
0.056	597
0.062	598
0.068	599

Value	Parts No. −□□□−
0.075μF	600
0.082	601
0.091	602
0.1	603
0.11	604
0.12	605
0.13	606
0.15	607
0.16	608
0.18	609
0.20	610
0.22	611

ELECTROLYTIC CAPACITOR

0.47μF through 470μF
6.3WV through 50 (63, 100)WV

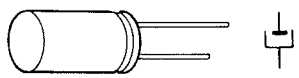

Parts No. 1-123-□□□-00

Value		Parts No. −□□□−
0.47μF	50V	
	100	379
1	50	
	100	380
2.2	50	
	100	381
3.3	25	
	35	
	50	
	100	382
4.7	25	
	35	
	50	
	63	369
10	10	
	16	
	25	
	35	
	50	356
22	16	
	25	330

Value		Parts No. −□□□−
22μF	35V	342
	50	
	63	371
33	6.3	
	10	
	16	318
	25	
	35	343
	50	
	63	372
47	6.3	
	10	306
	16	
	25	332
	35	
	50	359
100	6.3	
	10	307
	16	
	25	333
	35	345

Value		Parts No. −□□□−
100μF	50V	360
220	6.3	
	10	308
	16	321
	25	334
	35	346
	50	361
330	6.3	
	10	309
	16	322
	25	335
	35	347
	50	362
470	6.3	298
	10	310
	16	323
	25	336
	35	348
	50	
	63	377

Ref. No.	Part No.	Description
AC-A BOARD		
	A-6025-075-A	COMPLETE PCB, AC-A
⚠C1	1-115-148-00	PAPER 0.01 20% 450V
CN111	1-508-901-00	TOP TYPE RECEPTACLE, 3P MALE
⚠CN112	1-560-178-00	PWB RECEPTACLE, 6P
⚠CR1	1-231-341-00	CR PACK
D1	8-719-200-02	DIODE 10E-2
⚠R1	1-217-331-00	RES, WIRE 5.6 10% 7W
⚠RY1	1-515-388-21	RELAY, POWER, 12V/100mA
ARM-LED BOARD		
	1-603-611-00	PC BOARD, ARM LED
	8-719-922-02	DIODE BR2202S
ARM-POT BOARD		
	1-603-612-00	PC BOARD, ARM-POT
	1-806-123-00	PHOTO-POTENTIOMETER

Ref. No.	Part No.	Description
AUDIO-1 & 2 BOARD		
	A-6013-022-A	COMPLETE PCB, AUDIO 1 & 2 (NTSC, PM)
	A-6013-031-A	COMPLETE PCB, AUDIO 1 & 2 (PS)
C1	1-107-082-00	CAP, MICA 75PF 5% 50V
C1	1-107-089-00	CAP, MICA 150PF 5% 50V
C2	1-131-373-00	CAP, TANTALUM 22 10% 16V
C3	1-107-085-00	CAP, MICA 100PF 5% 50V
C4	1-107-102-00	CAP, MICA 5PF 5% 50V
C5	1-131-427-00	CAP, TANTALUM 220 20% 6.3V
C10	1-131-351-00	CAP, TANTALUM 4.7 10% 35V
C12	1-107-232-00	CAP, MICA 390PF 5% 50V
C13	1-107-093-00	CAP, MICA 220PF 5% 50V
C14	1-107-093-00	CAP, MICA 220PF 5% 50V
C15	1-131-366-00	CAP, TANTALUM 15 10% 20V
C16	1-107-073-00	CAP, MICA 33PF 5% 50V
C22	1-107-096-00	CAP, MICA 300PF 5% 50V
C25	1-131-351-00	CAP, TANTALUM 4.7 10% 35V
C28	1-131-380-00	CAP, TANTALUM 33 10% 10V
C31	1-131-365-00	CAP, TANTALUM 10 10% 20V
C32	1-131-365-00	CAP, TANTALUM 10 10% 20V
C36	1-107-073-00	CAP, MICA 33PF 5% 50V
C38	1-131-387-00	CAP, TANTALUM 47 10% 6.3V
C39	1-107-093-00	CAP, MICA 220PF 5% 50V
C40	1-107-093-00	CAP, MICA 220PF 5% 50V
C43	1-131-405-00	CAP, TANTALUM 0.33 10% 35V
C45	1-131-408-00	CAP, TANTALUM 1 10% 35V
C47	1-131-349-00	CAP, TANTALUM 2.2 10% 35V
C51	1-107-091-00	CAP, MICA 180PF 5% 50V
CHOICE	1-107-093-00	CAP, MICA 220PF 5% 50V
	1-107-095-00	CAP, MICA 270PF 5% 50V
	1-107-097-00	CAP, MICA 330PF 5% 50V
C55	1-107-082-00	CAP, MICA 75PF 5% 50V
CHOICE	1-107-089-00	CAP, MICA 150PF 5% 50V
C56	1-131-373-00	CAP, TANTALUM 22 10% 16V
C57	1-107-085-00	CAP, MICA 100PF 5% 50V
C58	1-107-102-00	CAP, MICA 5PF 5% 50V
C59	1-131-427-00	CAP, TANTALUM 220 20% 6.3V
C64	1-131-219-00	CAP, TANTALUM 4.7 10% 35V
C66	1-107-232-00	CAP, MICA 390PF 5% 50V
C67	1-107-093-00	CAP, MICA 220PF 5% 50V
C68	1-107-093-00	CAP, MICA 220PF 5% 50V
C69	1-131-366-00	CAP, TANTALUM 15 10% 20V
C70	1-107-073-00	CAP, MICA 33PF 5% 50V
C76	1-107-096-00	CAP, MICA 300PF 5% 50V
C79	1-131-351-00	CAP, TANTALUM 4.7 10% 35V
C82	1-131-380-00	CAP, TANTALUM 33 10% 10V
C85	1-131-365-00	CAP, TANTALUM 10 10% 20V
C86	1-131-365-00	CAP, TANTALUM 10 10% 20V

Ref. No.	Part No.	Description
C90	1-107-073-00	CAP, MICA 33PF 5% 50V
C92	1-131-387-00	CAP, TANTALUM 47 10% 6.3V
C93	1-107-093-00	CAP, MICA 220PF 5% 50V
C94	1-107-093-00	CAP, MICA 220PF 5% 50V
C97	1-131-405-00	CAP, TANTALUM 0.33 10% 35V
C99	1-131-408-00	CAP, TANTALUM 1 10% 35V
C101	1-131-349-00	CAP, TANTALUM 2.2 10% 35V
C105	1-107-091-00	CAP, MICA 180PF 5% 50V
	1-107-093-00	CAP, MICA 220PF 5% 50V
CHOICE	1-107-095-00	CAP, MICA 270PF 5% 50V
	1-107-097-00	CAP, MICA 330PF 5% 50V
C111	1-107-073-00	CAP, MICA 33PF 5% 50V
C112	1-107-073-00	CAP, MICA 33PF 5% 50V
C115	1-107-081-00	CAP, MICA 68PF 5% 50V
	1-107-083-00	CAP, MICA 82PF 5% 50V
	1-107-085-00	CAP, MICA 100PF 5% 50V
	1-107-088-00	CAP, MICA 130PF 5% 50V
CHOICE	1-107-089-00	CAP, MICA 150PF 5% 50V
	1-107-091-00	CAP, MICA 180PF 5% 50V
	1-107-093-00	CAP, MICA 220PF 5% 50V
	1-107-095-00	CAP, MICA 270PF 5% 50V
C118	1-107-081-00	CAP, MICA 68PF 5% 50V
	1-107-083-00	CAP, MICA 82PF 5% 50V
	1-107-085-00	CAP, MICA 100PF 5% 50V
	1-107-088-00	CAP, MICA 130PF 5% 50V
CHOICE	1-107-089-00	CAP, MICA 150PF 5% 50V
	1-108-091-00	CAP, MICA 180PF 5% 50V
	1-107-093-00	CAP, MICA 220PF 5% 50V
	1-107-095-00	CAP, MICA 270PF 5% 50V
C120	1-131-404-00	CAP, TANTALUM 0.22 10% 35V
C121	1-131-404-00	CAP, TANTALUM 0.22 10% 35V
D1	8-719-815-55	DIODE 1S1555
D2	8-719-815-55	DIODE 1S1555
D3	8-719-815-55	DIODE 1S1555
D4	8-719-815-55	DIODE 1S1555
IC1	8-750-461-00	IC CX-0461; SONY
IC2	8-750-461-00	IC CX-0461; SONY
L1	1-407-498-00	INDUCTOR MICRO 3.3mH
L3	1-407-498-00	INDUCTOR MICRO 3.3mH
L4	1-407-270-00	INDUCTOR, VAR 3.3mH
L5	1-407-498-00	INDUCTOR MICRO 3.3mH
L7	1-407-498-00	INDUCTOR MICRO 3.3mH
L8	1-407-270-00	INDUCTOR, VAR 3.3mH
L9	1-407-168-XX	INDUCTOR MICRO 82
L10	1-407-168-XX	INDUCTOR MICRO 82
L11	1-407-184-XX	INDUCTOR MICRO 3.3
L12	1-407-184-XX	INDUCTOR MICRO 3.3
Q1	8-723-304-00	TRANSISTOR 2SK43-4
Q2	8-765-493-00	TRANSISTOR 2SC2014
Q3	8-761-622-00	TRANSISTOR 2SC1636
Q4	8-729-665-47	TRANSISTOR 2SC1362
Q5	8-729-665-47	TRANSISTOR 2SC1362
Q6	8-729-663-47	TRANSISTOR 2SC1364
Q7	8-729-663-47	TRANSISTOR 2SC1364
Q8	8-729-665-47	TRANSISTOR 2SC1362
Q9	8-729-612-77	TRANSISTOR 2SC1027R
Q10	8-729-612-77	TRANSISTOR 2SC1027R
Q11	8-723-303-20	TRANSISTOR 2SK43-3A
Q12	8-723-304-00	TRANSISTOR 2SK43-4
Q13	8-729-663-47	TRANSISTOR 2SC1364
Q14	8-761-622-00	TRANSISTOR 2SC1636
Q15	8-729-612-77	TRANSISTOR 2SA1027R
Q16	8-729-663-47	TRANSISTOR 2SC1364
Q17	8-723-304-00	TRANSISTOR 2SK43-4
Q18	8-723-304-00	TRANSISTOR 2SK43-4
Q19	8-729-663-47	TRANSISTOR 2SC1364
Q20	8-729-612-77	TRANSISTOR 2SA1027R
Q21	8-761-622-00	TRANSISTOR 2SC1636
Q22	8-723-304-00	TRANSISTOR 2SK43-4
Q23	8-765-493-00	TRANSISTOR 2SC2014
Q24	8-761-622-00	TRANSISTOR 2SC1636
Q25	8-729-665-47	TRANSISTOR 2SC1362
Q26	8-729-665-47	TRANSISTOR 2SC1362
Q27	8-729-663-47	TRANSISTOR 2SC1364
Q28	8-729-663-47	TRANSISTOR 2SC1364
Q29	8-729-665-47	TRANSISTOR 2SC1362
Q30	8-729-612-77	TRANSISTOR 2SA1027R
Q31	8-729-612-77	TRANSISTOR 2SA1027R
Q32	8-723-303-20	TRANSISTOR 2SK43-3A
Q33	8-723-304-00	TRANSISTOR 2SK43-4
Q34	8-729-663-47	TRANSISTOR 2SC1364
Q35	8-761-612-00	TRANSISTOR 2SC1636
Q36	8-729-612-77	TRANSISTOR 2SA1027R
Q37	8-729-663-47	TRANSISTOR 2SC1364
Q38	8-723-304-00	TRANSISTOR 2SK43-4
Q39	8-723-304-00	TRANSISTOR 2SK43-4
Q40	8-729-663-47	TRANSISTOR 2SC1364
Q41	8-729-612-77	TRANSISTOR 2SA1027R
Q42	8-761-622-00	TRANSISTOR 2SC1636

Ref. No.	Part No.	Description
R11	1-224-946-00	RES, VAR, METAL 500
R57	1-224-937-00	RES, VAR, METAL 1K
R66	1-224-950-00	RES, VAR, METAL 10K
R67	1-224-940-00	RES, VAR, METAL 10K
R70	1-224-950-00	RES, VAR, METAL 10K
R96	1-224-946-00	RES, VAR, METAL 500
R141	1-224-937-00	RES, VAR, METAL 1K
R150	1-224-950-00	RES, VAR, METAL 10K
R151	1-224-940-00	RES, VAR, METAL 10K
R154	1-224-950-00	RES, VAR, METAL 10K
TH1	1-800-200-00	THERMISTOR, S-3K
TH2	1-800-200-00	THERMISTOR, S-3K

AUDIO-3 BOARD

	A-6013-026-A	COMPLETE PCB, AUDIO-3 (NTSC, PM)
	A-6013-027-A	COMPLETE PCB, AUDIO-3 (PS A4)
	A-6013-032-A	COMPLETE PCB, AUDIO-3 (PS NO-A4)
C2	1-131-387-00	CAP, TANTALUM 47 10% 6.3V
C4	1-131-427-00	CAP, TANTALUM 220 20% 6.3V
C5	1-131-427-00	CAP, TANTALUM 220 20% 6.3V
C6	1-107-061-00	CAP, MICA 10PF 5% 50V
C9	1-131-366-00	CAP, TANTALUM 15 10% 20V
C12	1-131-365-00	CAP, TANTALUM 10 10% 20V
C14	1-107-234-00	CAP, MICA 470PF 5% 50V
C19	1-131-406-00	CAP, TANTALUM 0.47 10% 35V (NTSC, PM)
C19	1-131-351-00	CAP, TANTALUM 4.7 10% 35V (PS)
C26	1-107-093-00	CAP, MICA 220PF 5% 50V
C27	1-107-093-00	CAP, MICA 220PF 5% 50V
C28	1-131-387-00	CAP, TANTALUM 47 10% 6.3V
C29	1-107-073-00	CAP, MICA 33PF 5% 50V
C30	1-107-065-00	CAP, MICA 15PF 5% 50V
C33	1-131-380-00	CAP, TANTALUM 33 10% 10V
C36	1-131-365-00	CAP, TANTALUM 10 10% 20V
C37	1-131-365-00	CAP, TANTALUM 10 10% 20V
C41	1-107-073-00	CAP, MICA 33PF 5% 50V
C44	1-107-093-00	CAP, MICA 220PF 5% 50V
C45	1-107-093-00	CAP, MICA 220PF 5% 50V
C46	1-131-387-00	CAP, TANTALUM 47 10% 6.3V
C65	1-107-085-00	CAP, MICA 100PF 5% 50V
C66	1-131-387-00	CAP, TANTALUM 47 10% 6.3V
C70	1-131-352-00	CAP, TANTALUM 6.8 10% 35V
C77	1-131-366-00	CAP, TANTALUM 15 10% 20V
C80	1-131-404-00	CAP, TANTALUM 0.22 10% 35V
C120	1-108-609-00	CAP, MYLAR 0.18 5% 50V (NTSC, PM)
C120	1-131-349-00	CAP, TANTALUM 2.2 10% 35V (PS)
D1	8-719-815-55	DIODE 1S1555
D2	8-719-815-55	DIODE 1S1555
D3	8-719-815-55	DIODE 1S1555
D4	8-719-815-55	DIODE 1S1555
D5	8-719-815-55	DIODE 1S1555
IC1	8-750-461-00	IC CX-0461
L1	1-407-497-00	INDUCTOR MICRO 2.7mH
L3	1-407-171-XX	INDUCTOR MICRO 150
L4	1-407-184-XX	INDUCTOR MICRO 3.3
Q1	8-723-304-00	TRANSISTOR 2SK43-4
Q2	8-723-304-00	TRANSISTOR 2SK43-4
Q3	8-729-354-52	TRANSISTOR 2SC2545
Q4	8-761-622-00	TRANSISTOR 2SC1636
Q5	8-723-304-00	TRANSISTOR 2SK43-4
Q6	8-729-665-47	TRANSISTOR 2SC1362
Q7	8-729-665-47	TRANSISTOR 2SC1362
Q8	8-729-665-47	TRANSISTOR 2SC1362
Q9	8-729-665-47	TRANSISTOR 2SC1362
Q10	8-761-622-00	TRANSISTOR 2SC1636
Q11	8-761-622-00	TRANSISTOR 2SC1636
Q12	8-761-622-00	TRANSISTOR 2SC1636
Q13	8-729-665-47	TRANSISTOR 2SC1362
Q14	8-729-612-77	TRANSISTOR 2SA1027R
Q15	8-761-622-00	TRANSISTOR 2SC1636
Q16	8-729-663-47	TRANSISTOR 2SC1364
Q17	8-729-612-77	TRANSISTOR 2SA1027R
Q18	8-761-622-00	TRANSISTOR 2SC1636
Q19	8-729-612-77	TRANSISTOR 2SA1027R
Q20	8-729-663-47	TRANSISTOR 2SC1364

Ref. No.	Part No.	Description
Q21	8-723-304-00	TRANSISTOR 2SK43-4
Q22	8-723-304-00	TRANSISTOR 2SK43-4
Q23	8-729-663-47	TRANSISTOR 2SC1364
Q24	8-729-612-77	TRANSISTOR 2SA1027R
Q25	8-761-622-00	TRANSISTOR 2SC1636
Q26	8-729-663-47	TRANSISTOR 2SC1364
Q27	8-729-663-47	TRANSISTOR 2SC1364
Q28	8-729-663-47	TRANSISTOR 2SC1364
Q29	8-761-622-00	TRANSISTOR 2SC1636
Q30	8-761-622-00	TRANSISTOR 2SC1636
Q31	8-761-622-00	TRANSISTOR 2SC1636
Q32	8-729-663-47	TRANSISTOR 2SC1364
Q33	8-723-304-00	TRANSISTOR 2SK43-4
Q34	8-729-663-47	TRANSISTOR 2SC1364
Q35	8-723-304-00	TRANSISTOR 2SK43-4
Q36	8-761-622-00	TRANSISTOR 2SC1636
Q37	8-723-303-20	TRANSISTOR 2SK43-3A
Q38	8-729-612-77	TRANSISTOR 2SA1027R
Q39	8-729-665-47	TRANSISTOR 2SC1362
Q40	8-723-304-00	TRANSISTOR 2SK43-4
R12	1-224-947-00	RES, VAR, METAL 1K
R53	1-224-950-00	RES, VAR, METAL 10K
R54	1-224-950-00	RES, VAR, METAL 10K
R55	1-224-943-00	RES, VAR, METAL 100K
R104	1-224-940-00	RES, VAR, METAL 10K
R189	1-224-949-00	RES, VAR, METAL 5K
R190	1-224-949-00	RES, VAR, METAL 5K
TH1	1-800-200-00	THERMISTOR, S-3K

AUDIO-4 BOARD (FOR PS AUDIO-4)

Ref. No.	Part No.	Description
	A-6013-028-B	COMPLETE PCB, AUDIO-4
	1-561-044-00	PLUG, SHORT, 3P
	1-561-146-00	PLUG HOUSING, 2P, MALE
	1-535-243-21	CONTACT, FEMALE
C1	1-107-091-00	CAP, MICA 180PF 5% 50V
C4	1-131-427-00	CAP, TANTALUM 220 20% 6.3V
C12	1-109-549-00	CAP, MICA 390PF 5% 100V
C15	1-107-088-00	CAP, MICA 130PF 5% 50V
C16	1-107-088-00	CAP, MICA 130PF 5% 50V
C23	1-107-093-00	CAP, MICA 220PF 5% 50V
C24	1-131-351-00	CAP, TANTALUM 4.7 10% 35V
C25	1-131-348-00	CAP, TANTALUM 1.5 10% 35V
C29	1-109-559-00	CAP, MICA 820PF 5% 100V
C34	1-109-551-00	CAP, MICA 440PF 5% 100V
C40	1-131-351-00	CAP, TANTALUM 4.7 10% 35V
C41	1-131-380-00	CAP, TANTALUM 33 10% 10V
C46	1-109-558-00	CAP, MICA 750PF 5% 100V
C49	1-131-408-00	CAP, TANTALUM 1 10% 35V
C53	1-131-349-00	CAP, TANTALUM 2.2 10% 35V
C54	1-131-380-00	CAP, TANTALUM 33 10% 10V
C55	1-131-348-00	CAP, TANTALUM 1.5 10% 35V
C58	1-131-406-00	CAP, TANTALUM 0.47 10% 35V
C59	1-109-635-00	CAP, MICA 680PF 2% 500V
C61	1-109-627-00	CAP, MICA 150PF 2% 500V
C63	1-131-349-00	CAP, TANTALUM 2.2 10% 35V
C65	1-107-085-00	CAP, MICA 100PF 5% 50V
C66	1-131-359-00	CAP, TANTALUM 10 10% 25V
C67	1-107-077-00	CAP, MICA 47PF 5% 50V
C68	1-131-406-00	CAP, TANTALUM 0.47 10% 35V
C76	1-131-393-00	CAP, TANTALUM 47 10% 3.15V
C77	1-131-348-00	CAP, TANTALUM 1.5 10% 35V
C80	1-131-408-00	CAP, TANTALUM 1 10% 35V
C81	1-109-587-00	CAP, MICA 0.0018 5% 500V
C82	1-141-155-00	CAP, TRIMMER 600PF
C83	1-109-627-00	CAP, MICA 150PF 2% 500V
C84	1-131-350-00	CAP, TANTALUM 3.3 10% 35V
D1	8-719-815-55	DIODE 1S1555
D2	8-719-200-02	DIODE 10E-2
D3	8-719-815-55	DIODE 1S1555
D4	8-719-111-07	DIODE RD11E-B
D5	8-719-815-55	DIODE 1S1555
D6	8-719-815-55	DIODE 1S1555
D7	8-719-115-07	DIODE RD15E-B
D8	8-719-115-07	DIODE RD15E-B
D9	8-719-815-55	DIODE 1S1555
D10	8-719-200-02	DIODE 10E-2

Ref. No.	Part No.	Description
IC1	8-759-145-57	IC μPC4557C; NEC
IC2	8-759-145-57	IC μPC4557C; NEC
IC3	8-759-145-57	IC μPC4557C; NEC
IC4	8-759-921-91	IC TL191CN; TI
IC5	8-759-145-57	IC μPC4557C; NEC
IC6	8-759-921-91	IC TL191CN; TI
IC7	8-759-990-82	IC TL082CP; TI
L1	1-407-498-00	INDUCTOR MICRO 3.3mH
L2	1-407-270-00	INDUCTOR, VAR 3.3mH
L3	1-407-270-00	INDUCTOR, VAR 3.3mH
L4	1-407-176-XX	INDUCTOR MICRO 390
L5	1-407-286-00	INDUCTOR, VAR 2.2mH
L6	1-407-488-00	INDUCTOR MICRO 470
L7	1-407-488-00	INDUCTOR MICRO 470
L8	1-407-263-00	INDUCTOR MICRO 220
Q1	8-729-113-04	TRANSISTOR 2SK130A
Q2	8-729-113-04	TRANSISTOR 2SK130A
Q3	8-729-612-77	TRANSISTOR 2SA1027R
Q4	8-729-612-77	TRANSISTOR 2SA1027R
Q5	8-729-612-77	TRANSISTOR 2SA1027R
Q6	8-761-622-00	TRANSISTOR 2SC1636
Q7	8-729-612-77	TRANSISTOR 2SA1027R
Q8	8-729-612-77	TRANSISTOR 2SA1027R
Q9	8-729-612-77	TRANSISTOR 2SA1027R
Q10	8-725-412-00	TRANSISTOR 2SC1124
Q11	8-725-412-00	TRANSISTOR 2SC1124
Q12	8-761-622-00	TRANSISTOR 2SC1636
Q13	8-765-020-00	TRANSISTOR 2SA884
Q14	8-765-020-00	TRANSISTOR 2SA884
Q15	8-765-222-20	TRANSISTOR 2SC1963
Q16	8-761-622-00	TRANSISTOR 2SC1636
Q17	8-729-316-23	TRANSISTOR 2SC1162
Q18	8-761-622-00	TRANSISTOR 2SC1636
Q19	8-729-371-53	TRANSISTOR 2SA715
Q20	8-729-612-77	TRANSISTOR 2SA1027R
Q21	8-725-412-00	TRANSISTOR 2SC1124
Q22	8-725-412-00	TRANSISTOR 2SC1124
Q23	8-729-612-77	TRANSISTOR 2SA1027R
Q24	8-729-612-77	TRANSISTOR 2SA1027R
R7	1-224-946-00	RES, VAR, METAL 500
R34	1-224-940-00	RES, VAR, METAL 10K
R40	1-224-937-00	RES, VAR, METAL 1K
R47	1-224-937-00	RES, VAR, METAL 1K
R52	1-224-940-00	RES, VAR, METAL 10K

Ref. No.	Part No.	Description
R63	1-224-948-00	RES, VAR, METAL 2K
R74	1-224-951-00	RES, VAR, METAL 20K
R95	1-224-945-00	RES, VAR, METAL 200
R105	1-224-934-00	RES, VAR, METAL 100
R144	1-224-940-00	RES, VAR, METAL 10K
RY1	1-515-309-21	RELAY, 12V/1kΩ
RY2	1-515-309-21	RELAY, 12V/1kΩ
SW1	1-508-742-00	TOP TYPE RECEPTACLE, 3P, MALE
SW2	1-508-742-00	TOP TYPE RECEPTACLE, 3P, MALE
T1	1-433-196-00	TRANSFORMER, BIAS
T2	1-433-196-00	TRANSFORMER, BIAS
TH1	1-800-200-00	THERMISTOR, S-3K
TH2	1-800-200-00	THERMISTOR, S-3K

A4-AUX BOARD (FOR PS AUDIO-4)

	A-6025-064-A	COMPLETE PCB, A4 AUX
R1	1-244-868-00	RES, CARBON 620 5% 1/2W
R2	1-244-868-00	RES, CARBON 620 5% 1/2W
R3	1-244-868-00	RES, CARBON 620 5% 1/2W
R4	1-244-868-00	RES, CARBON 620 5% 1/2W
T1	1-423-189-00	TRANSFORMER, INPUT

AUDIO AUX BOARD

Ref. No.	Part No.	Description
	A-6025-019-B	COMPLETE PCB, AUDIO AUX
C1	1-131-373-00	CAP, TANTALUM 22 10% 16V
CN381	1-508-845-00	TOP TYPE RECEPTACLE, 6P, MALE
CN382	1-508-736-00	SIDE TYPE RECEPTACLE, 10P, MALE
R1	1-244-868-00	RES, CARBON 620 5% 1/2W
R3	1-244-868-00	RES, CARBON 620 5% 1/2W
R5	1-244-868-00	RES, CARBON 620 5% 1/2W
R8	1-244-868-00	RES, CARBON 620 5% 1/2W
R9	1-244-868-00	RES, CARBON 620 5% 1/2W
R10	1-244-868-00	RES, CARBON 620 5% 1/2W
R11	1-244-868-00	RES, CARBON 620 5% 1/2W
R12	1-244-868-00	RES, CARBON 620 5% 1/2W
R13	1-244-868-00	RES, CARBON 620 5% 1/2W
R14	1-244-868-00	RES, CARBON 620 5% 1/2W
R15	1-244-868-00	RES, CARBON 620 5% 1/2W
R16	1-244-868-00	RES, CARBON 620 5% 1/2W
T1	1-423-189-00	TRANSFORMER, INPUT
T2	1-423-189-00	TRANSFORMER, INPUT
T3	1-423-189-00	TRANSFORMER, INPUT
T4	1-423-226-00	TRANSFORMER, INPUT/OUTPUT

AUDIO LOGIC BOARD (NTSC, PM)

Ref. No.	Part No.	Description
	A-6017-036-A	COMPLETE PCB, AUDIO LOGIC
C1	1-131-402-00	CAP, TANTALUM 0.1 10% 35V
C4	1-131-402-00	CAP, TANTALUM 0.1 10% 35V
C9	1-131-402-00	CAP, TANTALUM 0.1 10% 35V
C12	1-131-402-00	CAP, TANTALUM 0.1 10% 35V
C13	1-131-402-00	CAP, TANTALUM 0.1 10% 35V
C15	1-131-402-00	CAP, TANTALUM 0.1 10% 35V
C17	1-161-036-00	CAP, CERAMIC 0.047 20% 25V
C19	1-161-036-00	CAP, CERAMIC 0.047 20% 25V
C30	1-161-036-00	CAP, CERAMIC 0.047 20% 25V
C31	1-161-036-00	CAP, CERAMIC 0.047 20% 25V
C32	1-161-036-00	CAP, CERAMIC 0.047 20% 25V
C33	1-161-036-00	CAP, CERAMIC 0.047 20% 25V
C34	1-161-036-00	CAP, CERAMIC 0.047 20% 25V
C35	1-161-036-00	CAP, CERAMIC 0.047 20% 25V
C36	1-161-036-00	CAP, CERAMIC 0.047 20% 25V
C37	1-161-036-00	CAP, CERAMIC 0.047 20% 25V
C38	1-161-036-00	CAP, CERAMIC 0.047 20% 25V
C39	1-161-036-00	CAP, CERAMIC 0.047 20% 25V
C40	1-161-036-00	CAP, CERAMIC 0.047 20% 25V
C41	1-161-036-00	CAP, CERAMIC 0.047 20% 25V
C42	1-161-036-00	CAP, CERAMIC 0.047 20% 25V
C43	1-161-036-00	CAP, CERAMIC 0.047 20% 25V
C44	1-161-036-00	CAP, CERAMIC 0.047 20% 25V
C45	1-107-085-00	CAP, MICA 100PF 5% 50V
IC1	8-759-221-64	IC TC40H164, C-MOS; TOSHIBA
IC2	8-759-221-64	IC TC40H164, C-MOS; TOSHIBA
IC3	8-759-221-64	IC TC40H164, C-MOS; TOSHIBA
IC4	8-759-221-64	IC TC40H164, C-MOS; TOSHIBA
IC5	8-759-221-64	IC TC40H164, C-MOS; TOSHIBA
IC6	8-759-045-38	IC MC14538BCP, C-MOS; MOTOROLA
IC7	8-759-240-25	IC TC4025BP, C-MOS (CD4025BE; RCA)
IC8	8-759-240-11	IC TC4011BP, C-MOS (CD4011BE; RCA)
IC10	8-759-221-64	IC TC40H164, C-MOS; TOSHIBA
IC12	8-759-221-64	IC TC40H164, C-MOS; TOSHIBA
IC13	8-759-221-64	IC TC40H164, C-MOS; TOSHIBA
IC14	8-759-240-01	IC TC4001BP, C-MOS (CD4001BE; RCA)
IC15	8-759-240-11	IC TC4011BP, C-MOS (CD4011BE; RCA)
IC16	8-759-240-49	IC TC4049BP, C-MOS (CD4049BE; RCA)
IC17	8-759-240-49	IC TC4049BP, C-MOS (CD4049BE; RCA)
IC18	8-759-240-75	IC TC4075BP, C-MOS (CD4075BE; RCA)
IC19	8-759-240-01	IC TC4001BP, C-MOS (CD4001BE; RCA)
IC20	8-759-240-49	IC TC4049BP, C-MOS (CD4049BE; RCA)
IC22	8-759-240-71	IC TC4071BP, C-MOS (CD4071BE; RCA)
IC23	8-759-240-23	IC TC4023BP, C-MOS (CD4023BE, RCA)

Ref. No.	Part No.	Description
IC24	8-759-240-15	IC TC4015BP, C-MOS (CD4015BE; RCA)
IC25	8-759-240-15	IC TC4015BP, C-MOS (CD4015BE; RCA)
IC26	8-759-240-13	IC TC4013BP, C-MOS (CD4013BE; RCA)
IC27	8-759-240-71	IC TC4071BP, C-MOS (CD4071BE; RCA)
IC28	8-759-240-13	IC TC4013BP, C-MOS (CD4013BE; RCA)
IC30	8-759-240-01	IC TC4001BP, C-MOS (CD4001BE; RCA)
IC31	8-759-040-70	IC MC14070BCP, C-MOS; MOTOROLA
IC32	8-759-240-13	IC TC4013BP, C-MOS (CD4013BE; RCA)
IC33	8-759-240-49	IC TC4049BP, C-MOS (CD4049BE; RCA)
IC34	8-759-240-49	IC TC4049BP, C-MOS (CD4049BE; RCA)
IC35	8-759-632-06	IC M53206P, TTL (SN7406N; TI)
IC36	8-759-900-04	IC SN74LS04N, TTL; TI
IC37	8-759-632-06	IC M53206P, TTL (SN7406N; TI)
IC38	8-759-240-81	IC TC4081BP, C-MOS (CD4081BE; RCA)
IC39	8-759-045-38	IC MC14538BCP, C-MOS MOTOROLA
IC41	8-759-240-11	IC TC4011BP, C-MOS (CD4011BE; RCA)
IC42	8-759-240-11	IC TC4011BP, C-MOS (CD4011BE; RCA)
IC43	8-759-240-68	IC TC4068BP, C-MOS (CD4068BE; RCA)
IC44	8-759-240-50	IC TC4050BP, C-MOS (CD4050BE; RCA)
IC45	8-759-632-06	IC M53206P, TTL (SN7406N; TI)
IC46	8-759-240-71	IC TC4071BP, C-MOS (CD4071BE; RCA)
IC47	8-759-040-70	IC MC14070BCP, C-MOS; MOTOROLA
IC48	8-759-045-38	IC MC14538BCP, C-MOS; MOTOROLA
IC50	8-759-240-40	IC TC4049BP, C-MOS (CD4049BE; RCA)
IC51	8-759-974-07	IC SN7407N, TTL; TI
L1	1-409-309-00	COIL, TOROIDAL
Q1	8-729-663-47	TRANSISTOR 2SC1364
Q2	8-729-663-47	TRANSISTOR 2SC1364

Ref. No.	Part No.	Description
AUDIO LOGIC BOARD (PS)		
	A-6017-037-A	COMPLETE PCB, AUDIO LOGIC (WITHOUT A4)
	A-6017-049-A	COMPLETE PCB, AUDIO LOGIC (WITH A4)
C1	1-131-402-00	CAP, TANTALUM 0.1 10% 35V
C4	1-131-402-00	CAP, TANTALUM 0.1 10% 35V
C9	1-131-402-00	CAP, TANTALUM 0.1 10% 35V
C12	1-131-402-00	CAP, TANTALUM 0.1 10% 35V
C13	1-131-402-00	CAP, TANTALUM 0.1 10% 35V
C13	1-131-402-00	CAP, TANTALUM 0.1 10% 35V
C15	1-131-402-00	CAP, TANTALUM 0.1 10% 35V
C17	1-161-036-00	CAP, CERAMIC 0.047 20% 25V
C19	1-161-036-00	CAP, CERAMIC 0.047 20% 25V
C30	1-161-036-00	CAP, CERAMIC 0.047 20% 25V
C31	1-161-036-00	CAP, CERAMIC 0.047 20% 25V
C32	1-161-036-00	CAP, CERAMIC 0.047 20% 25V
C33	1-161-036-00	CAP, CERAMIC 0.047 20% 25V
C34	1-161-036-00	CAP, CERAMIC 0.047 20% 25V
C35	1-161-036-00	CAP, CERAMIC 0.047 20% 25V
C36	1-161-036-00	CAP, CERAMIC 0.047 20% 25V
C37	1-161-036-00	CAP, CERAMIC 0.047 20% 25V
C38	1-161-036-00	CAP, CERAMIC 0.047 20% 25V
C39	1-161-036-00	CAP, CERAMIC 0.047 20% 25V
C40	1-161-036-00	CAP, CERAMIC 0.047 20% 25V
C41	1-161-036-00	CAP, CERAMIC 0.047 20% 25V
C42	1-161-036-00	CAP, CERAMIC 0.047 20% 25V
C43	1-161-036-00	CAP, CERAMIC 0.047 20% 25V
C44	1-161-036-00	CAP, CERAMIC 0.047 20% 25V
C45	1-107-085-00	CAP, MICA 100PF 5% 50V
IC1	8-759-221-64	IC TC40H164, C-MOS; TOSHIBA
IC2	8-759-221-64	IC TC40H164, C-MOS; TOSHIBA
IC3	8-759-221-64	IC TC40H164, C-MOS; TOSHIBA
IC4	8-759-221-64	IC TC40H164, C-MOS; TOSHIBA
IC5	8-759-221-64	IC TC40H164, C-MOS; TOSHIBA
IC6	8-759-045-38	IC MC14538BCP, C-MOS; MOTOROLA
IC7	8-759-240-25	IC TC4025BP, C-MOS (CD4025BE; RCA)
IC8	8-759-240-11	IC TC4011BP, C-MOS (CD4011BE; RCA)
IC9	8-759-221-64	IC TC40H164, C-MOS; TOSHIBA
IC10	8-759-221-64	IC TC40H164, C-MOS; TOSHIBA
IC11	8-759-221-64	IC TC40H164, C-MOS; TOSHIBA
IC12	8-759-221-64	IC TC40H164, C-MOS; TOSHIBA
IC13	8-759-221-64	IC TC40H164, C-MOS; TOSHIBA
IC14	8-759-240-01	IC TC4001BP, C-MOS (CD4001BE; RCA)
IC15	8-759-240-11	IC TC4011BP, C-MOS (CD4011BE; RCA)

Ref. No.	Part No.	Description
IC16	8-759-240-49	IC TC4049BP, C-MOS (CD4049BE; RCA)
IC17	8-759-240-49	IC TC4049BP, C-MOS (CD4049BE; RCA)
IC18	8-759-240-75	IC TC4075BP, C-MOS (CD4075BE; RCA)
IC19	8-759-240-01	IC TC4001BP, C-MOS (CD4001BE; RCA)
IC20	8-759-240-49	IC TC4049BP, C-MOS (CD4049BE; RCA)
IC21	8-759-240-01	IC TC4001BP, C-MOS (CD4001BE; RCA)
IC22	8-759-240-71	IC TC4071BP, C-MOS (CD4071BE; RCA)
IC23	8-759-240-23	IC TC4023BP, C-MOS (CD4023BE; RCA)
IC24	8-759-240-15	IC TC4015BP, C-MOS (CD4015BE; RCA)
IC25	8-759-240-15	IC TC4015BP, C-MOS (CD4015BE; RCA)
IC26	8-759-240-13	IC TC4013BP, C-MOS (CD4013BE; RCA)
IC27	8-759-240-71	IC TC4071BP, C-MOS (CD4071BE; RCA)
IC28	8-759-240-13	IC TC4013BP, C-MOS (CD4013BE; RCA)
IC29	8-759-240-68	IC TC4068BP, C-MOS (CD4068BE; RCA)
IC30	8-759-240-01	IC TC4001BP, C-MOS (CD4001BE; RCA)
IC31	8-759-040-70	IC MC14070BCP, C-MOS; MOTOROLA
IC32	8-759-240-13	IC TC4013BP, C-MOS (CD4013BE; RCA)
IC33	8-759-240-49	IC TC4049BP, C-MOS (CD4049BE; RCA)
IC34	8-759-240-49	IC TC4049BP, C-MOC (CD4049BE; RCA)
IC35	8-759-632-06	IC M53206P, TTL (SN7406N; TI)
IC36	8-759-900-04	IC SN74LS04N, TTL; TI
IC37	8-759-632-06	IC M53206P, TTL (SN7406N; TI)
IC38	8-759-240-81	IC TC4081BP, C-MOS (CD4081BE; RCA)
IC39	8-759-045-38	IC MC14538BCP, C-MOS; MOTOROLA
IC40	8-759-240-01	IC TC4001BP, C-MOS (CD4001BE; RCA)
IC41	8-759-240-11	IC TC4011BP, C-MOS (CD4011BE; RCA)
IC42	8-759-240-11	IC TC4011BP, C-MOS (CD4011BE; RCA)
IC43	8-759-240-68	IC TC4068BP, C-MOS (CD4068BE; RCA)
IC44	8-759-240-50	IC TC4050BP, C-MOS (CD4050BE; RCA)
IC45	8-759-632-06	IC M53206P, TTL (SN7406N; TI)
IC46	8-759-240-71	IC TC4071BP, C-MOS (CD4071BE; RCA)
IC47	8-759-040-70	IC MC14070BCP, C-MOS; MOTOROLA
IC48	8-759-045-38	IC MC14538BCP, C-MOS; MOTOROLA
IC49	8-759-240-11	IC TC4011BP, C-MOS (CD4011BE; RCA)
IC50	8-759-240-49	IC TC4049BP, C-MOS (CD4049BE; RCA)
IC51	8-759-974-07	IC SN7407N, TTL; TI
L1	1-409-309-00	COIL, TOROIDAL
Q1	8-729-663-47	TRANSISTOR 2SC1364
Q2	8-729-663-47	TRANSISTOR 2SC1364
S1	1-552-096-00	SWITCH, SLIDE
S2	1-516-925-21	SWITCH, DIP (8-CKT)

AUDIO SELECT BOARD

A-6025-067-A	COMPLETE PCB, AUDIO SELECT (U/C, PS, PM)
A-6025-068-A	COMPLETE PCB, AUDIO SELECT (JAPAN)

C1	1-131-359-00	CAP, TANTALUM 10 10% 25V
C2	1-131-359-00	CAP, TANTALUM 10 10% 25V
C3	1-131-359-00	CAP, TANTALUM 10 10% 25V
C4	1-131-359-00	CAP, TANTALUM 10 10% 25V

Ref. No.	Part No.	Description
CN392	1-508-736-00	SIDE TYPE RECEPTACLE, 10P, MALE
CN393	1-508-736-00	SIDE TYPE RECEPTACLE, 10P, MALE
D1	**8-719-815-55**	**DIODE 1S1555**
D2	**8-719-815-55**	**DIODE 1S1555**
D3	**8-719-815-55**	**DIODE 1S1555**
D4	**8-719-815-55**	**DIODE 1S1555**
Q1	**8-765-170-01**	**TRANSISTOR 2SC1962**
Q2	**8-762-020-00**	**TRANSISTOR 2SA835**
Q3	**8-765-170-01**	**TRANSISTOR 2SC1962**
Q4	**8-762-020-00**	**TRANSISTOR 2SA835**
R6	**1-213-125-00**	**RES, METAL 33 5% 1W (U/C, PS, PM)**
R6	**1-213-126-00**	**RES, METAL 39 5% 1W (JAPAN)**
R12	**1-213-125-00**	**RES, METAL 33 5% 1W (U/C, PS, PM)**
R12	**1-213-126-00**	**RES, METAL 39 5% 1W (JAPAN)**
SW1	**1-552-068-00**	**SWITCH, PUSH**
SW2	**1-552-685-00**	**SWITCH, SLIDE**

BD BOARD

	A-6023-025-B	COMPLETE PCB, BD
C1	**1-109-676-00**	**CAP, MICA 130PF 5% 500V**
C2	**1-131-351-00**	**CAP, TANTALUM 4.7 10% 35V**
C3	**1-131-351-00**	**CAP, TANTALUM 4.7 10% 35V**
C4	**1-161-743-00**	**CAP, CERAMIC 0.0047 400V**
C5	**1-161-743-00**	**CAP, CERAMIC 0.0047 400V**
C6	**1-161-047-00**	**CAP, CERAMIC 0.0047 10% 50V**
C7	**1-161-047-00**	**CAP, CERAMIC 0.0047 10% 50V**
C8	**1-101-005-00**	**CAP, CERAMIC 0.022 10% 50V**
C9	**1-161-047-00**	**CAP, CERAMIC 0.0047 10% 50V**
C10	**1-161-047-00**	**CAP, CERAMIC 0.0047 10% 50V**

Ref. No.	Part No.	Description
C11	**1-101-005-00**	**CAP, CERAMIC 0.022 10% 50V**
C12	**1-161-047-00**	**CAP, CERAMIC 0.0047 10% 50V**
C13	**1-161-047-00**	**CAP, CERAMIC 0.0047 10% 50V**
C14	**1-101-821-00**	**CAP, CERAMIC 0.0022 500V**
CN261	1-508-935-00	SIDE TYPE RECEPTACLE, 5P, MALE
CN262	1-508-903-00	TOP TYPE RECEPTACLE, 5P, MALE
CN263	1-508-901-00	TOP TYPE RECEPTACLE, 3P, MALE
CN264	1-508-901-00	TOP TYPE RECEPTACLE, 3P, MALE
D1	**8-719-815-55**	**DIODE 1S1555**
D2	**8-719-815-55**	**DIODE 1S1555**
D3	**8-719-815-55**	**DIODE 1S1555**
D4	**8-719-815-55**	**DIODE 1S1888**
IC1	**8-759-374-58**	**IC HA17458GS (LM1458N; NSC)**
L1	**1-407-173-XX**	**INDUCTOR MICRO 220**
L2	**1-407-173-XX**	**INDUCTOR MICRO 220**
L3	**1-407-173-XX**	**INDUCTOR MICRO 220**
L4	**1-407-173-XX**	**INDUCTOR MICRO 220**
L5	**1-407-167-XX**	**INDUCTOR MICRO 68**
L6	**1-407-167-XX**	**INDUCTOR MICRO 68**
Q1	**8-765-141-00**	**TRANSISTOR 2SA911**
Q2	**8-765-141-00**	**TRANSISTOR 2SA911**
Q3	**8-763-420-00**	**TRANSISTOR 2SC1762**
Q4	**8-763-420-00**	**TRANSISTOR 2SC1762**
Q5	**8-763-420-00**	**TRANSISTOR 2SC1762**
Q6	**8-763-420-00**	**TRANSISTOR 2SC1762**
Q7	**8-763-420-00**	**TRANSISTOR 2SC1762**
Q8	**8-765-141-00**	**TRANSISTOR 2SA911**
Q9	**8-765-141-00**	**TRANSISTOR 2SA911**
Q10	**8-765-141-00**	**TRANSISTOR 2SA911**
Q11	**8-729-663-47**	**TRANSISTOR 2SC1364**
Q12	**8-729-384-48**	**TRANSISTOR 2SA844**
Q13	**8-729-663-47**	**TRANSISTOR 2SC1364**
Q14	**8-729-384-48**	**TRANSISTOR 2SA844**
R9	**1-244-925-00**	**RES, CARBON 150K 5% 1/2W**
R10	**1-244-925-00**	**RES, CARBON 150K 5% 1/2W**
R14	**1-244-925-00**	**RES, CARBON 150K 5% 1/2W**
⚠ **R26**	**1-206-652-00**	**RES, METAL 330 5% 2W**

BIAS BOARD

Ref. No.	Part No.	Description
	A-6013-020-A	COMPLETE PCB, BIAS (NTSC, PM)
	A-6013-021-A	COMPLETE PCB, BIAS (PS)
C5	1-109-633-00	CAP, MICA 470PF 2% 500V
CHOICE	1-109-636-00	CAP, MICA 750PF 2% 500V
	1-109-637-00	CAP, MICA 0.001 2% 500V
	1-109-638-00	CAP, MICA 0.0012 2% 500V
C6	1-141-155-00	CAP, TRIMMER 600PF
C8	1-131-351-00	CAP, TANTALUM 4.7 10% 35V
C9	1-131-349-00	CAP, TANTALUM 2.2 10% 35V
C14	1-109-635-00	CAP, MICA 680PF 2% 500V
C15	1-106-178-00	CAP, MYLAR 0.0018 5% 100V
CHOICE	1-106-180-00	CAP, MYLAR 0.0022 5% 100V
	1-106-182-00	CAP, MYLAR 0.0027 5% 100V
C19	1-109-629-00	CAP, MICA 220PF 2% 500V
CHOICE	1-109-633-00	CAP, MICA 470PF 2% 500V
	1-109-635-00	CAP, MICA 680PF 2% 500V
C20	1-141-155-00	CAP, TRIMMER 600PF
C22	1-131-351-00	CAP, TANTALUM 4.7 10% 35V
C23	1-131-349-00	CAP, TANTALUM 2.2 10% 35V
C28	1-109-635-00	CAP, MICA 680PF 2% 500V
C29	1-106-178-00	CAP, MYLAR 0.0018 5% 100V
CHOICE	1-106-180-00	CAP, MYLAR 0.0022 5% 100V
	1-106-182-00	CAP, MYLAR 0.0027 5% 100V
C30	1-131-348-00	CAP, TANTALUM 1.5 10% 35V
C31	1-131-348-00	CAP, TANTALUM 1.5 10% 35V
C33	1-131-349-00	CAP, TANTALUM 2.2 10% 35V
C34	1-131-349-00	CAP, TANTALUM 2.2 10% 35V
C36	1-131-351-00	CAP, TANTALUM 4.7 10% 35V
C37	1-131-349-00	CAP, TANTALUM 2.2 10% 35V
C42	1-109-639-00	CAP, MICA 0.0015 2% 500V
C43	1-106-178-00	CAP, MYLAR 0.0018 5% 100V
CHOICE	1-106-180-00	CAP, MYLAR 0.0022 5% 100V
	1-106-182-00	CAP, MYLAR 0.0027 5% 100V
C44	1-109-633-00	CAP, MICA 470PF 2% 500V
C46	1-109-633-00	CAP, MICA 470PF 2% 500V
C48	1-109-641-00	CAP, MICA 0.0022 2% 500V
C49	1-107-081-00	CAP, MICA 68PF 5% 50V
C50	1-107-081-00	CAP, MICA 68PF 5% 50V
C53	1-131-349-00	CAP, TANTALUM 2.2 10% 35V
C54	1-131-349-00	CAP, TANTALUM 2.2 10% 35V
C57	1-131-349-00	CAP, TANTALUM 2.2 10% 35V
C58	1-109-638-00	CAP, MICA 0.0012 2% 500V

Ref. No.	Part No.	Description
C58	1-109-638-00	CAP, MICA 0.0012 2% 500V
CHOICE	1-109-639-00	CAP, MICA 0.0015 2% 500V
	1-109-703-00	CAP, MICA 0.0018 5% 500V
C59	1-141-155-00	CAP, TRIMMER 600PF
C66	1-109-627-00	MICA 150PF 2% 500V
C68	1-131-380-00	CAP, TANTALUM 33 10% 10V
C69	1-131-380-00	CAP, TANTALUM 33 10% 10V
C70	1-109-627-00	CAP, MICA 150PF 2% 500V
C71	1-109-625-00	CAP, MICA 75PF 2% 500V
C72	1-109-627-00	CAP, MICA 150PF 2% 500V
C73	1-109-627-00	CAP, MICA 150PF 2% 500V
C74	1-109-627-00	CAP, MICA 150PF 2% 500V
C75	1-131-349-00	CAP, TANTALUM 2.2 10% 35V
C76	1-106-172-00	CAP, MYLAR 0.001 5% 100V
C77	1-106-172-00	CAP, MYLAR 0.001 5% 100V
C78	1-106-180-00	CAP, MYLAR 0.0022 5% 100V
C79	1-106-180-00	CAP, MYLAR 0.0022 5% 100V
C80	1-131-373-00	CAP, TANTALUM 22 10% 16V (NTSC, PM)
C80	1-131-349-00	CAP, TANTALUM 47 10% 6.3V (PS)
C81	1-109-627-00	CAP, MICA 150PF 2% 500V
C82	1-109-627-00	CAP, MICA 150PF 2% 500V
D1	8-719-200-02	DIODE 10E-2
D2	8-719-113-07	DIODE RD13E-B
D3	8-719-200-02	DIODE 10E-2
D4	8-719-113-07	DIODE RD13E-B
D5	8-719-815-55	DIODE 1S1555
D6	8-719-200-02	DIODE 10E-2
D7	9-719-815-55	DIODE 1S1555
D8	8-719-200-02	DIODE 10E-2
D9	8-719-815-55	DIODE 1S1555
D10	8-719-815-55	DIODE 1S1555
D11	8-719-113-07	DIODE RD13E-B
D12	8-719-200-02	DIODE 10E-2
D13	8-719-113-07	DIODE RD13E-B
D14	8-719-113-07	DIODE RD13E-B
L1	1-407-286-00	INDUCTOR, VAR 2.2mH
L2	1-407-284-00	INDUCTOR, VAR 1mH
L3	1-407-284-00	INDUCTOR, VAR 1mH
L4	1-407-286-00	INDUCTOR, VAR 2.2mH
L5	1-407-286-00	INDUCTOR, VAR 2.2mH
L6	1-407-267-00	INDUCTOR, VAR 1mH
Q1	8-729-612-77	TRANSISTOR 2SA1027R
Q2	8-729-177-43	TRANSISTOR 2SD774
Q3	8-727-632-00	TRANSISTOR 2SA706
Q4	8-727-632-00	TRANSISTOR 2SA706
Q5	8-729-612-77	TRANSISTOR 2SA1027R

Ref. No.	Part No.	Description
Q6	8-729-663-47	TRANSISTOR 2SC1364
Q7	8-729-612-77	TRANSISTOR 2SA1027R
Q8	8-729-663-47	TRANSISTOR 2SC1364
Q9	8-727-632-00	TRANSISTOR 2SA706
Q10	8-727-632-00	TRANSISTOR 2SA706
Q11	8-727-632-00	TRANSISTOR 2SA706
Q12	8-727-632-00	TRANSISTOR 2SA706
Q13	8-729-612-77	TRANSISTOR 2SA1027R
Q14	8-729-663-47	TRANSISTOR 2SC1364
Q15	8-729-612-77	TRANSISTOR 2SA1027R
Q16	8-729-663-47	TRANSISTOR 2SC1364
Q17	8-727-632-00	TRANSISTOR 2SA706
Q18	8-727-632-00	TRANSISTOR 2SA706
Q19	8-729-612-77	TRANSISTOR 2SA1027R
Q20	8-729-612-77	TRANSISTOR 2SA1027R
Q21	8-729-612-77	TRANSISTOR 2SA1027R
Q22	8-729-612-77	TRANSISTOR 2SA1027R
Q23	8-729-177-43	TRANSISTOR 2SD774
Q24	8-729-612-77	TRANSISTOR 2SA1027R
Q25	8-729-663-47	TRANSISTOR 2SC1364
Q26	8-729-612-77	TRANSISTOR 2SA1027R
Q27	8-729-663-47	TRANSISTOR 2SC1364
Q28	8-727-632-00	TRANSISTOR 2SA706
Q29	8-727-632-00	TRANSISTOR 2SA706
Q30	8-729-632-47	TRANSISTOR 2SC1364
Q31	8-729-632-47	TRANSISTOR 2SC1364
Q32	8-727-632-00	TRANSISTOR 2SA706
Q33	8-727-632-00	TRANSISTOR 2SA706
Q34	8-729-612-77	TRANSISTOR 2SA1027R
Q35	8-729-612-77	TRANSISTOR 2SA1027R
Q36	8-729-663-47	TRANSISTOR 2SC1364
Q37	8-727-632-00	TRANSISTOR 2SA706
Q38	8-727-632-00	TRANSISTOR 2SA706
Q39	8-729-612-77	TRANSISTOR 2SA1027R

Ref. No.	Part No.	Description
T1	1-433-196-00	TRANSFORMER, BIAS
T2	1-433-196-00	TRANSFORMER, BIAS
T3	1-433-196-00	TRANSFORMER, BIAS
T4	1-433-196-00	TRANSFORMER, BIAS
T5	1-433-196-00	TRANSFORMER, BIAS
T6	1-433-195-00	TRANSFORMER, OSCILLATION
T7	1-433-195-00	TRANSFORMER, OSCILLATION
T8	1-433-196-00	TRANSFORMER, BIAS
TH1	1-800-198-XX	THERMISTOR, S-1K
TH2	1-800-198-XX	THERMISTOR, S-1K
TH3	1-800-198-XX	THERMISTOR, S-1K

BUFFER BOARD

	A-6011-043-A	COMPLETE PCB, BUFFER
C1	1-131-380-00	CAP, TANTALUM 33 10% 10V
C2	1-131-380-00	CAP, TANTALUM 33 10% 10V
C3	1-131-387-00	CAP, TANTALUM 47 10% 6.3V
C4	1-101-005-00	CAP, CERAMIC 0.022 50V
C6	1-101-005-00	CAP, CERAMIC 0.022 50V
C8	1-131-387-00	CAP, TANTALUM 47 10% 6.3V
C9	1-131-380-00	CAP, TANTALUM 33 10% 10V
C10	1-131-380-00	CAP, TANTALUM 33 10% 10V
D1	8-719-815-55	DIODE 1S1555
D2	8-719-815-55	DIODE 1S1555
D3	8-719-815-55	DIODE 1S1555
D4	8-719-815-55	DIODE 1S1555
D5	8-719-815-55	DIODE 1S1555
D6	8-719-815-55	DIODE 1S1555
L1	1-407-161-XX	INDUCTOR MICRO 22
L2	1-407-161-XX	INDUCTOR MICRO 22
Q1	8-724-375-01	TRANSISTOR 2SC403C
Q2	8-724-375-01	TRANSISTOR 2SC403C
Q3	8-724-375-01	TRANSISTOR 2SC403C
Q4	8-724-375-01	TRANSISTOR 2SC403C
Q5	8-725-412-00	TRANSISTOR 2SC1124

R14	1-244-835-00	RES, CARBON 27 5% 1/2W (NTSC, PM)
R14	1-246-429-00	RES, CARBON 15 5% 1/4W (PS)
R29	1-224-945-00	RES, VAR, METAL 200
R58	1-224-945-00	RES, VAR, METAL 200
R89	1-224-945-00	RES, VAR, METAL 200
R141	1-244-835-00	RES, CARBON 27 5% 1/2W (NTSC, PM)
R141	1-246-429-00	RES, CARBON 15 5% 1/4W (PS)
RY1	1-515-198-00	RELAY, 12V/250Ω
RY2	1-515-198-00	RELAY, 12V/250Ω
RY3	1-515-196-00	RELAY, 12V/250Ω
RY4	1-515-196-00	RELAY, 12V/250Ω
RY5	1-515-198-00	RELAY, 12V/250Ω

Ref. No.	Part No.	Description
Q6	8-727-632-00	TRANSISTOR 2SA706
Q7	8-725-412-00	TRANSISTOR 2SC1124
Q8	8-727-632-00	TRANSISTOR 2SA706
Q9	8-724-375-01	TRANSISTOR 2SC403C
Q10	8-724-375-01	TRANSISTOR 2SC403C
Q11	8-724-375-01	TRANSISTOR 2SC403C
Q12	8-724-375-01	TRANSISTOR 2SC403C

CAPSTAN-A BOARD

	A-6015-053-A	COMPLETE PCB, CAPSTAN-A (NTSC, PM)
	A-6015-054-A	COMPLETE PCB, CAPSTAN-A (PS NO-A4)
	A-6015-055-A	COMPLETE PCB, CAPSTAN-A (PS-A4)
C2	1-107-078-00	CAP, MICA 51PF 5% 50V
C7	1-109-539-00	CAP, MICA 150PF 5% 100V
C11	1-131-427-00	CAP, TANTALUM 220 20% 6.3V (PS ONLY)
C14	1-108-587-00	CAP, MYLAR 0.022 5% 50V (PS)
C14	1-109-539-00	CAP, MICA 150PF 5% 100V (NTSC, PM)
C17	1-109-549-00	CAP, MICA 390PF 5% 100V
C19	1-131-351-00	CAP, TANTALUM 4.7 10% 35V
C20	1-109-539-00	CAP, MICA 150PF 5% 100V
C24	1-102-114-00	CAP, CERAMIC 470PF 10% 50V
C25	1-102-112-00	CAP, CERAMIC 330PF 10% 50V
C27	1-131-408-00	CAP, TANTALUM 1 10% 35V
C28	1-102-110-00	CAP, CERAMIC 220PF 10% 50V
C29	1-102-110-00	CAP, CERAMIC 220PF 10% 50V
C30	1-102-110-00	CAP, CERAMIC 220PF 10% 50V
C31	1-102-114-00	CAP, CERAMIC 470PF 10% 50V
C32	1-131-348-00	CAP, TANTALUM 1.5 10% 35V
C33	1-131-349-00	CAP, TANTALUM 2.2 10% 35V
C38	1-109-602-00	CAP, MICA 0.001 1% 100V
C39	1-107-086-00	CAP, MICA 110PF 5% 100V (PS)
C39	1-109-528-00	CAP, MICA 51PF 5% 100V (NTSC, PM)
C42	1-109-602-00	CAP, MICA 0.001 1% 100V
C45	1-109-535-00	CAP, MICA 100PF 5% 100V
C52	1-101-005-00	CAP, CERAMIC 0.022 50V
C53	1-101-005-00	CAP, CERAMIC 0.022 50V
C60	1-101-005-00	CAP, CERAMIC 0.022 50V

Ref. No.	Part No.	Description
C62	1-101-005-00	CAP, CERAMIC 0.022 50V
C65	1-131-348-00	CAP, TANTALUM 1.5 10% 35V
C70	1-109-542-00	CAP, MICA 220PF 5% 100V
C71	1-109-553-00	CAP, MICA 470PF 5% 100V
C72	1-109-542-00	CAP, MICA 220PF 5% 100V
C73	1-109-553-00	CAP, MICA 470PF 5% 100V
C74	1-109-542-00	CAP, MICA 220PF 5% 100V
C75	1-109-553-00	CAP, MICA 470PF 5% 100V
C76	1-109-542-00	CAP, MICA 220PF 5% 100V
C77	1-109-553-00	CAP, MICA 470PF 5% 100V
C78	1-109-542-00	CAP, MICA 220PF 5% 100V
C79	1-109-553-00	CAP, MICA 470PF 5% 100V
C80	1-109-542-00	CAP, MICA 220PF 5% 100V
C81	1-109-553-00	CAP, MICA 470PF 5% 100V
C82	1-109-542-00	CAP, MICA 220PF 5% 100V
C83	1-109-553-00	CAP, MICA 470PF 5% 100V
C84	1-109-542-00	CAP, MICA 220PF 5% 100V
C85	1-109-553-00	CAP, MICA 470PF 5% 100V
C87	1-102-114-00	CAP, CERAMIC 470PF 10% 50V
C90	1-109-553-00	CAP, MICA 470PF 5% 100V
C91	1-109-553-00	CAP, MICA 470PF 5% 100V
C92	1-131-408-00	CAP, TANTALUM 1 10% 35V
C93	1-101-005-00	CAP, CERAMIC 0.022 50V
C95	1-101-005-00	CAP, CERAMIC 0.022 50V
C97	1-101-005-00	CAP, CERAMIC 0.022 50V
C98	1-101-005-00	CAP, CERAMIC 0.022 50V
C99	1-101-005-00	CAP, CERAMIC 0.022 50V
C100	1-101-005-00	CAP, CERAMIC 0.022 50V
C105	1-131-371-00	CAP, TANTALUM 10 10% 16V
C106	1-131-348-00	CAP, TANTALUM 1.5 10% 35V
C110	1-131-349-00	CAP, TANTALUM 2.2 10% 35V
C111	1-131-349-00	CAP, TANTALUM 2.2 10% 35V
C112	1-109-545-00	CAP, MICA 270P 5% 100V (PS)
C113	1-161-043-00	CAP, CERAMIC 0.0022 10% 50V
D1	8-719-911-19	DIODE 1SS119
D2	8-719-911-19	DIODE 1SS119
D3	8-719-801-02	DIODE TLR102
D4	8-719-911-19	DIODE 1SS119
D5	8-719-911-19	DIODE 1SS119
D6	8-719-911-19	DIODE 1SS119
D7	8-719-911-19	DIODE 1SS119
D8	8-719-801-02	DIODE TLR102
D9	8-719-801-02	DIODE TLR102
D11	8-719-110-07	DIODE RD10E-B
D12	8-719-911-19	DIODE 1SS119
D13	8-719-911-19	DIODE 1SS119
D14	8-719-911-19	DIODE 1SS119
D15	8-719-911-19	DIODE 1SS119
D16	8-719-911-19	DIODE 1SS119

Ref. No.	Part No.	Description
D17	8-719-911-19	DIODE 1SS119
D18	8-719-911-19	DIODE 1SS119
D19	8-719-911-19	DIODE 1SS119
D20	8-719-911-19	DIODE 1SS119
D21	8-719-911-19	DIODE 1SS119
D22	8-719-911-19	DIODE 1SS119
D23	8-719-911-19	DIODE 1SS119
D25	8-719-911-19	DIODE 1SS119
D26	8-719-911-19	DIODE 1SS119
IC1	8-759-045-85	IC MC14585BCP, C-MOS; MOTOROLA
IC2	8-759-241-74	IC TC40174BP, C-MOS (MC14174BCP; MOTOROLA)
IC3	8-759-240-40	IC TC4040BP, C-MOS (CD4040BE; RCA)
IC4	8-759-240-20	IC TC4040BP, C-MOS (CD4040BE; RCA)
IC5	8-759-990-82	IC TL082CP; TI
IC6	8-759-115-90	IC μPC159A (LM381H; NSC)
IC7	8-759-907-39	IC μA739PC; FSC
IC8	8-759-045-85	IC MC14585BCP, C-MOS; MOTOROLA
IC9	8-759-045-85	IC MC14585BCP, C-MOS; MOTOROLA
IC10	8-759-241-74	IC TC40174BP, C-MOS (MC14174BCP; MOTOROLA)
IC11	8-759-240-81	IC TC4071BP, C-MOS (CD4081BE; RCA)
IC12	8-759-245-16	IC TC4516BP, C-MOS (MC14516BCP; MOTOROLA)
IC13	8-759-245-16	IC TC4516BP, C-MOS (MC14516BCP; MOTOROLA)
IC14	8-759-245-16	IC TC4516BP, C-MOS (MC14516BCP; MOTOROLA)
IC15	8-759-240-71	IC TC4071BP, C-MOS (CD4071BE; RCA)
IC16	8-759-911-24	IC SN74S124N, TTL; TI
IC17	8-759-345-38	IC HD14528BP, C-MOS; MOTOROLA
IC18	8-759-632-06	IC M53206P, TTL (SN7406N; TI)
IC19	8-759-345-38	IC HD14538BP, C-MOS; MOTOROLA
IC20	8-759-240-01	IC TC4001BP, C-MOS (CD4001BE; RCA)
IC21	8-759-245-16	IC TC4516BP, C-MOS (MC14516BCP; MOTOROLA)
IC22	8-759-245-16	IC TC4516BP, C-MOS (MC14516BCP; MOTOROLA)
IC23	8-759-245-16	IC TC4516BP, C-MOS (MC14516BCP; MOTOROLA)
IC24	8-759-240-01	IC TC4001BP, C-MOS (CD4001BE; RCA)
IC25	8-759-240-73	IC TC4073BP, C-MOS (CD4073BE; RCA)
IC26	8-759-240-49	IC TC4049BP, C-MOS (CD4049BE; RCA)
IC27	8-759-240-81	IC TC4081BP, C-MOS (CD4081BE; RCA)
IC28	8-759-240-49	IC TC4049BP, C-MOS (CD4049BE; RCA)
IC29	8-759-240-71	IC TC4071BP, C-MOS (CD4071BE; RCA)
IC30	8-759-245-16	IC TC4516BP, C-MOS (MC14516BCP; MOTOROLA)
IC31	8-759-245-16	IC TC4516BP, C-MOS (MC14516BCP; MOTOROLA)
IC32	8-759-245-16	IC TC4516BP, C-MOS (MC14516BCP; MOTOROLA)
IC34	8-759-903-93	IC SN74LS393N, TTL; TI
IC35	8-759-240-49	IC TC4049BP, C-MOS (CD4049BE; RCA)
IC36	8-759-133-90	IC μPC339C (LM339; NSC)
IC37	8-759-140-53	IC μPD4053BC, C-MOS; NEC
IC38	8-759-984-13	IC MB84013M, C-MOS; FUJITSU
IC39	8-759-040-70	IC MC14070BCP, C-MOS; MOTOROLA
IC40	8-759-906-69	IC SN74LS669N, TTL; TI
IC41	8-759-045-57	IC MC14557BCP, C-MOS; MOTOROLA
IC42	8-759-045-57	IC MC14557BCP, C-MOS; MOTOROLA
IC43	8-759-140-53	IC μPD4053BC, C-MOS; NEC
IC44	8-759-250-20	IC TC5020BP, TOSHIBA
IC45	8-759-240-44	IC TC4044BP, C-MOS (CD4044BE; RCA)
IC46	8-759-045-84	IC MC14584BCP; MOTOROLA
IC47	8-759-133-90	IC μPC339C (LM339; NSC)
IC48	8-759-140-53	IC μPD4053BC, C-MOS; NEC
IC49	8-759-140-53	IC μPD4053BC, C-MOS; NEC
IC50	8-759-990-82	IC TL082CP; TI
IC51	8-759-753-18	IC MB8518H-C1CA, PROM; FUJITSU
IC52	8-759-990-82	IC TL082CP; TI
IC53	8-759-377-43	IC HA17741GS (μA741TC; FSC)
IC55	8-759-145-57	IC μPC4557C; NEC
IC56	8-759-045-84	IC MC14584BCP; MOTOROLA
IC57	8-759-240-44	IC TC4044BP, C-MOS (CD4044BE; RCA)

Ref. No.	Part No.	Description
IC58	8-759-900-82	IC TL082CP, TI
IC59	8-759-345-38	IC HD14538BP, C-MOS; HITACHI
IC61	8-759-984-13	IC MB84013M, C-MOS; FUJITSU
L1	1-407-498-00	INDUCTOR MICRO 3.3mH
LV1	1-407-301-00	INDUCTOR VAR 9mH
Q1	8-765-600-00	TRANSISTOR 2SC2593
Q2	8-765-600-00	TRANSISTOR 2SC2593
Q3	8-765-600-00	TRANSISTOR 2SC2593
Q4	8-729-384-48	TRANSISTOR 2SA844
Q5	8-729-368-00	TRANSISTOR 2SC689H
Q6	8-729-368-00	TRANSISTOR 2SC689H
Q7	8-762-210-00	TRANSISTOR 2SA840
Q8	8-729-384-48	TRANSISTOR 2SA844
Q9	8-761-622-00	TRANSISTOR 2SC1636
Q10	8-724-375-01	TRANSISTOR 2SC403C
R37	1-214-173-00	RES, METAL 51K 1% 1/4W
R47	1-214-170-00	RES, METAL 39K 1% 1/4W
R55	1-214-156-00	RES, METAL 10K 1% 1/4W
R56	1-214-149-00	RES, METAL 5.1K 1% 1/4W
R59	1-214-132-00	RES, METAL 1K 1% 1/4W
R60	1-214-154-00	RES, METAL 8.2K 1% 1/4W
R61	1-214-150-00	RES, METAL 5.6K 1% 1/4W
R64	1-214-474-00	RES, METAL 4.7M 5% 1/4W
R65	1-214-474-00	RES, METAL 4.7M 5% 1/4W
R69	1-214-141-00	RES, METAL 2.4K 1% 1/4W
R70	1-214-143-00	RES, METAL 3K 1% 1/4W
R71	1-214-160-00	RES, METAL 15K 1% 1/4W
R72	1-214-158-00	RES, METAL 12K 1% 1/4W
R73		
CHOICE	1-214-143-00	RES, METAL 3K 1% 1/4W
	1-214-136-00	RES, METAL 1.5K 1% 1/4W
R74	1-214-132-00	RES, METAL 1K 1% 1/4W
R77	1-214-156-00	RES, METAL 10K 1% 1/4W
R79	1-214-143-00	RES, METAL 3K 1% 1/4W
R80	1-214-143-00	RES, METAL 3K 1% 1/4W
R88	1-214-173-00	RES, METAL 51K 1% 1/4W
R89	1-214-173-00	RES, METAL 51K 1% 1/4W
R91	1-214-173-00	RES, METAL 51K 1% 1/4W
R94	1-214-156-00	RES, METAL 10K 1% 1/4W
R100	1-214-180-00	RES, METAL 100K 1% 1/4W
R101	1-214-135-00	RES, METAL 1.3K 1% 1/4W
R107	1-214-143-00	RES, METAL 3K 1% 1/4W
R108	1-214-147-00	METAL 4.3K 1% 1/4W

Ref. No.	Part No.	Description
RB1	1-231-385-00	RESISTOR BLOCK 4.7K x 8
RB2	1-231-385-00	RESISTOR BLOCK 4.7K x 8
RB3	1-235-005-00	RESISTOR BLOCK 47K x 8
RB4	1-235-004-00	RESISTOR BLOCK 100K x 4
RB5	1-235-005-00	RESISTOR BLOCK 47K x 8
RB6	1-235-004-00	RESISTOR BLOCK 100K x 4
RV1	1-224-938-00	RES, VAR, METAL 2K (PS NO-A4)
RV1	1-224-940-00	RES, VAR, METAL 10K (PS-A4)
RV2	1-226-095-00	RES, VAR, METAL 200K
RV3	1-224-942-00	RES, VAR, METAL 50K
RV4	1-224-942-00	RES, VAR, METAL 50K
RV5	1-224-940-00	RES, VAR, METAL 10K
RV6	1-224-940-00	RES, VAR, METAL 10K
RV7	1-224-095-00	RES, VAR, METAL 200K (NTSC, PM)
RV8	1-228-110-00	RES, VAR, METAL 2K
RV9	1-224-938-00	RES, VAR, METAL 2K
RV10	1-224-942-00	RES, VAR, METAL 50K
RY1	1-515-309-21	RELAY, 12V/1kΩ

COUPLER-A BOARD

	A-6025-073-A	COMPLETE PCB, COUPLER-A
C2	1-131-359-00	CAP, TANTALUM 10 10% 25V
C3	1-131-359-00	CAP, TANTALUM 10 10% 25V
CN341	1-508-743-00	TOP TYPE RECEPTACLE, 5P, MALE
CN342	1-508-742-00	TOP TYPE RECEPTACLE, 3P, MALE
CN343	1-508-845-00	TOP TYPE RECEPTACLE, 6P, MALE
CN344	1-508-742-00	TOP TYPE RECEPTACLE, 3P, MALE
D1	8-719-815-55	DIODE 1S1555
D2	8-719-815-55	DIODE 1S1555
D3	8-719-815-55	DIODE 1S1555
D4	8-719-815-55	DIODE 1S1555

Ref. No.	Part No.	Description
Q1	**8-729-663-47**	**TRANSISTOR 2SC1364**
Q2	**8-729-663-47**	**TRANSISTOR 2SC1364**
Q3	**8-729-612-77**	**TRANSISTOR 2SA1027R**
Q4	**8-729-663-47**	**TRANSISTOR 2SC1364**
Q5	**8-729-663-47**	**TRANSISTOR 2SC1364**
Q6	**8-729-612-77**	**TRANSISTOR 2SA1027R**
RV1	**1-224-941-00**	**RES, VAR, METAL 20K**
RV2	**1-224-941-00**	**RES, VAR, METAL 20K**

COUPLER-SA BOARD

	A-6025-074-A	COMPLETE PCB, COUPLER-SA
C4	**1-131-359-00**	**CAP, TANTALUM 10 10% 25V**
CN331	1-508-735-00	SIDE TYPE RECEPTACLE, 5P, MALE
CN332	1-508-734-21	SIDE TYPE RECEPTACLE, 3P, MALE
CN333	1-508-848-00	SIDE TYPE RECEPTACLE, 6P, MALE
CN334	1-508-734-00	SIDE TYPE RECEPTACLE, 3P, MALE
D1	**8-719-162-07**	**DIODE RD6.2E-B**
D2	**8-719-815-55**	**DIODE 1S1555**
D3	**8-719-815-55**	**DIODE 1S1555**
IC1	**8-759-145-57**	**IC μPC4557C; NEC**
R1	**1-214-125-00**	**RES, METAL 510 1% 1/4W**
R2	**1-214-149-00**	**RES, METAL 5.1K 1% 1/4W**
R3	**1-224-928-00**	**RES, VAR, METAL 2K**
R5	**1-214-108-00**	**RES, METAL 100 1% 1/4W**
R6	**1-214-150-00**	**RES, METAL 5.6K 1% 1/4W**
R10	**1-224-931-00**	**RES, VAR, METAL 20K**

COUPLER-T BOARD

	A-6025-016-B	COMPLETE PCB, COUPLER-T
C4	**1-131-359-00**	**CAP, TANTALUM 10 10% 25V**
CN335	1-508-736-00	SIDE TYPE RECEPTACLE, 10P, MALE
CN336	1-508-734-21	SIDE TYPE RECEPTACLE, 3P, MALE
CN337	1-508-735-21	SIDE TYPE RECEPTACLE, 5P, MALE
CN338	1-508-734-00	SIDE TYPE RECEPTACLE, 3P, MALE
D1	**8-719-162-07**	**DIODE RD6.2E-B**
D2	**8-719-815-55**	**DIODE 1S1555**
D3	**8-719-815-55**	**DIODE 1S1555**
IC1	**8-759-145-57**	**IC μPC4557C; NEC**
Q1	**8-729-663-47**	**TRANSISTOR 2SC1364**
R1	**1-214-125-00**	**RES, METAL 510 1% 1/4W**
R2	**1-214-149-00**	**RES, METAL 5.1K 1% 1/4W**
R3	**1-224-928-00**	**RES, VAR, METAL 2K**
R5	**1-214-108-00**	**RES, METAL 100 1% 1/4W**
R6	**1-214-150-00**	**RES, METAL 5.6K 1% 1/4W**
R10	**1-224-931-00**	**RES, VAR, METAL 20K**

DEMOD BOARD (NTSC, PM)

Ref. No.	Part No.	Description
	A-6011-046-A	COMPLETE PCB, DEMOD (NTSC, PM)
C5	1-101-005-00	CAP, CERAMIC 0.022 50V
C6	1-101-005-00	CAP, CERAMIC 0.022 50V
C7	1-131-408-00	CAP, TANTALUM 1 10% 35V
C8	1-101-005-00	CAP, CERAMIC 0.022 50V
C9	1-101-001-00	CAP, CERAMIC 0.001 50V
C10	1-131-408-00	CAP, TANTALUM 1 10% 35V
C11	1-101-005-00	CAP, CERAMIC 0.022 50V
C12	1-101-001-00	CAP, CERAMIC 0.001 50V
C13	1-101-005-00	CAP, CERAMIC 0.022 50V
C14	1-131-380-00	CAP, TANTALUM 33 10% 10V
C15	1-101-005-00	CAP, CERAMIC 0.022 50V
C16	1-101-005-00	CAP, CERAMIC 0.022 50V
C17	1-107-080-00	CAP, MICA 62PF 5% 50V
C18	1-101-005-00	CAP, CERAMIC 0.022 50V
C20	1-101-005-00	CAP, CERAMIC 0.022 50V
C21	1-101-005-00	CAP, CERAMIC 0.022 50V
C24	1-101-005-00	CAP, CERAMIC 0.022 50V
C25	1-101-001-00	CAP, CERAMIC 0.001 50V
C26	1-101-001-00	CAP, CERAMIC 0.001 50V
C27	1-101-005-00	CAP, CERAMIC 0.022 50V
C28	1-101-005-00	CAP, CERAMIC 0.022 50V
C29	1-101-005-00	CAP, CERAMIC 0.022 50V
C30	1-101-005-00	CAP, CERAMIC 0.022 50V
C32	1-101-005-00	CAP, CERAMIC 0.022 50V
C33	1-101-005-00	CAP, CERAMIC 0.022 50V
C35	1-101-001-00	CAP, CERAMIC 0.001 50V
C36	1-101-001-00	CAP, CERAMIC 0.001 50V
C37	1-101-005-00	CAP, CERAMIC 0.022 50V
C38	1-107-099-00	CAP, MICA 2PF 5% 50V
C39	1-101-005-00	CAP, CERAMIC 0.022 50V
C40	1-101-005-00	CAP, CERAMIC 0.022 50V
C41	1-107-102-00	CAP, MICA 5PF 5% 50V
C42	1-101-005-00	CAP, CERAMIC 0.022 50V
C43	1-101-005-00	CAP, CERAMIC 0.022 50V
C44	1-101-005-00	CAP, CERAMIC 0.022 50V
C45	1-101-005-00	CAP, CERAMIC 0.022 50V
C47	1-101-005-00	CAP, CERAMIC 0.022 50V
C49	1-101-005-00	CAP, CERAMIC 0.022 50V
C52	1-107-087-00	CAP, MICA 120PF 5% 50V
C56	1-101-005-00	CAP, CERAMIC 0.022 50V
C57	1-109-619-00	CAP, MICA 180PF 1% 500V
C58	1-109-628-00	CAP, MICA 160PF 2% 500V
C59	1-101-005-00	CAP, CERAMIC 0.022 50V
C60	1-109-622-00	CAP, MICA 0.0012 1% 100V
C61	1-109-621-00	CAP, MICA 220PF 1% 500V
C62	1-101-005-00	CAP, CERAMIC 0.022 50V
C63	1-141-131-00	CAP, TRIMMER
C66	1-107-208-00	CAP, MICA 5PF 5% 500V
C67	1-107-080-00	CAP, MICA 62PF 5% 50V
C69	1-107-067-00	CAP, MICA 18PF 5% 50V
C73	1-101-005-00	CAP, CERAMIC 0.022 50V
C74	1-107-083-00	CAP, MICA 82PF 5% 50V
C75	1-131-402-00	CAP, TANTALUM 0.1 10% 35V
C77	1-101-005-00	CAP, CERAMIC 0.022 50V
C79	1-101-005-00	CAP, CERAMIC 0.022 50V
C81	1-101-005-00	CAP, CERAMIC 0.022 50V
C86	1-101-005-00	CAP, CERAMIC 0.022 50V
C87	1-101-005-00	CAP, CERAMIC 0.022 50V
C89	1-107-105-00	CAP, MICA 8PF 5% 50V
C92	1-101-005-00	CAP, CERAMIC 0.022 50V
C94	1-101-005-00	CAP, CERAMIC 0.022 50V
C96	1-107-102-00	CAP, MICA 5PF 5% 50V
C98	1-131-404-00	CAP, TANTALUM 0.22 10% 35V
C104	1-107-099-00	CAP, MICA 2PF 5% 50V
C105	1-107-102-00	CAP, MICA 5PF 5% 50V
C106	1-107-070-00	CAP, MICA 24PF 5% 50V
C204	1-107-083-00	CAP, MICA 82PF 5% 50V
D1	8-719-815-55	DIODE 1S1555
D2	8-719-815-55	DIODE 1S1555
D3	8-719-815-55	DIODE 1S1555
D4	8-719-815-55	DIODE 1S1555
D5	8-719-815-55	DIODE 1S1555
D6	8-719-815-55	DIODE 1S1555
D7	8-719-700-25	DIODE 1S1925PS
D8	8-719-700-25	DIODE 1S1925PS
D9	8-719-700-25	DIODE 1S1925PS
D10	8-719-700-25	DIODE 1S1925PS
D11	8-719-116-07	DIODE RD16E-B
D12	8-719-815-55	DIODE 1S1555
D13	8-719-815-55	DIODE 1S1555
D14	8-719-815-55	DIODE 1S1555
FL1	1-231-667-00	FILTER, LOWPASS 4.5MHz (NTSC, PM)
FL2	1-231-415-00	FILTER, LOWPASS 7MHz
IC1	8-759-632-00	IC M53200P, TTL (SN7400N; TI)
IC2	8-759-930-54	IC CA3054; RCA
IC3	8-759-930-54	IC CA3054; RCA
IC4	8-759-930-54	IC CA3054; RCA
IC5	8-759-930-54	IC CA3054; RCA

Ref. No.	Part No.	Description
IC6	8-759-930-54	IC CA3054; RCA
IC7	8-759-902-21	IC SN74LS221N, TTL; TI
IC8	8-759-632-06	IC M53206P, TTL (SN7406N; TI)
IC9	8-759-902-21	IC SN74LS221N, TTL; TI
IC10	8-759-905-92	IC NE592H; NSC
IC11	8-759-275-14	IC TA7504M-R (μA741HC; FSC)
IC202	8-759-942-65	IC SN74265N, TTL; TI
L3	1-407-177-XX	INDUCTOR MICRO 470
L4	1-407-161-XX	INDUCTOR MICRO 22
L5	1-407-161-XX	INDUCTOR MICRO 22
L6	1-407-161-XX	INDUCTOR MICRO 22
L7	1-407-161-XX	INDUCTOR MICRO 22
L8	1-407-161-XX	INDUCTOR MICRO 22
L9	1-407-161-XX	INDUCTOR MICRO 22
L10	1-407-161-XX	INDUCTOR MICRO 22
L11	1-407-161-XX	INDUCTOR MICRO 22
L12	1-407-161-XX	INDUCTOR MICRO 22
L13	1-407-571-00	COIL, VAR 22mH
L14	1-407-161-XX	INDUCTOR MICRO 22
L15	1-407-161-XX	INDUCTOR MICRO 22
L16	1-407-161-XX	INDUCTOR MICRO 22
L18	1-409-309-00	COIL, TOROIDAL
L19	1-409-309-00	COIL, TOROIDAL
Q1	8-725-800-00	TRANSISTOR 2SC1128
Q2	8-725-800-00	TRANSISTOR 2SC1128
Q3	8-725-800-00	TRANSISTOR 2SC1128
Q4	8-725-800-00	TRANSISTOR 2SC1128
Q5	8-725-800-00	TRANSISTOR 2SC1128
Q6	8-725-800-00	TRANSISTOR 2SC1128
Q7	8-725-800-00	TRANSISTOR 2SC1128
Q8	8-729-171-10	TRANSISTOR 2SA711
Q9	8-729-171-10	TRANSISTOR 2SA711
Q11	8-724-375-01	TRANSISTOR 2SC403C
Q12	8-724-375-01	TRANSISTOR 2SC403C
Q13	8-723-302-00	TRANSISTOR 2SK43-2
Q14	8-723-302-00	TRANSISTOR 2SK43-2
Q15	8-724-375-01	TRANSISTOR 2SC403C
Q16	8-724-375-01	TRANSISTOR 2SC403C
Q17	8-729-612-77	TRANSISTOR 2SA1027R
Q18	8-724-375-01	TRANSISTOR 2SC403C
Q19	8-724-375-01	TRANSISTOR 2SC403C
Q20	8-724-375-01	TRANSISTOR 2SC403C
Q21	8-724-375-01	TRANSISTOR 2SC403C
Q22	8-724-375-01	TRANSISTOR 2SC403C
Q23	8-725-412-00	TRANSISTOR 2SC1124
Q24	8-725-412-00	TRANSISTOR 2SC1124
Q25	8-724-375-01	TRANSISTOR 2SC403C

Ref. No.	Part No.	Description
R29	1-224-940-00	RES, VAR, METAL 10K
R57	1-224-940-00	RES, VAR, METAL 10K
R59	1-214-092-00	RES, METAL 47K 5% 1/4W
R83	1-214-101-00	RES, METAL 51 1% 1/4W
R86	1-214-101-00	RES, METAL 51 1% 1/4W
R88	1-214-101-00	RES, METAL 51 1% 1/4W
R89	1-214-101-00	RES, METAL 51 1% 1/4W
R90	1-214-101-00	RES, METAL 51 1% 1/4W
R91	1-214-101-00	RES, METAL 51 1% 1/4W
R96	1-214-112-00	RES, METAL 150 1% 1/4W
R97	1-214-112-00	RES, METAL 150 1% 1/4W
R100	1-214-114-00	RES, METAL 180 1% 1/4W
R101	1-214-114-00	RES, METAL 180 1% 1/4W
R102	1-214-156-00	RES, METAL 10K 1% 1/4W
R103	1-214-165-00	RES, METAL 24K 1% 1/4W
R104	1-214-116-00	RES, METAL 220 1% 1/4W
R105	1-214-116-00	RES, METAL 220 1% 1/4W
R106	1-214-116-00	RES, METAL 220 1% 1/4W
R108	1-214-123-00	RES, METAL 430 1% 1/4W
R110	1-214-128-00	RES, METAL 680 1% 1/4W
R114	1-214-128-00	RES, METAL 680 1% 1/4W
R115	1-214-166-00	RES, METAL 27K 1% 1/4W
R116	1-214-168-00	RES, METAL 33K 1% 1/4W
R117	1-214-140-00	RES, METAL 2.2K 1% 1/4W
R118	1-214-140-00	RES, METAL 2.2K 1% 1/4W
R119	1-214-127-00	RES, METAL 620 1% 1/4W
R120	1-224-944-00	RES, VAR, METAL 100
R121	1-214-108-00	RES, METAL 100 1% 1/4W
R123	1-214-115-00	RES, METAL 200 1% 1/4W
R124	1-214-097-00	RES, METAL 36 1% 1/4W
R125	1-214-098-00	RES, METAL 39 1% 1/4W
R126	1-214-111-00	RES, METAL 130 1% 1/4W
R127	1-214-164-00	RES, METAL 22K 1% 1/4W
R128	1-224-939-00	RES, VAR, METAL 5K
R129	1-214-160-00	RES, METAL 15K 1% 1/4W
R130	1-214-156-00	RES, METAL 10K 1% 1/4W
R131	1-214-156-00	RES, METAL 10K 1% 1/4W
R133	1-224-936-00	RES, VAR, METAL 500
R141	1-224-934-00	RES, VAR, METAL 100
R151	1-224-939-00	RES, VAR, METAL 5K
R157	1-224-939-00	RES, VAR, METAL 5K
R159	1-214-092-00	RES, METAL 22 1% 1/4W
R160	1-214-114-00	RES, METAL 180 1% 1/4W
R162	1-214-119-00	RES, METAL 300 1% 1/4W
R165	1-214-127-00	RES, METAL 620 1% 1/4W
R166	1-214-118-00	RES, METAL 270 1% 1/4W
R169	1-214-135-00	RES, METAL 1.3K 1% 1/4W
R171	1-214-142-00	RES, METAL 2.7K 1% 1/4W
R172	1-214-108-00	RES, METAL 100 1% 1/4W
R173	1-214-146-00	RES, METAL 3.9K 1% 1/4W

Ref. No.	Part No.	Description
R174	1-214-113-00	RES, METAL 160 1% 1/4W
R175	1-214-151-00	RES, METAL 6.2K 1% 1/4W
R187	1-214-101-00	RES, METAL 51 1% 1/4W
R188	1-214-105-00	RES, METAL 75 1% 1/4W
R189	1-214-105-00	RES, METAL 75 1% 1/4W
R190	1-214-105-00	RES, METAL 75 1% 1/4W
R194	1-224-941-00	RES, VAR, METAL 20K
R195	1-224-940-00	RES, VAR, METAL 10K
R196	1-214-128-00	RES, METAL 680 1% 1/4W
R207	1-214-126-00	RES, METAL 560 1% 1/4W
R208	1-214-127-00	RES, METAL 620 1% 1/4W
TH1	1-800-200-00	THERMISTOR, S-3K

DEMOD BOARD (PS)

	A-6011-059-A	COMPLETE PCB, DEMOD (PS)
C5	1-101-005-00	CAP, CERAMIC 0.022 50V
C6	1-101-005-00	CAP, CERAMIC 0.022 50V
C7	1-131-408-00	CAP, TANTALUM 1 10% 35V
C8	1-101-005-00	CAP, CERAMIC 0.022 50V
C9	1-101-001-00	CAP, CERAMIC 0.001 50V
C10	1-131-408-00	CAP, TANTALUM 1 10% 35V
C11	1-101-005-00	CAP, CERAMIC 0.022 50V
C12	1-101-001-00	CAP, CERAMIC 0.001 50V
C13	1-101-005-00	CAP, CERAMIC 0.022 50V
C14	1-131-380-00	CAP, TANTALUM 33 10% 10V
C15	1-101-005-00	CAP, CERAMIC 0.022 50V
C16	1-101-005-00	CAP, CERAMIC 0.022 50V
C17	1-107-080-00	CAP, MICA 62PF 5% 50V
C18	1-101-005-00	CAP, CERAMIC 0.022 50V
C20	1-101-005-00	CAP, CERAMIC 0.022 50V
C21	1-101-005-00	CAP, CERAMIC 0.022 50V
C24	1-101-005-00	CAP, CERAMIC 0.022 50V
C25	1-101-001-00	CAP, CERAMIC 0.001 50V
C26	1-101-001-00	CAP, CERAMIC 0.001 50V
C27	1-101-005-00	CAP, CERAMIC 0.022 50V
C28	1-101-005-00	CAP, CERAMIC 0.022 50V
C29	1-101-005-00	CAP, CERAMIC 0.022 50V
C30	1-101-005-00	CAP, CERAMIC 0.022 50V
C32	1-101-005-00	CAP, CERAMIC 0.022 50V
C33	1-101-005-00	CAP, CERAMIC 0.022 50V
C35	1-101-001-00	CAP, CERAMIC 0.001 50V
C36	1-101-001-00	CAP, CERAMIC 0.001 50V
C37	1-101-005-00	CAP, CERAMIC 0.022 50V
C38	1-107-042-00	CAP, MICA 2.2PF 5% 500V
C39	1-101-005-00	CAP, CERAMIC 0.022 50V
C40	1-101-005-00	CAP, CERAMIC 0.022 50V
C41	1-107-026-00	CAP, MICA 5.1PF 5% 500V
C42	1-101-005-00	CAP, CERAMIC 0.022 50V
C43	1-101-005-00	CAP, CERAMIC 0.022 50V
C44	1-101-005-00	CAP, CERAMIC 0.022 50V
C45	1-101-005-00	CAP, CERAMIC 0.022 50V
C47	1-101-005-00	CAP, CERAMIC 0.022 50V
C49	1-101-005-00	CAP, CERAMIC 0.022 50V
C52	1-107-091-00	CAP, MICA 180PF 5% 50V
C56	1-101-005-00	CAP, CERAMIC 0.022 50V
C57	1-109-619-00	CAP, MICA 180PF 1% 500V
C58	1-109-628-00	CAP, MICA 160PF 2% 500V
C59	1-101-005-00	CAP, MICA 0.022 50V
C60	1-109-626-00	CAP, MICA 100PF 2% 500V
C62	1-101-005-00	CAP, CERAMIC 0.022 50V
C63	1-141-131-00	CAP, TRIMMER
C67	1-107-076-00	CAP, MICA 43PF 5% 50V
C69	1-107-208-00	CAP, MICA 18PF 5% 500V
C73	1-101-005-00	CAP, CERAMIC 0.022 50V
C74	1-107-079-00	CAP, MICA 56PF 5% 50V
C75	1-131-402-00	CAP, TANTALUM 0.1 10% 35V
C77	1-101-005-00	CAP, CERAMIC 0.022 50V
C79	1-101-005-00	CAP, CERAMIC 0.022 50V
C81	1-101-005-00	CAP, CERAMIC 0.022 50V
C86	1-101-005-00	CAP, CERAMIC 0.022 50V
C87	1-101-005-00	CAP, CERAMIC 0.022 50V
C89	1-107-026-00	CAP, MICA 5.1PF 5% 500V
C92	1-101-005-00	CAP, CERAMIC 0.022 50V
C94	1-101-005-00	CAP, CERAMIC 0.022 50V
C96	1-107-026-00	CAP, MICA 5.1PF 5% 500V
C98	1-131-404-00	CAP, TANTALUM 0.22 10% 35V
C103	1-131-387-00	CAP, TANTALUM 47 10% 6.3V
C104	1-107-042-00	CAP, MICA 2.2PF 5% 500V
C105	1-107-026-00	CAP, MICA 5.1PF 5% 500V
C204	1-109-545-00	CAP, MICA 270PF 5% 100V
C205	1-109-540-00	CAP, MICA 180PF 5% 100V
D1	8-719-815-55	DIODE 1S1555
D2	8-719-815-55	DIODE 1S1555
D3	8-719-815-55	DIODE 1S1555
D4	8-719-815-55	DIODE 1S1555
D5	8-719-815-55	DIODE 1S1555

Ref. No.	Part No.	Description
D6	8-719-815-55	DIODE 1S1555
D7	8-719-700-25	DIODE 1S1925PS
D8	8-719-700-25	DIODE 1S1925PS
D9	8-719-700-25	DIODE 1S1925PS
D10	8-719-700-25	DIODE 1S1925PS
D11	8-719-113-07	DIODE RD13E-B
D12	8-719-815-55	DIODE 1S1555
D13	8-719-815-55	DIODE 1S1555
D14	8-719-815-55	DIODE 1S1555
FL1	1-235-014-00	FILTER, LOWPASS 5MHz
FL2	1-231-415-00	FILTER, LOWPASS 7MHz
IC1	8-759-632-00	IC M53200P, TTL (SN7400; TI)
IC2	8-759-930-54	IC CA3054; RCA
IC3	8-759-930-54	IC CA3054; RCA
IC4	8-759-930-54	IC CA3054; RCA
IC5	8-759-930-54	IC CA3054; RCA
IC6	8-759-930-54	IC CA3054; RCA
IC7	8-759-902-21	IC SN74LS221N, TTL; TI
IC8	8-759-632-06	IC M53206P, TTL (SN7406N; TI)
IC9	8-759-902-21	IC SN74LS221N, TTL; TI
IC10	8-759-905-92	IC NE592H; NSC
IC11	8-759-275-14	IC TA7504M-R (μA741H; FSC)
IC202	8-759-942-65	IC SN74265N, TTL; TI
L3	1-407-177-XX	INDUCTOR MICRO 470
L4	1-407-161-XX	INDUCTOR MICRO 22
L5	1-407-161-XX	INDUCTOR MICRO 22
L6	1-407-161-XX	INDUCTOR MICRO 22
L7	1-407-161-XX	INDUCTOR MICRO 22
L8	1-407-161-XX	INDUCTOR MICRO 22
L9	1-407-161-XX	INDUCTOR MICRO 22
L10	1-407-161-XX	INDUCTOR MICRO 22
L11	1-407-161-XX	INDUCTOR MICRO 22
L12	1-407-161-XX	INDUCTOR MICRO 22
L13	1-407-571-00	COIL, VAR 22mH
L14	1-407-161-XX	INDUCTOR MICRO 22
L15	1-407-161-XX	INDUCTOR MICRO 22
L16	1-407-161-XX	INDUCTOR MICRO 22
L18	1-409-309-00	COIL, TOROIDAL
L19	1-409-309-00	COIL, TOROIDAL
Q1	8-725-800-00	TRANSISTOR 2SC1128
Q2	8-725-800-00	TRANSISTOR 2SC1128
Q3	8-725-800-00	TRANSISTOR 2SC1128
Q4	8-725-800-00	TRANSISTOR 2SC1128
Q5	8-725-800-00	TRANSISTOR 2SC1128
Q6	8-725-800-00	TRANSISTOR 2SC1128
Q7	8-725-800-00	TRANSISTOR 2SC1128
Q8	8-729-171-10	TRANSISTOR 2SA711
Q9	8-729-171-10	TRANSISTOR 2SA711
Q11	8-724-375-01	TRANSISTOR 2SC403C
Q12	8-724-375-01	TRANSISTOR 2SC403C
Q13	8-723-302-00	TRANSISTOR 2SK43-2
Q14	8-723-302-00	TRANSISTOR 2SK43-2
Q15	8-724-375-01	TRANSISTOR 2SC403C
Q16	8-724-375-01	TRANSISTOR 2SC403C
Q17	8-729-612-77	TRANSISTOR 2SA1027R
Q18	8-724-375-01	TRANSISTOR 2SC403C
Q19	8-724-375-01	TRANSISTOR 2SC403C
Q20	8-724-375-01	TRANSISTOR 2SC403C
Q21	8-724-375-01	TRANSISTOR 2SC403C
Q22	8-724-375-01	TRANSISTOR 2SC403C
Q23	8-725-412-00	TRANSISTOR 2SC1124
Q24	8-725-412-00	TRANSISTOR 2SC1124
Q25	8-724-375-01	TRANSISTOR 2SC403C
R29	1-224-940-00	RES, VAR, METAL 10K
R57	1-224-940-00	RES, VAR, METAL 10K
R83	1-214-101-00	RES, METAL 51 1% 1/4W
R86	1-214-101-00	RES, METAL 51 1% 1/4W
R88	1-214-101-00	RES, METAL 51 1% 1/4W
R89	1-214-101-00	RES, METAL 51 1% 1/4W
R90	1-214-101-00	RES, METAL 51 1% 1/4W
R91	1-214-101-00	RES, METAL 51 1% 1/4W
R96	1-214-112-00	RES, METAL 150 1% 1/4W
R97	1-214-112-00	RES, METAL 150 1% 1/4W
R100	1-214-114-00	RES, METAL 180 1% 1/4W
R101	1-214-114-00	RES, METAL 180 1% 1/4W
R102	1-214-156-00	RES, METAL 10K 1% 1/4W
R103	1-214-165-00	RES, METAL 24K 1% 1/4W
R104	1-214-116-00	RES, METAL 220 1% 1/4W
R105	1-214-116-00	RES, METAL 220 1% 1/4W
R106	1-214-116-00	RES, METAL 220 1% 1/4W
R108	1-214-123-00	RES, METAL 430 1% 1/4W
R110	1-214-128-00	RES, METAL 680 1% 1/4W
R114	1-214-128-00	RES, METAL 680 1% 1/4W
R115	1-214-166-00	RES, METAL 27K 1% 1/4W
R116	1-214-167-00	RES, METAL 30K 1% 1/4W
R117	1-214-140-00	RES, METAL 2.2K 1% 1/4W
R118	1-214-140-00	RES, METAL 2.2K 1% 1/4W
R119	1-214-127-00	RES, METAL 620 1% 1/4W
R120	1-224-944-00	RES, VAR, METAL 100
R121	1-214-108-00	RES, METAL 100 1% 1/4W
R123	1-224-937-00	RES, VAR, METAL 1K
R124	1-214-146-00	RES, METAL 3.9K 1% 1/4W
R125	1-215-136-00	RES, METAL 1.5K 1% 1/4W

Ref. No.	Part No.	Description
R126	1-224-936-00	RES, VAR, METAL 500
R127	1-214-164-00	RES, METAL 22K 1% 1/4W
R128	1-224-939-00	RES, VAR, METAL 5K
R129	1-214-160-00	RES, METAL 15K 1% 1/4W
R130	1-214-156-00	RES, METAL 10K 1% 1/4W
R131	1-214-156-00	RES, METAL 10K 1% 1/4W
R133	1-224-936-00	RES, VAR, METAL 500
R141	1-224-934-00	RES, VAR, METAL 100
R151	1-224-939-00	RES, VAR, METAL 5K
R157	1-224-939-00	RES, VAR, METAL 5K
R159	1-214-092-00	RES, METAL 22 1% 1/4W
R160	1-214-114-00	RES, METAL 180 1% 1/4W
R162	1-214-119-00	RES, METAL 300 1% 1/4W
R165	1-214-127-00	RES, METAL 620 1% 1/4W
R166	1-214-118-00	RES, METAL 270 1% 1/4W
R169	1-214-135-00	RES, METAL 1.3K 1% 1/4W
R171	1-214-142-00	RES, METAL 2.7K 1% 1/4W
R172	1-214-108-00	RES, METAL 100 1% 1/4W
R173	1-214-146-00	RES, METAL 3.9K 1% 1/4W
R174	1-214-106-00	RES, METAL 82 1% 1/4W
R175	1-214-151-00	RES, METAL 6.2K 1% 1/4W
R187	1-214-101-00	RES, METAL 51 1% 1/4W
R188	1-214-105-00	RES, METAL 75 1% 1/4W
R189	1-214-105-00	RES, METAL 75 1% 1/4W
R190	1-214-105-00	RES, METAL 75 1% 1/4W
R194	1-224-941-00	RES, VAR, METAL 20K
R195	1-224-940-00	RES, VAR, METAL 10K
R196	1-214-128-00	RES, METAL 680 1% 1/4W
R207	1-214-136-00	RES, METAL 1.5K 1% 1/4W
R208	1-214-127-00	RES, METAL 620 1% 1/4W
TH1	1-800-200-00	THERMISTOR, S-3K

Ref. No.	Part No.	Description
CN414	1-509-989-00	PLUG HOUSING, 10P, FEMALE
CN415	1-509-989-00	PLUG HOUSING, 10P, FEMALE
CN416	1-509-989-00	PLUG HOUSING, 10P, FEMALE
D1	8-719-907-03	DIODE BD703G
D2	8-719-907-03	DIODE BD703G
D3	8-719-907-01	DIODE BD701R
D4	8-719-907-03	DIODE BD703G
IC1	8-759-942-59	IC SN74259N, TTL; TI
IC2	8-759-974-47	IC SN7447AN, TTL; TI
IC3	8-759-354-51	IC HD75451AP (SN75451BP; TI)
IC4	8-759-900-32	IC SN74LS32N, TTL; TI
IC5	8-759-900-74	IC SN74LS74AN, TTL; TI
IC6	8-759-904-42	IC SN7442AN, TTL; TI
ND1	8-719-976-52	DIODE 5082-7650
ND2	8-719-976-52	DIODE 5082-7650
ND3	8-719-976-52	DIODE 5082-7650
ND4	8-719-976-52	DIODE 5082-7650
ND5	8-719-976-52	DIODE 5082-7650
ND6	8-719-976-52	DIODE 5082-7650
ND7	8-719-976-52	DIODE 5082-7650
ND8	8-719-976-52	DIODE 5082-7650
PL1	1-518-145-XX	LAMP, PILOT, 5V/60mA
Q1	8-729-374-02	TRANSISTOR 2SB740
Q2	8-729-374-02	TRANSISTOR 2SB740
Q3	8-729-374-02	TRANSISTOR 2SB740
Q4	8-729-374-02	TRANSISTOR 2SB740
Q5	8-729-374-02	TRANSISTOR 2SB740
Q6	8-729-374-02	TRANSISTOR 2SB740
Q7	8-729-374-02	TRANSISTOR 2SB740
Q8	8-729-374-02	TRANSISTOR 2SB740

DISPLAY BOARD

	A-6017-042-A	COMPLETE PCB, DISPLAY
C9	1-161-034-00	CAP, CERAMIC 0.022 20% 25V
C12	1-161-034-00	CAP, CERAMIC 0.022 20% 25V

R1	1-214-118-00	RES, METAL 270 1% 1/4W
R2	1-214-118-00	RES, METAL 270 1% 1/4W
R3	1-214-118-00	RES, METAL 270 1% 1/4W
R4	1-214-118-00	RES, METAL 270 1% 1/4W
R5	1-214-096-00	RES, METAL 33 1% 1/4W
R22	1-214-106-00	RES, METAL 82 1% 1/4W
R23	1-214-116-00	RES, METAL 220 1% 1/4W

Ref. No.	Part No.	Description
S1	1-516-994-00	SWITCH, SLIDE
S2	1-516-994-00	SWITCH, SLIDE
S3	1-552-061-00	SWITCH, SLIDE
S4	1-516-994-00	SWITCH, SLIDE
S5	1-516-995-00	SWITCH, SLIDE
S6	1-552-061-00	SWITCH, SLIDE

DRM-1 BOARD

	A-6011-050-A	COMPLETE PCB, DRM-1
	1-560-240-00	CONTACT
C1	1-102-125-00	CAP, CERAMIC 0.0047 10% 50V
C2	1-101-005-00	CAP, CERAMIC 0.022 50V
C3	1-101-005-00	CAP, CERAMIC 0.022 50V
C4	1-101-005-00	CAP, CERAMIC 0.022 50V
C5	1-101-005-00	CAP, CERAMIC 0.022 50V
C6	1-131-373-00	CAP, TANTALUM 22 10% 16V
C7	1-101-005-00	CAP, CERAMIC 0.022 50V
C8	1-131-373-00	CAP, TANTALUM 22 10% 16V
C9	1-101-005-00	CAP, CERAMIC 0.022 50V
C10	1-102-125-00	CAP, CERAMIC 0.0047 10% 50V
C11	1-101-005-00	CAP, CERAMIC 0.022 50V
C12	1-101-005-00	CAP, CERAMIC 0.022 50V
C13	1-101-005-00	CAP, CERAMIC 0.022 50V
C14	1-101-005-00	CAP, CERAMIC 0.022 50V
C15	1-131-373-00	CAP, TANTALUM 22 10% 16V
C16	1-101-005-00	CAP, CERAMIC 0.022 50V
C17	1-131-373-00	CAP, TANTALUM 22 10% 16V
C18	1-101-005-00	CAP, CERAMIC 0.022 50V
C19	1-131-373-00	CAP, TANTALUM 22 10% 16V
C20	1-131-373-00	CAP, TANTALUM 22 10% 16V
C21	1-131-380-00	CAP, TANTALUM 33 10% 10V
D1	8-719-900-95	DIODE V09G
D2	8-719-109-07	DIODE RD39E-B
D3	8-719-109-07	DIODE RD39E-B
D4	8-719-900-95	DIODE V09G
IC1	8-759-377-43	IC HA17741GS (μA741TC; FSC)

Ref. No.	Part No.	Description
L1	1-407-177-XX	INDUCTOR MICRO 470
L2	1-407-177-XX	INDUCTOR MICRO 470
L3	1-407-177-XX	INDUCTOR MICRO 470
L4	1-407-177-XX	INDUCTOR MICRO 470
L5	1-407-177-XX	INDUCTOR MICRO 470
L6	1-407-177-XX	INDUCTOR MICRO 470
L7	1-407-177-XX	INDUCTOR MICRO 470
Q1	8-765-410-00	TRANSISTOR 2SC2213
Q2	8-765-422-00	TRANSISTOR 2SK152-2
Q3	8-729-023-69	TRANSISTOR 2N2369A
Q4	8-765-410-00	TRANSISTOR 2SC2213
Q5	8-765-422-00	TRANSISTOR 2SK152-2
Q6	8-729-023-69	TRANSISTOR 2N2369A
Q7	8-723-304-00	TRANSISTOR 2SK43-4
Q8	8-723-304-00	TRANSISTOR 2SK43-4
Q9	8-723-304-00	TRANSISTOR 2SK43-4
R1	1-214-164-00	RES, METAL 22K 1% 1/4W
R2	1-214-148-00	RES, METAL 4.7K 1% 1/4W
R3	1-214-148-00	RES, METAL 4.7K 1% 1/4W
R4	1-214-084-00	RES, METAL 10 1% 1/4W
R5	1-214-130-00	RES, METAL 820 1% 1/4W
R6	1-214-108-00	RES, METAL 100 1% 1/4W
R7	1-214-120-00	RES, METAL 330 1% 1/4W
R8	1-214-108-00	RES, METAL 100 1% 1/4W
R9	1-214-140-00	RES, METAL 2.2K 1% 1/4W
R10	1-214-164-00	RES, METAL 22K 1% 1/4W
R11	1-214-148-00	RES, METAL 4.7K 1% 1/4W
R12	1-214-148-00	RES, METAL 4.7K 1% 1/4W
R13	1-214-084-00	RES, METAL 10 1% 1/4W
R14	1-214-130-00	RES, METAL 820 1% 1/4W
R15	1-214-108-00	RES, METAL 100 1% 1/4W
R16	1-214-120-00	RES, METAL 330 1% 1/4W
R17	1-214-108-00	RES, METAL 100 1% 1/4W
R18	1-214-140-00	RES, METAL 2.2K 1% 1/4W
R19	1-214-132-00	RES, METAL 1K 1% 1/4W
R20	1-214-180-00	RES, METAL 100K 1% 1/4W
R21	1-214-180-00	RES, METAL 100K 1% 1/4W
R22	1-214-084-00	RES, METAL 10 1% 1/4W
T1	1-426-010-00	TRANSFORMER, RF INPUT
T2	1-426-010-00	TRANSFORMER, RF INPUT

DRM-4 BOARD

Ref. No.	Part No.	Description
	A-6011-053-A	COMPLETE PCB, DRM-4
	1-560-240-00	CONTACT
C1	1-102-125-00	CAP, CERAMIC 0.0047 10% 50V
C2	1-101-005-00	CAP, CERAMIC 0.022 50V
C3	1-101-005-00	CAP, CERAMIC 0.022 50V
C4	1-101-005-00	CAP, CERAMIC 0.022 50V
C5	1-131-373-00	CAP, TANTALUM 22 10% 16V
C6	1-131-373-00	CAP, TANTALUM 22 10% 16V
C7	1-101-005-00	CAP, CERAMIC 0.022 50V
C8	1-101-005-00	CAP, CERAMIC 0.022 50V
C9	1-101-005-00	CAP, CERAMIC 0.022 50V
C10	1-102-125-00	CAP, CERAMIC 0.0047 10% 50V
C11	1-101-005-00	CAP, CERAMIC 0.022 50V
C12	1-101-005-00	CAP, CERAMIC 0.022 50V
C13	1-101-005-00	CAP, CERAMIC 0.022 50V
C14	1-131-373-00	CAP, TANTALUM 22 10% 16V
C15	1-131-373-00	CAP, TANTALUM 22 10% 16V
C16	1-101-005-00	CAP, CERAMIC 0.022 50V
C17	1-101-005-00	CAP, CERAMIC 0.022 50V
C18	1-101-005-00	CAP, CERAMIC 0.022 50V
C19	1-101-005-00	CAP, CERAMIC 0.022 50V
C20	1-101-005-00	CAP, CERAMIC 0.022 50V
C21	1-131-373-00	CAP, TANTALUM 22 10% 16V
C22	1-101-005-00	CAP, CERAMIC 0.022 50V
C23	1-101-005-00	CAP, CERAMIC 0.022 50V
C24	1-131-373-00	CAP, TANTALUM 22 10% 16V
C25	1-101-005-00	CAP, CERAMIC 0.022 50V
C26	1-101-005-00	CAP, CERAMIC 0.022 50V
C27	1-131-373-00	CAP, TANTALUM 22 10% 16V
C28	1-101-005-00	CAP, CERAMIC 0.022 50V
C29	1-101-005-00	CAP, CERAMIC 0.022 50V
C30	1-131-373-00	CAP, TANTALUM 22 10% 16V
D1	8-719-815-55	DIODE 1S1555
L1	1-407-177-XX	INDUCTOR MICRO 470
L2	1-407-177-XX	INDUCTOR MICRO 470
L3	1-407-177-XX	INDUCTOR MICRO 470
L4	1-407-177-XX	INDUCTOR MICRO 470
L5	1-407-177-XX	INDUCTOR MICRO 470
L6	1-407-177-XX	INDUCTOR MICRO 470
L7	1-407-177-XX	INDUCTOR MICRO 470
L8	1-407-177-XX	INDUCTOR MICRO 470
L9	1-407-177-XX	INDUCTOR MICRO 470
L10	1-407-177-XX	INDUCTOR MICRO 470
Q1	8-765-410-00	TRANSISTOR 2SC2213
Q2	8-765-422-00	TRANSISTOR 2SK152-2
Q3	8-729-023-69	TRANSISTOR 2N2369A
Q4	8-765-410-00	TRANSISTOR 2SC2213
Q5	8-765-422-00	TRANSISTOR 2SK152-2
Q6	8-729-023-69	TRANSISTOR 2N2369A
Q7	8-729-023-69	TRANSISTOR 2N2369A
Q8	8-729-023-69	TRANSISTOR 2N2369A
R1	1-214-164-00	RES, METAL 22K 1% 1/4W
R2	1-214-148-00	RES, METAL 4.7K 1% 1/4W
R3	1-214-148-00	RES, METAL 4.7K 1% 1/4W
R4	1-214-084-00	RES, METAL 10 1% 1/4W
R5	1-214-130-00	RES, METAL 820 1% 1/4W
R6	1-214-108-00	RES, METAL 100 1% 1/4W
R7	1-214-120-00	RES, METAL 330 1% 1/4W
R8	1-214-108-00	RES, METAL 100 1% 1/4W
R9	1-214-140-00	RES, METAL 2.2K 1% 1/4W
R10	1-214-100-00	RES, METAL 47 1% 1/4W
R11	1-214-164-00	RES, METAL 22K 1% 1/4W
R12	1-214-148-00	RES, METAL 4.7K 1% 1/4W
R13	1-214-148-00	RES, METAL 4.7K 1% 1/4W
R14	1-214-084-00	RES, METAL 10 1% 1/4W
R15	1-214-130-00	RES, METAL 820 1% 1/4W
R16	1-214-108-00	RES, METAL 100 1% 1/4W
R17	1-214-120-00	RES, METAL 330 1% 1/4W
R18	1-214-108-00	RES, METAL 100 1% 1/4W
R19	1-214-140-00	RES, METAL 2.2K 1% 1/4W
R20	1-214-100-00	RES, METAL 47 1% 1/4W
R21	1-214-132-00	RES, METAL 1K 1% 1/4W
R22	1-214-100-00	RES, METAL 47 1% 1/4W
R23	1-214-132-00	RES, METAL 1K 1% 1/4W
R24	1-214-100-00	RES, METAL 47 1% 1/4W
R25	1-214-140-00	RES, METAL 2.2K 1% 1/4W
R26	1-214-140-00	RES, METAL 2.2K 1% 1/4W
R27	1-214-115-00	RES, METAL 200 1% 1/4W
R28	1-214-115-00	RES, METAL 200 1% 1/4W
RY1	1-515-309-21	RELAY, 5V/200Ω
RY2	1-515-309-21	RELAY, 5V/200Ω
T1	1-426-010-00	TRANSFORMER, RF INPUT
T2	1-426-010-00	TRANSFORMER, RF INPUT

DRUM BOARD

Ref. No.	Part No.	Description
	A-6015-038-A	COMPLETE PCB, DRUM (NTSC, PM)
	A-6015-039-A	COMPLETE PCB, DRUM (PS)
C1	1-107-082-00	CAP, MICA 75PF 5% 50V
C2	1-107-085-00	CAP, MICA 100PF 5% 50V
C6	1-131-351-00	CAP, TANTALUM 4.7 10% 35V
C9	1-131-387-00	CAP, TANTALUM 47 10% 6.3V
C12	1-131-427-00	CAP, TANTALUM 220 20% 6.3V
C13	1-109-642-00	CAP, MICA 0.0022 2% 500V
C14	1-109-561-00	CAP, MICA 0.001 5% 100V
C15	1-107-093-00	CAP, MICA 220PF 5% 50V
C16	1-107-085-00	CAP, MICA 100PF 5% 50V
C20	1-109-743-00	CAP, MICA 0.0068 1% 100V
C21	1-161-036-00	CAP, CERAMIC 0.047 20% 25V
C22	1-161-036-00	CAP, CERAMIC 0.047 20% 25V
C24	1-131-428-00	CAP, TANTALUM 100 20% 10V
C25	1-131-352-00	CAP, TANTALUM 6.8 10% 35V
C26	1-131-352-00	CAP, TANTALUM 6.8 10% 35V
C27	1-109-601-00	CAP, MICA 0.01 1% 500V
C28	1-109-601-00	CAP, MICA 0.01 1% 500V
C29	1-109-539-00	CAP, MICA 150PF 5% 100V
C29	1-109-555-00	CAP, MICA 560PF 5% 100V
C29	1-109-601-00	CAP, MICA 0.01 1% 500V
C33	1-131-428-00	CAP, TANTALUM 100 20% 10V
C37	1-107-087-00	CAP, MICA 120PF 5% 50V
C42	1-131-402-00	CAP, TANTALUM 0.1 10% 35V
C43	1-131-356-00	CAP, TANTALUM 3.3 10% 25V
C46	1-161-036-00	CAP, CERAMIC 0.047 20% 25V
C47	1-161-036-00	CAP, CERAMIC 0.047 20% 25V
C48	1-161-036-00	CAP, CERAMIC 0.047 20% 25V
C49	1-161-036-00	CAP, CERAMIC 0.047 20% 25V
C50	1-161-036-00	CAP, CERAMIC 0.047 20% 25V
C52	1-161-036-00	CAP, CERAMIC 0.047 20% 25V
C54	1-161-036-00	CAP, CERAMIC 0.047 20% 25V
C56	1-161-036-00	CAP, CERAMIC 0.047 20% 25V
C58	1-161-036-00	CAP, CERAMIC 0.047 20% 25V
C60	1-107-087-00	CAP, MICA 120PF 5% 50V
C61	1-107-078-00	CAP, MICA 51PF 5% 50V
C62	1-131-408-00	CAP, TANTALUM 1 10% 35V
C63	1-102-114-00	CAP, CERAMIC 470PF 10% 50V

Ref. No.	Part No.	Description
D1	8-719-815-55	DIODE 1S1555
D2	8-719-815-55	DIODE 1S1555
D3	8-719-815-55	DIODE 1S1555
D4	8-719-815-55	DIODE 1S1555
D5	8-719-815-55	DIODE 1S1555
D6	8-719-815-55	DIODE 1S1555
IC1	8-759-377-47	IC HA17747G (μA747DC; FSC)
IC2	8-759-275-06	IC TA7506M (LM301AH; NSC)
IC3	8-759-275-06	IC TA7506M (LM301AH; NSC)
IC4	8-759-900-74	IC SN74LS74AN, TTL; TI
IC5	8-759-901-91	IC SN74LS191N, TTL; TI
IC6	8-759-901-91	IC SN74LS191N, TTL; TI
IC7	8-759-901-91	IC SN74LS191N, TTL; TI
IC8	8-719-901-91	IC SN74LS191N, TTL; TI
IC9	8-719-901-91	IC SN74LS191N, TTL; TI
IC10	8-719-901-91	IC SN74LS191N, TTL; TI
IC11	8-759-902-93	IC SN74LS293N, TTL; TI
IC12	8-759-900-00	IC SN74LS00N, TTL; TI
IC13	8-759-900-04	IC SN74LS04N, TTL; TI
IC14	8-759-900-04	IC SN74LS04N, TTL; TI
IC15	8-759-900-33	IC SN74LS33N, TTL; TI
IC16	8-759-902-21	IC SN74LS221N, TTL; TI
IC17	8-759-902-21	IC SN74LS221N, TTL; TI
IC18	8-759-902-21	IC SN74LS221N, TTL; TI
IC19	8-759-994-74	IC MM74C74N, C-MOS; NSC
IC20	8-759-900-74	IC SN74LS74AN, TTL; TI
IC21	8-759-902-21	IC SN74LS221N, TTL; TI
IC22	8-759-902-21	IC SN74LS221N, TTL; TI
IC23	8-759-901-53	IC SN74LS153N, TTL; TI
IC24	8-759-900-00	IC SN74LS00N, TTL; TI
IC25	8-759-900-14	IC SN74LS14N, TTL; TI
IC26	8-759-900-86	IC SN74LS86N, TTL; TI
IC27	8-759-941-07	IC SN74107N, TTL; TI
IC28	8-759-900-92	IC SN74LS92N, TTL; TI
IC29	8-759-900-74	IC SN74LS74AN, TTL; TI
IC30	8-759-900-74	IC SN74LS74AN, TTL; TI
IC31	8-759-991-23	IC SN74LS123NS, TTL; TI
IC32	8-759-901-58	IC SN74LS158N, TTL; TI
IC33	8-759-900-03	IC SN74LS03N, TTL; TI
IC34	8-759-900-05	IC SN74LS05N, TTL; TI
IC35	8-759-632-06	IC M53206P, TTL (SN7406N; TI)
IC36	8-759-902-21	IC SN74LS221N, TTL; TI
IC37	8-759-900-00	IC SN74LS00N, TTL; TI

Ref. No.	Part No.	Description
L1	1-409-309-00	COIL, TOROIDAL
Q1	8-729-612-77	TRANSISTOR 2SA1027R
Q2	8-729-612-77	TRANSISTOR 2SA1027R
Q3	8-729-612-77	TRANSISTOR 2SA1027R
Q4	8-729-663-47	TRANSISTOR 2SC1364
Q5	8-761-622-00	TRANSISTOR 2SC1636
Q6	8-723-302-00	TRANSISTOR 2SK43-2
Q7	8-723-302-00	TRANSISTOR 2SK43-2
Q8	8-729-663-47	TRANSISTOR 2SC1364
Q9	8-729-612-77	TRANSISTOR 2SA1027R
Q10	8-729-663-47	TRANSISTOR 2SC1364
Q11	8-729-663-47	TRANSISTOR 2SC1364
Q12	8-729-663-47	TRANSISTOR 2SC1364
Q13	8-723-302-00	TRANSISTOR 2SK43-2
Q14	8-729-663-47	TRANSISTOR 2SC1364
Q15	8-729-612-77	TRANSISTOR 2SA1027R
Q16	8-729-663-47	TRANSISTOR 2SC1364
Q17	8-729-663-47	TRANSISTOR 2SC1364
Q18	8-729-612-77	TRANSISTOR 2SA1027R
Q19	8-729-612-77	TRANSISTOR 2SA1027R
Q20	8-729-364-12	TRANSISTOR 2SC641K
R15	1-214-172-00	RES, METAL 47K 1% 1/4W
R16	1-224-941-00	RES, VAR, METAL 20K
R17	1-214-160-00	RES, METAL 15K 1% 1/4W
R18	1-224-941-00	RES, VAR, METAL 20K
R24	1-214-139-00	RES, METAL 2K 1% 1/4W
R25	1-214-160-00	RES, METAL 15K 1% 1/4W
R26	1-214-143-00	RES, METAL 3K 1% 1/4W
R40	1-214-143-00	RES, METAL 3K 1% 1/4W
R41	1-212-180-00	RES, METAL 100K 1% 1/2W (NTSC, PM)
R41	1-212-704-00	RES, METAL 120K 1% 1/2W (PS)
R42	1-212-180-00	RES, METAL 100K 1% 1/2W (NTSC, PM)
R42	1-212-704-00	RES, METAL 120K 1% 1/2W (PS)
R43	1-224-939-00	RES, VAR, METAL 5K
R44	1-214-143-00	RES, METAL 3K 1% 1/4W
R46	1-214-143-00	RES, METAL 3K 1% 1/4W
R64	1-214-156-00	RES, METAL 10K 1% 1/4W
R65	1-214-156-00	RES, METAL 10K 1% 1/4W
R66	1-214-156-00	RES, METAL 10K 1% 1/4W
R67	1-214-156-00	RES, METAL 10K 1% 1/4W
SW1	1-552-101-00	SWITCH, SLIDE

Ref. No.	Part No.	Description
X1	1-527-227-00	CRYSTAL 14.31818MHz

DT-1 BOARD

	A-6263-021-D	COMPLETE PCB, DT-1 (NTSC, PM)
	A-6263-022-E	COMPLETE PCB, DT-1 (PS)
C1	1-109-540-00	CAP, MICA 180PF 5% 100V
C2	1-109-547-00	CAP, MICA 330PF 5% 100V
C3	1-109-561-00	CAP, MICA 0.001 5% 100V
C4	1-109-542-00	CAP, MICA 220PF 5% 100V
C5	1-131-405-00	CAP, TANTALUM 0.33 10% 35V
C6	1-109-561-00	CAP, MICA 0.001 5% 100V
C7	1-109-558-00	CAP, MICA 750PF 5% 100V
C8	1-109-558-00	CAP, MICA 750PF 5% 100V
C9	1-131-403-00	CAP, TANTALUM 0.15 10% 35V
C10	1-131-359-00	CAP, TANTALUM 10 10% 25V
C11	1-131-359-00	CAP, TANTALUM 10 10% 25V
C12	1-131-359-00	CAP, TANTALUM 10 10% 25V
C13	1-131-359-00	CAP, TANTALUM 10 10% 25V
C21	1-161-034-00	CAP, CERAMIC 0.022 20% 25V
C22	1-161-034-00	CAP, CERAMIC 0.022 20% 25V
C23	1-161-034-00	CAP, CERAMIC 0.022 20% 25V
C24	1-161-034-00	CAP, CERAMIC 0.022 20% 25V
C25	1-161-034-00	CAP, CERAMIC 0.022 20% 25V
C26	1-161-034-00	CAP, CERAMIC 0.022 20% 25V
C27	1-161-034-00	CAP, CERAMIC 0.022 20% 25V
C28	1-161-034-00	CAP, CERAMIC 0.022 20% 25V
C29	1-161-034-00	CAP, CERAMIC 0.022 20% 25V
C32	1-109-561-00	CAP, MICA 0.001 5% 100V
C33	1-131-405-00	CAP, TANTALUM 0.33 10% 35V
C36	1-131-348-00	CAP, TANTALUM 1.5 10% 35V
C37	1-131-349-00	CAP, TANTALUM 2.2 10% 35V
C38	1-131-405-00	CAP, TANTALUM 0.33 10% 35V
C39	1-131-407-00	CAP, TANTALUM 0.68 10% 35V
C40	1-102-106-00	CAP, CERAMIC 100PF 10% 50V
C41	1-102-106-00	CAP, CERAMIC 100PF 10% 50V
C42	1-131-359-00	CAP, TANTALUM 10 10% 25V
D1	8-719-815-55	DIODE 1S1555
D2	8-719-815-55	DIODE 1S1555

Ref. No.	Part No.	Description
IC5	8-759-240-13	IC TC4013BP, C-MOS (CD4013BE; RCA)
IC9	8-759-990-04	IC TL074CN; TI
IC10	8-759-240-02	IC TC4002BP, C-MOS (CD4002BE; RCA)
IC11	8-759-900-02	IC SN74LS02N, TTL; TI
IC12	8-759-045-84	IC MC14584BCP, C-MOS; (MOTOROLA)
IC14	8-759-901-53	IC SN74LS153N, TTL; TI
IC15	8-759-900-11	IC SN74LS11N, TTL; TI (PS ONLY)
IC16	8-759-632-06	IC M53206P, TTL (SN7406N; TI)
IC18	8-759-901-64	IC SN74LS164N, TTL; TI
IC19	8-759-901-53	IC SN74LS153N, TTL; TI
IC20	8-759-900-08	IC SN74LS08N, TTL; TI (NTSC, PM)
IC21	8-759-900-02	IC SN74LS02N, TTL; TI
IC22	8-759-900-00	IC SN74LS00N, TTL; TI
IC23	8-759-900-14	IC SN74LS14N, TTL; TI
IC24	8-759-903-90	IC SN74LS390N, TTL; TI
IC25	8-759-900-00	IC SN74LS00N, TTL; TI
IC26	8-759-900-08	IC SN74LS08N, TTL; TI (PS ONLY)
IC27	8-759-902-21	IC SN74LS221N, TTL; TI
IC28	8-759-900-74	IC SN74LS74AN, TTL; TI
IC29	8-759-900-00	IC SN74LS00N, TTL; TI
IC30	8-759-903-90	IC SN74LS390N, TTL; TI
IC31	8-759-902-21	IC SN74LS221N, TTL; TI
IC32	8-759-902-21	IC SN74LS221N, TTL; TI
IC33	8-759-902-21	IC SN74LS221N, TTL; TI
IC34	8-759-900-74	IC SN74LS74AN, TTL; TI
IC35	8-759-240-11	IC TC4011BP, C-MOS (CD4011BE; RCA)
IC36	8-759-902-21	IC SN74LS221N, TTL; TI
IC37	8-759-900-74	IC SN74LS74AN, TTL; TI
IC38	8-759-903-93	IC SN74LS393N, TTL; TI
IC39	8-759-900-10	IC SN74LS10N, TTL; TI
IC40	8-759-045-38	IC MC14538BCP, C-MOS; MOTOROLA
IC41	8-759-045-38	IC MC14538BCP, C-MOS; MOTOROLA
IC43	8-759-900-86	IC SN74LS86N, TTL; TI (PS ONLY)
IC44	8-759-900-04	IC SN74LS04N, TTL; TI (PS ONLY)
IC45	8-759-901-63	IC SN74LS163AN, TTL; TI (PS ONLY)
IC46	8-759-900-02	IC SN74LS02N, TTL; TI (PS ONLY)
IC47	8-759-901-75	IC SN74LS175N, TTL; TI (PS ONLY)
IC48	8-759-900-74	IC SN74LS74AN, TTL; TI
IC49	8-759-991-23	IC SN74LS123NS, TTL; TI

Ref. No.	Part No.	Description
R1	1-214-156-00	RES, METAL 10K 1% 1/4W
R2	1-214-156-00	RES, METAL 10K 1% 1/4W
R3	1-214-170-00	RES, METAL 39K 1% 1/4W
R4	1-224-940-00	RES, VAR, METAL 10K
R5	1-214-156-00	RES, METAL 10K 1% 1/4W
R6	1-214-172-00	RES, METAL 47K 1% 1/4W
R7	1-214-156-00	RES, METAL 10K 1% 1/4W
R8	1-214-163-00	RES, METAL 20K 1% 1/4W
R9	1-214-163-00	RES, METAL 20K 1% 1/4W
R10	1-214-164-00	RES, METAL 22K 1% 1/4W
R12	1-214-180-00	RES, METAL 100K 1% 1/4W
R13	1-224-943-00	RES, VAR, METAL 100K
R14	1-214-180-00	RES, METAL 100K 1% 1/4W
R15	1-214-180-00	RES, METAL 100K 1% 1/4W
R16	1-214-180-00	RES, METAL 100K 1% 1/4W
R18	1-214-164-00	RES, METAL 22K 1% 1/4W
R20	1-214-180-00	RES, METAL 100K 1% 1/4W
R43	1-214-132-00	RES, METAL 1K 1% 1/4W
R44	1-214-157-00	RES, METAL 11K 1% 1/4W
R45	1-214-172-00	RES, METAL 47K 1% 1/4W
R46	1-214-132-00	RES, METAL 1K 1% 1/4W
R47	1-214-136-00	RES, METAL 1.5K 1% 1/4W
R48	1-214-132-00	RES, METAL 1K 1% 1/4W
R49	1-214-170-00	RES, METAL 39K 1% 1/4W
R50	1-224-941-00	RES, VAR, MEATL 20K
R51	1-214-180-00	RES, METAL 100K 1% 1/4W
R53	1-214-168-00	RES, METAL 33K 1% 1/4W
R54	1-224-941-00	RES, VAR, METAL FILM 20K
R55	1-214-180-00	RES, METAL 100K 1% 1/4W
R57	1-214-154-00	RES, METAL 8.2K 1% 1/4W
R58	1-214-141-00	RES, METAL 2.4K 1% 1/4W
R59	1-214-139-00	RES, METAL 2K 1% 1/4W
R60	1-214-180-00	RES, METAL 100K 1% 1/4W
R61	1-214-180-00	RES, METAL 100K 1% 1/4W
RB1	1-231-405-00	RESISTOR BLOCK 1K x 8
SW1	1-552-101-00	SWITCH, SLIDE

DT-2 BOARD

Ref. No.	Part No.	Description
	A-6263-023-A	COMPLETE PCB, DT-2 (NTSC, PM)
	A-6263-024-A	COMPLETE PCB, DT-2 (PS)
C1	1-107-077-00	CAP, MICA 47PF 5% 50V
C2	1-107-077-00	CAP, MICA 47PF 5% 50V
C3	1-131-351-00	CAP, TANTALUM 4.7 10% 35V
C6	1-131-351-00	CAP, TANTALUM 4.7 10% 35V
C7	1-131-359-00	CAP, TANTALUM 10 10% 25V
C8	1-131-359-00	CAP, TANTALUM 10 10% 25V
C9	1-131-359-00	CAP, TANTALUM 10 10% 25V
C10	1-107-065-00	CAP, MICA 15PF 5% 50V
C11	1-107-065-00	CAP, MICA 15PF 5% 50V
C12	1-131-350-00	CAP, TANTALUM 3.3 10% 35V
C13	1-131-350-00	CAP, TANTALUM 3.3 10% 35V
C17	1-131-403-00	CAP, TANTALUM 0.15 10% 35V
C18	1-131-403-00	CAP, TANTALUM 0.15 10% 35V
C19	1-131-406-00	CAP, TANTALUM 0.47 10% 35V
C23	1-131-406-00	CAP, TANTALUM 0.47 10% 35V
C24	1-131-406-00	CAP, TANTALUM 0.47 10% 35V
C25	1-131-406-00	CAP, TANTALUM 0.47 10% 35V
C30	1-131-387-00	CAP, TANTALUM 47 10% 6.3V
C35	1-131-359-00	CAP, TANTALUM 10 10% 25V
C43	1-131-351-00	CAP, TANTALUM 4.7 10% 35V
C47	1-131-387-00	CAP, TANTALUM 47 10% 6.3V
C49	1-131-404-00	CAP, TANTALUM 0.22 10% 35V
C50	1-131-404-00	CAP, TANTALUM 0.22 10% 35V
C51	1-131-403-00	CAP, TANTALUM 0.15 10% 35V
C52	1-131-403-00	CAP, TANTALUM 0.15 10% 35V
C53	1-108-555-00	CAP, MYLAR 0.001 5% 50V
C54	1-131-402-00	CAP, TANTALUM 0.1 10% 35V
C55	1-131-352-00	CAP, TANTALUM 6.8 10% 35V
C56	1-108-555-00	CAP, MYLAR 0.001 5% 50V
C57	1-101-003-00	CAP, CERAMIC 0.0047 50V
C58	1-101-003-00	CAP, CERAMIC 0.0047 50V
D1	8-719-815-55	DIODE 1S1555
D2	8-719-815-55	DIODE 1S1555
D3	8-719-815-55	DIODE 1S1555
D4	8-719-815-55	DIODE 1S1555
D5	8-719-815-55	DIODE 1S1555
D6	8-719-815-55	DIODE 1S1555
D7	8-719-815-55	DIODE 1S1555
D8	8-719-815-55	DIODE 1S1555
D9	8-719-815-55	DIODE 1S1555
D10	8-719-815-55	DIODE 1S1555
D11	8-719-815-55	DIODE 1S1555
D12	8-719-815-55	DIODE 1S1555
D13	8-719-815-55	DIODE 1S1555
D14	8-719-815-55	DIODE 1S1555

Ref. No.	Part No.	Description
IC1	8-759-901-75	IC SN74LS175N, TTL; TI
IC2	8-759-901-91	IC SN74LS191N, TTL; TI
IC3	8-759-900-20	IC SN74LS20N, TTL; TI
IC4	8-759-900-02	IC SN74LS02N, TTL; TI
IC5	8-759-941-91	IC SN74191N, TTL; TI
IC6	8-759-900-74	IC SN74LS74AN, TTL; TI
IC7	8-759-900-04	IC SN74LS04N, TTL; TI
IC8	8-759-901-75	IC SN75LS175N, TTL; TI
IC9	8-759-902-21	IC SN74LS221N, TTL; TI
IC10	8-759-903-93	IC SN74LS393N, TTL; TI
IC11	8-759-901-91	IC SN74LS191N, TTL; TI
IC12	8-759-901-91	IC SN74LS191N, TTL; TI
IC13	8-759-941-91	IC SN74191N, TTL; TI
IC14	8-759-901-75	IC SN75LS175N, TTL; TI
IC15	8-759-902-21	IC SN74LS221N, TTL; TI
IC16	8-759-041-75	IC MC14175BCP, C-MOS; MOTOROLA
IC17	8-759-901-74	IC SN74LS174N, TTL; TI
IC18	8-759-901-74	IC SN74LS174N, TTL; TI
IC19	8-759-980-02	IC DACIC8BC; DATEL
IC20	8-759-980-02	IC DACIC8BC; DATEL
IC21	8-759-045-26	IC MC14526BCP, C-MOS MOTOROLA
IC22	8-759-990-74	IC TL074ACN; TI
IC23	8-759-374-58	IC HA17458GS (LM1458N; NSC)
IC24	8-759-374-58	IC HA17458GS (LM1458N; NSC)
IC25	8-759-374-58	IC HA17458GS (LM1458N; NSC)
IC26	8-759-040-46	IC MC14046BCP, C-MOS; MOTOROLA
IC27	8-759-990-74	IC TL074ACN; TI
IC28	8-759-374-58	IC HA17458GS (LM1458N; NSC)
IC29	8-759-921-91	IC TL191CN; TI
IC30	8-759-374-58	IC HA17458GS (LM1458N; NSC)
IC31	8-759-374-58	IC HA17458GS (LM1458N; NSC)
IC32	8-759-374-58	IC HA17458GS (LM1458N; NSC)
IC33	8-759-921-91	IC TL191CN; TI
IC34	8-759-990-72	IC TL072CP; TI
IC35	8-759-374-58	IC HA17458GS (LM1458N; NSC)
IC36	8-759-990-74	IC TL074ACN; TI
IC37	8-759-374-58	IC HA17458GS (LM1458N; NSC)
IC38	8-759-374-58	IC HA17458GS (LM1458N; NSC)
IC39	8-759-907-93	IC μA796HC-B
IC40	8-759-374-58	IC HA17458GS (LM1458N; NSC)
IC41	8-759-900-00	IC SN74LS00N, TTL; TI
IC42	8-759-990-72	IC TL072CP, TI
IC43	8-759-900-74	IC SN74LS74AN, TTL; TI
L1	1-407-157-XX	INDUCTOR MICRO 10
L2	1-407-157-XX	INDUCTOR MICRO 10
L3	1-407-157-XX	INDUCTOR MICRO 10
L4	1-407-157-XX	INDUCTOR MICRO 10

Ref. No.	Part No.	Description
Q1	8-729-368-90	TRANSISTOR 2SC689H
Q2	8-761-622-00	TRANSISTOR 2SC1636
Q3	8-761-622-00	TRANSISTOR 2SC1636
R1	1-214-164-00	RES, METAL 22K 1% 1/4W
R2	1-214-124-00	RES, METAL 470 1% 1/4W
R5	1-214-132-00	RES, METAL 1K 1% 1/4W
R6	1-214-132-00	RES, METAL 1K 1% 1/4W
R7	1-214-156-00	RES, METAL 10K 1% 1/4W
R8	1-214-139-00	RES, METAL 2K 1% 1/4W
R9	1-214-139-00	RES, METAL 2K 1% 1/4W
R10	1-214-139-00	RES, METAL 2K 1% 1/4W
R11	1-214-149-00	RES, METAL 5.1K 1% 1/4W (NTSC, PM)
R11	1-214-147-00	RES, METAL 4.3K 1% 1/4W (PS)
R12	1-224-941-00	RES, VAR, METAL 20K
R13	1-214-156-00	RES, METAL 10K 1% 1/4W
R14	1-214-156-00	RES, METAL 10K 1% 1/4W
R15	1-214-156-00	RES, METAL 10K 1% 1/4W
R16	1-214-156-00	RES, METAL 10K 1% 1/4W
R17	1-214-156-00	RES, METAL 10K 1% 1/4W
R18	1-214-156-00	RES, METAL 10K 1% 1/4W
R19	1-214-156-00	RES, METAL 10K 1% 1/4W
R20	1-214-156-00	RES, METAL 10K 1% 1/4W
R21	1-214-156-00	RES, METAL 10K 1% 1/4W
R22	1-214-156-00	RES, METAL 10K 1% 1/4W
R23	1-214-156-00	RES, METAL 10K 1% 1/4W
R24	1-214-156-00	RES, METAL 10K 1% 1/4W
R25	1-224-939-00	RES, VAR, METAL 5K
R26	1-224-939-00	RES, VAR, METAL 5K
R27	1-224-939-00	RES, VAR, METAL 5K
R28	1-224-939-00	RES, VAR, METAL 5K
R29	1-214-132-00	RES, METAL 1K 1% 1/4W
R30	1-214-132-00	RES, METAL 1K 1% 1/4W
R31	1-214-132-00	RES, METAL 1K 1% 1/4W
R32	1-214-132-00	RES, METAL 1K 1% 1/4W
R33	1-214-180-00	RES, METAL 100K 1% 1/4W
R34	1-214-180-00	RES, METAL 100K 1% 1/4W
R35	1-214-180-00	RES, METAL 100K 1% 1/4W
R36	1-214-180-00	RES, METAL 100K 1% 1/4W
R37	1-214-167-00	RES, METAL 30K 1% 1/4W
R38	1-214-167-00	RES, METAL 30K 1% 1/4W
R39	1-214-167-00	RES, METAL 30K 1% 1/4W
R40	1-214-167-00	RES, METAL 30K 1% 1/4W
R41	1-214-167-00	RES, METAL 30K 1% 1/4W
R42	1-214-132-00	RES, METAL 1K 1% 1/4W
R43	1-214-132-00	RES, METAL 1K 1% 1/4W
R44	1-214-139-00	RES, METAL 2K 1% 1/4W
R45	1-214-149-00	RES, METAL 5.1K 1% 1/4W (NTSC, PM)
R45	1-214-145-00	RES, METAL 3.6K 1% 1/4W (PS)

Ref. No.	Part No.	Description
R46	1-214-172-00	RES, METAL 47K 1% 1/4W
R47	1-214-179-00	RES, METAL 91K 1% 1/4W
R48	1-214-164-00	RES, METAL 22K 1% 1/4W
R49	1-214-162-00	RES, METAL 18K 1% 1/4W
R50	1-224-941-00	RES, VAR, METAL 20K
R51	1-214-162-00	RES, METAL 18K 1% 1/4W
R52	1-224-940-00	RES, VAR, METAL 10K
R53	1-214-162-00	RES, METAL 18K 1% 1/4W
R54	1-214-156-00	RES, METAL 10K 1% 1/4W
R55	1-224-940-00	RES, VAR, METAL 10K
R56	1-214-156-00	RES, METAL 10K 1% 1/4W
R57	1-224-938-00	RES, VAR, METAL 2K
R59	1-214-161-00	RES, METAL 16K 1% 1/4W
R60	1-214-167-00	RES, METAL 30K 1% 1/4W
R61	1-214-158-00	RES, METAL 12K 1% 1/4W
R62	1-224-940-00	RES, VAR, METAL 10K
R63	1-214-156-00	RES, METAL 10K 1% 1/4W
R64	1-214-156-00	RES, METAL 10K 1% 1/4W
R65	1-224-942-00	RES, VAR, METAL 50K
R66	1-214-178-00	RES, METAL 82K 1% 1/4W
R67	1-214-178-00	RES, METAL 82K 1% 1/4W
R68	1-214-156-00	RES, METAL 10K 1% 1/4W
R69	1-214-108-00	RES, METAL 100 1% 1/4W (PS ONLY)
R70	1-214-180-00	RES, METAL 100K 1% 1/4W
R71	1-214-156-00	RES, METAL 10K 1% 1/4W
R72	1-214-180-00	RES, METAL 100K 1% 1/4W
R73	1-214-144-00	RES, METAL 3.3K 1% 1/4W
R74	1-214-180-00	RES, METAL 100K 1% 1/4W
R75	1-214-160-00	RES, METAL 15K 1% 1/4W
R76	1-214-160-00	RES, METAL 15K 1% 1/4W
R77	1-214-156-00	RES, METAL 10K 1% 1/4W
R78	1-224-941-00	RES, VAR, METAL 20K
R79	1-214-156-00	RES, METAL 10K 1% 1/4W
R80	1-214-108-00	RES, METAL 100 1% 1/4W
R81	1-214-108-00	RES, METAL 100 1% 1/4W
R82	1-214-108-00	RES, METAL 100 1% 1/4W
R83	1-214-108-00	RES, METAL 100 1% 1/4W
R84	1-214-154-00	RES, METAL 8.2K 1% 1/4W
R85	1-214-132-00	RES, METAL 1K 1% 1/4W
R86	1-214-148-00	RES, METAL 4.7K 1% 1/4W
R87	1-214-148-00	RES, METAL 4.7K 1% 1/4W
R88	1-214-179-00	RES, METAL 91K 1% 1/4W
R89	1-214-179-00	RES, METAL 91K 1% 1/4W
R90	1-214-172-00	RES, METAL 47K 1% 1/4W
R91	1-214-143-00	RES, METAL 3K 1% 1/4W
R92	1-214-143-00	RES, METAL 3K 1% 1/4W
R93	1-214-156-00	RES, METAL 10K 1% 1/4W
R94	1-214-156-00	RES, METAL 10K 1% 1/4W
R95	1-214-151-00	RES, METAL 6.2K 1% 1/4W
R96	1-224-938-00	RES, VAR, METAL 2K

Ref. No.	Part No.	Description
R97	1-214-155-00	RES, METAL 9.1K 1% 1/4W
R98	1-214-156-00	RES, METAL 10K 1% 1/4W
R99	1-214-156-00	RES, METAL 10K 1% 1/4W
R100	1-214-156-00	RES, METAL 10K 1% 1/4W
R101	1-214-151-00	RES, METAL 6.2K 1% 1/4W
R102	1-214-179-00	RES, METAL 91K 1% 1/4W
R103	1-214-172-00	RES, METAL 47K 1% 1/4W
R104	1-214-179-00	RES, METAL 91K 1% 1/4W
R105	1-214-180-00	RES, METAL 100K 1% 1/4W
R106	1-214-179-00	RES, METAL 91K 1% 1/4W
R107	1-214-172-00	RES, METAL 47K 1% 1/4W
R108	1-214-179-00	RES, METAL 91K 1% 1/4W
R109	1-214-160-00	RES, METAL 15K 1% 1/4W
R110	1-224-940-00	RES, VAR, METAL 10K
R111	1-224-940-00	RES, VAR, METAL 10K
R112	1-214-156-00	RES, METAL 10K 1% 1/4W
R113	1-214-180-00	RES, METAL 100K 1% 1/4W
R114	1-214-160-00	RES, METAL 15K 1% 1/4W
R115	1-214-160-00	RES, METAL 15K 1% 1/4W
R116	1-214-180-00	RES, METAL 100K 1% 1/4W
R117	1-214-156-00	RES, METAL 10K 1% 1/4W
R118	1-214-156-00	RES, METAL 10K 1% 1/4W
R119	1-214-156-00	RES, METAL 10K 1% 1/4W
R120	1-226-096-00	RES, VAR, METAL 500K
R121	1-214-124-00	RES, METAL 470 1% 1/4W
R122	1-214-180-00	RES, METAL 100K 1% 1/4W
R123	1-214-132-00	RES, METAL 1K 1% 1/4W
R124	1-214-132-00	RES, METAL 1K 1% 1/4W
R125	1-214-180-00	RES, METAL 100K 1% 1/4W
R126	1-214-143-00	RES, METAL 3K 1% 1/4W
R127	1-214-139-00	RES, METAL 2K 1% 1/4W
R128	1-214-151-00	RES, METAL 6.2K 1% 1/4W
R129	1-214-148-00	RES, METAL 4.7K 1% 1/4W
R130	1-214-156-00	RES, METAL 10K 1% 1/4W
R131	1-214-156-00	RES, METAL 10K 1% 1/4W
R132	1-214-160-00	RES, METAL 15K 1% 1/4W
R133	1-214-172-00	RES, METAL 47K 1% 1/4W
SW1	1-516-925-21	SWITCH, DIP, 8-CKT
SW2	1-516-925-21	SWITCH, DIP, 8-CKT
X1	1-527-227-00	CRYSTAL, 14.31818MHz

Ref. No.	Part No.	Description
FEH-1 BOARD		
	1-588-754-00	PC BOARD, FEH-1
H3	8-828-957-00	HEAD, FULL ERASE; EF18-51D

FRAMING-A BOARD

	A-6015-050-B	COMPLETE PCB, FRAMING-A (NTSC)
	A-6015-051-B	COMPLETE PCB, FRAMING-A (PM)
	A-6015-052-B	COMPLETE PCB, FRAMING-A (PS)
C3	1-161-036-00	CAP, CERAMIC 0.047 20% 25V
C5	1-107-085-00	CAP, MICA 100PF 5% 50V
C6	1-161-036-00	CAP, CERAMIC 0.047 20% 25V
C9	1-131-403-00	CAP, TANTALUM 0.15 10% 35V
C10	1-109-626-00	CAP, MICA 100PF 2% 500V
C13	1-161-034-00	CAP, CERAMIC 0.022 20% 25V
C15	1-109-624-00	CAP, MICA 47PF 2% 500V
C16	1-161-036-00	CAP, CERAMIC 0.047 20% 25V
C17	1-161-036-00	CAP, CERAMIC 0.047 20% 25V
C18	1-161-034-00	CAP, CERAMIC 0.022 20% 25V
C21	1-109-621-00	CAP, MICA 220PF 1% 500V
C23	1-107-096-00	CAP, MICA 300PF 5% 50V
C24	1-107-078-00	CAP, MICA 51PF 5% 50V
C25	1-107-078-00	CAP, MICA 51PF 5% 50V
C26	1-161-036-00	CAP, CERAMIC 0.047 20% 25V
C27	1-161-036-00	CAP, CERAMIC 0.047 20% 25V
C29	1-161-036-00	CAP, CERAMIC 0.047 20% 25V
C40	1-107-076-00	CAP, MICA 43PF 5% 50V
C45	1-107-089-00	CAP, MICA 150PF 5% 50V
C55	1-161-036-00	CAP, CERAMIC 0.047 20% 25V
C56	1-161-036-00	CAP, CERAMIC 0.047 20% 25V
C57	1-161-036-00	CAP, CERAMIC 0.047 20% 25V
C58	1-161-036-00	CAP, CERAMIC 0.047 20% 25V
C59	1-161-036-00	CAP, CERAMIC 0.047 20% 25V
C60	1-161-036-00	CAP, CERAMIC 0.047 20% 25V
C61	1-161-036-00	CAP, CERAMIC 0.047 20% 25V
C62	1-161-036-00	CAP, CERAMIC 0.047 20% 25V
C63	1-161-036-00	CAP, CERAMIC 0.047 20% 25V
C64	1-161-036-00	CAP, CERAMIC 0.047 20% 25V
C65	1-161-036-00	CAP, CERAMIC 0.047 20% 25V

Ref. No.	Part No.	Description
C66	1-161-036-00	CAP, CERAMIC 0.047 20% 25V
C67	1-161-036-00	CAP, CERAMIC 0.047 20% 25V
C72	1-107-202-00	CAP, MICA 10PF 5% 500V
C73	1-109-561-00	CAP, MICA 0.001 5% 100V
C74	1-107-210-00	CAP, MICA 22PF 5% 500V
C76	1-107-076-00	CAP, MICA 43PF 5% 50V
C77	1-102-107-00	CAP, CERAMIC 120PF 10% 50V
C79	1-131-407-00	CAP, TANTALUM 0.68 10% 35V
C80	1-131-408-00	CAP, TANTALUM 1 10% 35V
D1	8-719-156-25	DIODE RD5.6E-B2Z
D2	8-719-815-55	DIODE 1S1555
D3	8-719-801-08	DIODE TLG108
D4	8-719-713-92	DIODE 1S2139B
D5	8-719-815-55	DIODE 1S1555
D7	8-719-700-25	DIODE 1S1925PS (PS)
D8	8-719-700-25	DIODE 1S1925PS
D9	8-719-700-25	DIODE 1S1925PS
D10	8-719-700-25	DIODE 1S1925PS (NTSC; PM)
DL1	1-415-121-00	DELAY LINE, 100nS
IC1	8-759-952-07	IC SN75207N, TI
IC2	8-749-938-10	IC, BX-381; SONY
IC3	8-759-115-90	IC μPC159A (LM381H; NSC)
IC4	8-759-115-90	IC μPC159A (LM381H; NSC)
IC5	8-759-910-02	IC SN74S02N, TTL; TI
IC6	8-759-911-12	IC SN74S112N, TTL; TI
IC7	8-759-910-86	IC SN74S86N, TTL; TI
IC8	8-759-911-12	IC SN74S112N, TTL; TI
IC9	8-759-902-21	IC SN74LS221N, TTL; TI
IC10	8-759-902-21	IC SN74LS221N, TTL; TI
IC11	8-759-900-00	IC SN74LS00N, TTL; TI
IC12	8-759-902-21	IC SN74LS221N, TTL; TI
IC13	8-759-045-38	IC MC14538BCP, C-MOS; MOTOROLA
IC14	8-759-240-51	IC TC4051BP, C-MOS (CD4051BE; RCA)
IC15	8-759-900-04	IC SN74LS04N, TTL; TI
IC16	8-759-045-38	IC MC14538BCP, C-MOS; MOTOROLA
IC17	8-759-040-70	IC MC14070BCP, C-MOS; MOTOROLA
IC18	8-759-220-74	IC TC40H074P, C-MOS; TOSHIBA
IC19	8-759-220-74	IC TC40H074P, C-MOS; TOSHIBA
IC20	8-759-240-73	IC TC4073BP, C-MOS (CD4073BE; RCA)
IC21	8-759-245-20	IC TC4520BP, C-MOS (MC14520BCP; MOTOROLA)
IC22	8-759-240-11	IC TC4011BP, C-MOS (CD4011BE; RCA)
IC23	8-759-240-73	IC TC4073BP, C-MOS (CD4073BE; RCA)
IC24	8-759-240-11	IC TC4011BP, C-MOS (CD4011BE; RCA)
IC25	8-759-220-74	IC TC40H074P, C-MOS; TOSHIBA
IC26	8-759-240-81	IC TC4081BP, C-MOS (CD4081BE; RCA)
IC27	8-759-045-38	IC MC14538BCP, C-MOS; MOTOROLA
IC28	8-759-245-39	IC TC4539BP, C-MOS (MC14539BCP; MOTOROLA)
IC29	8-759-900-74	IC SN74LS74AN, TTL; TI
IC30	8-759-900-04	IC SN74LS04N, TTL; TI
IC31	8-759-240-50	IC TC4050BP, C-MOS (CD4050BE; RCA)
IC32	8-759-900-74	IC SN74LS74AN, TTL; TI
IC33	8-759-240-81	IC TC4081BP, C-MOS (CD4081BE; RCA)
IC34	8-759-045-38	IC MC14538BCP, C-MOS; MOTOROLA (PS ONLY)
IC35	8-759-045-38	IC MC14538BCP, C-MOS; MOTOROLA
IC36	8-759-910-32	IC SN74S32N, TTL; TI
IC37	8-759-900-00	IC SN74LS00N, TTL; TI
IC38	8-759-900-08	IC SN74LS08N, TTL; TI
IC39	8-759-900-10	IC SN74LS10N, TTL; TI
L1	1-407-570-00	COIL, VAR 15μH (NTSC, PM)
L1	1-407-569-00	COIL, VAR 10μH (PS)
L2	1-409-309-00	COIL, TOROIDAL
Q1	8-724-375-01	TRANSISTOR 2SC403C
Q2	8-729-384-48	TRANSISTOR 2SA844
Q3	8-724-375-01	TRANSISTOR 2SC403C
Q4	8-724-375-01	TRANSISTOR 2SC403C
Q5	8-729-023-69	TRANSISTOR 2N2369A
Q6	8-723-302-00	TRANSISTOR 2SK43-2
Q7	8-762-210-00	TRANSISTOR 2SA840
Q8	8-724-375-01	TRANSISTOR 2SC403C
Q9	8-724-375-01	TRANSISTOR 2SC403C
Q10	8-724-375-01	TRANSISTOR 2SC403C
Q11	8-724-375-01	TRANSISTOR 2SC403C
Q16	8-724-375-01	TRANSISTOR 2SC403C
Q17	8-724-375-01	TRANSISTOR 2SC403C
Q18	8-724-375-01	TRANSISTOR 2SC403C
Q19	8-729-663-47	TRANSISTOR 2SC1364 (PS ONLY)

Ref. No.	Part No.	Description
R26	1-214-139-00	RES, METAL 2K 1% 1/4W
R48	1-214-177-00	RES, METAL 75K 1% 1/4W (NTSC, PM)
R48	1-214-179-00	RES, METAL 91K 1% 1/4W (PS)
R49	1-214-162-00	RES, METAL 18K 1% 1/4W (NTSC, PM)
R49	1-214-164-00	RES, METAL 22K 1% 1/4W (PS)
R50	1-214-156-00	RES, METAL 10K 1% 1/4W
R51	1-214-171-00	RES, METAL 43K 1% 1/4W (NTSC, PM)
R51	1-214-173-00	RES, METAL 51K 1% 1/4W (PS)
R88	1-224-938-00	RES, VAR, METAL 2K
R89	1-224-949-00	RES, VAR, METAL 5K
R90	1-224-941-00	RES, VAR, METAL 20K
R94	1-224-941-00	RES, VAR, METAL 20K
R114	1-224-943-00	RES, VAR, METAL 100K
SW1	1-552-096-00	SWITCH, SLIDE
X1	1-527-521-00	CRYSTAL 17.734475MHz (PS)
X1	1-527-523-00	CRYSTAL, 14.302MHz (PM)
X1	1-527-227-00	CRYSTAL, 14.31818MHz (NTSC)

LAMP BOARD

	A-6025-069-A	COMPLETE PCB, LAMP
D1	8-719-904-61	DIODE LD461
D2	8-719-904-78	DIODE LD478
D3	8-719-904-78	DIODE LD478
D4	8-719-904-78	DIODE LD478
D5	8-719-904-78	DIODE LD478
PL1	1-518-145-XX	LAMP, PILOT, 5V/60mA

Ref. No.	Part No.	Description

LINE OUT BOARD (NTSC)

	A-6013-023-A	COMPLETE PCB, LINE OUT (U/C)
	A-6013-024-A	COMPLETE PCB, LINE OUT (J)
C2	1-131-349-00	CAP, TANTALUM 2.2 10% 35V
C4	1-107-085-00	CAP, MICA 100PF 5% 50V
C5	1-131-359-00	CAP, TANTALUM 10 10% 25V
C6	1-107-077-00	CAP, MICA 47PF 5% 50V
C7	1-131-406-00	CAP, TANTALUM 0.47 10% 35V
C24	1-131-349-00	CAP, TANTALUM 2.2 10% 35V
C26	1-107-085-00	CAP, MICA 100PF 5% 50V
C27	1-131-359-00	CAP, TANTALUM 10 10% 25V
C28	1-107-077-00	CAP, MICA 47PF 5% 50V
C29	1-131-406-00	CAP, TANTALUM 0.047 10% 35V
C43	1-131-349-00	CAP, TANTALUM 2.2 10% 35V
C45	1-107-085-00	CAP, MICA 100PF 5% 50V
C46	1-131-359-00	CAP, TANTALUM 10 10% 25V
C47	1-107-077-00	CAP, MICA 47PF 5% 50V
C48	1-131-406-00	CAP, TANTALUM 0.47 10% 35V
C62	1-131-408-00	CAP, TANTALUM 1 10% 35V
D1	8-719-815-55	DIODE 1S1555
D2	8-719-111-07	DIODE RD11E-B
D3	8-719-815-55	DIODE 1S1555
D4	8-719-815-55	DIODE 1S1555
D6	8-719-815-55	DIODE 1S1555
D7	8-719-815-55	DIODE 1S1555
D8	8-719-200-02	DIODE 10E-2
D9	8-719-815-55	DIODE 1S1555
D10	8-719-118-07	DIODE RD18E-B
D11	8-719-815-55	DIODE 1S1555
D12	8-719-111-07	DIODE RD11E-B
D13	8-719-815-55	DIODE 1S1555
D14	8-719-815-55	DIODE 1S1555
D15	8-719-815-55	DIODE 1S1555
D16	8-719-815-55	DIODE 1S1555
D17	8-719-200-02	DIODE 10E-2
D18	8-719-815-55	DIODE 1S1555
D19	8-719-111-07	DIODE RD11E-B
D20	8-719-815-55	DIODE 1S1555
D21	8-719-815-55	DIODE 1S1555
D23	8-719-815-55	DIODE 1S1555
D24	8-719-815-55	DIODE 1S1555

Ref. No.	Part No.	Description
IC3	8-759-145-57	IC μPC4557C; NEC
IC4	8-759-145-57	IC μPC4557C; NEC
IC5	8-759-145-57	IC μPC4557C; NEC
Q1	8-761-622-00	TRANSISTOR 2SC1636
Q2	8-765-020-00	TRANSISTOR 2SA884
Q3	8-765-020-00	TRANSISTOR 2SA884
Q4	8-765-222-20	TRANSISTOR 2SC1963
Q5	8-761-622-00	TRANSISTOR 2SC1636
Q6	8-761-622-00	TRANSISTOR 2SC1636
Q7	8-729-316-23	TRANSISTOR 2SC1162
Q8	8-729-371-53	TRANSISTOR 2SA715
Q9	8-729-663-47	TRANSISTOR 2SC1364
Q10	8-729-663-47	TRANSISTOR 2SC1364
Q11	8-761-622-00	TRANSISTOR 2SC1636
Q12	8-765-020-00	TRANSISTOR 2SA884
Q13	8-765-020-00	TRANSISTOR 2SA884
Q14	8-765-222-20	TRANSISTOR 2SC1963
Q15	8-761-622-00	TRANSISTOR 2SC1636
Q16	8-761-622-00	TRANSISTOR 2SC1636
Q17	8-729-316-23	TRANSISTOR 2SC1162
Q18	8-729-371-53	TRANSISTOR 2SA715
Q19	8-729-374-02	TRANSISTOR 2SB740
Q20	8-761-622-00	TRANSISTOR 2SC1636
Q21	8-765-020-00	TRANSISTOR 2SA884
Q22	8-765-020-00	TRANSISTOR 2SA884
Q23	8-765-222-20	TRANSISTOR 2SC1963
Q24	8-761-622-00	TRANSISTOR 2SC1636
Q25	8-761-622-00	TRANSISTOR 2SC1636
Q26	8-729-316-23	TRANSISTOR 2SC1162
Q27	8-729-371-53	TRANSISTOR 2SA715
R8	1-224-934-00	RES, VAR, METAL 100
R38	1-224-948-00	RES, VAR, METAL 2K
R64	1-224-934-00	RES, VAR, METAL 100
R92	1-224-948-00	RES, VAR, METAL 2K
R110	1-224-934-00	RES, VAR, METAL 100
R140	1-224-948-00	RES, VAR, METAL 2K

Ref. No.	Part No.	Description
LINE OUT BOARD (PS, PM)		
	A-6013-025-A	COMPLETE PCB, LINE OUT (PM, PS NO-A4)
	A-6013-030-A	COMPLETE PCB, LINE OUT (PS A4)
C2	1-131-349-00	CAP, TANTALUM 2.2 10% 35V
C4	1-107-085-00	CAP, MICA 100PF 5% 50V
C5	1-131-359-00	CAP, TANTALUM 10 10% 25V
C6	1-107-077-00	CAP, MICA 47PF 5% 50V
C7	1-131-406-00	CAP, TANTALUM 0.47 10% 35V
C13	1-131-349-00	CAP, TANTALUM 2.2 10% 35V
C14	1-131-352-00	CAP, TANTALUM 6.8 10% 35V
C18	1-107-093-00	CAP, MICA 220PF 5% 50V
C20	1-131-351-00	CAP, TANTALUM 4.7 10% 35V
C24	1-131-349-00	CAP, TANTALUM 2.2 10% 35V
C26	1-107-085-00	CAP, MICA 100PF 5% 50V
C27	1-131-349-00	CAP, TANTALUM 10 10% 25V
C28	1-107-077-00	CAP, MICA 47PF 5% 50V
C29	1-131-406-00	CAP, TANTALUM 0.47 10% 35V
C35	1-131-349-00	CAP, TANTALUM 2.2 10% 35V
C36	1-131-352-00	CAP, TANTALUM 6.8 10% 35V
C38	1-107-093-00	CAP, MICA 220PF 5% 50V
C40	1-131-351-00	CAP, TANTALUM 4.7 10% 35V
C43	1-131-349-00	CAP, TANTALUM 2.2 10% 35V
C45	1-107-085-00	CAP, MICA 100PF 5% 50V
C46	1-131-359-00	CAP, TANTALUM 10 10% 25V
C47	1-107-077-00	CAP, MICA 47PF 5% 50V
C48	1-131-406-00	CAP, TANTALUM 0.47 10% 35V
C55	1-131-349-00	CAP, TANTALUM 2.2 10% 35V
C56	1-131-352-00	CAP, TANTALUM 6.8 10% 35V
C59	1-107-093-00	CAP, MICA 220PF 5% 50V
C61	1-131-351-00	CAP, TANTALUM 4.7 10% 35V
C62	1-131-408-00	CAP, TANTALUM 1 10% 35V
D1	8-719-815-55	DIODE 1S1555
D2	8-719-111-07	DIODE RD11E-B
D3	8-719-815-55	DIODE 1S1555
D4	8-719-815-55	DIODE 1S1555
D5	8-719-139-07	DIODE RD3.9E-B
D6	8-719-815-55	DIODE 1S1555
D7	8-719-815-55	DIODE 1S1555
D8	8-719-200-02	DIODE 10E-2
D9	8-719-815-55	DIODE 1S1555
D10	8-719-118-07	DIODE RD18E-B
D11	8-719-815-55	DIODE 1S1555
D12	8-719-111-07	DIODE RD11E-B
D13	8-719-815-55	DIODE 1S1555
D14	8-719-815-55	DIODE 1S1555
D15	8-719-815-55	DIODE 1S1555

Ref. No.	Part No.	Description
D16	8-719-815-55	DIODE 1S1555
D17	8-719-200-02	DIODE 10E-2
D18	8-719-815-55	DIODE 1S1555
D19	8-719-111-07	DIODE RD11E-B
D20	8-719-815-55	DIODE 1S1555
D21	8-719-815-55	DIODE 1S1555
D22	8-719-139-07	DIODE RD3.9E-B
D23	8-719-815-55	DIODE 1S1555
D24	8-719-815-55	DIODE 1S1555
IC1	8-750-670-00	IC CX-067; SONY
IC2	8-750-670-00	IC CX-067; SONY
IC3	8-759-145-57	IC μPC4557C; NEC
IC4	8-759-145-57	IC μPC4557C; NEC
IC5	8-759-145-57	IC μPC4557C; NEC
Q1	8-761-622-00	TRANSISTOR 2SC1636
Q2	8-765-020-00	TRANSISTOR 2SA884
Q3	8-765-020-00	TRANSISTOR 2SA884
Q4	8-765-222-20	TRANSISTOR 2SC1963
Q5	8-761-622-00	TRANSISTOR 2SC1636
Q6	8-761-622-00	TRANSISTOR 2SC1636
Q7	8-729-316-23	TRANSISTOR 2SC1162
Q8	8-729-371-53	TRANSISTOR 2SA715
Q9	8-729-663-47	TRANSISTOR 2SC1364
Q10	8-729-663-47	TRANSISTOR 2SC1364
Q11	8-761-622-00	TRANSISTOR 2SC1636
Q12	8-765-020-00	TRANSISTOR 2SA884
Q13	8-765-020-00	TRANSISTOR 2SA884
Q14	8-765-222-20	TRANSISTOR 2SC1963
Q15	8-761-622-00	TRANSISTOR 2SC1636
Q16	8-761-622-00	TRANSISTOR 2SC1636
Q17	8-729-316-23	TRANSISTOR 2SC1162
Q18	8-729-371-53	TRANSISTOR 2SA715
Q19	8-729-374-02	TRANSISTOR 2SB740
Q20	8-761-622-00	TRANSISTOR 2SC1636
Q21	8-765-020-00	TRANSISTOR 2SA884
Q22	8-765-020-00	TRANSISTOR 2SA884
Q23	8-765-222-20	TRANSISTOR 2SC1963
Q24	8-761-622-00	TRANSISTOR 2SC1636
Q25	8-761-622-00	TRANSISTOR 2SC1636
Q26	8-729-316-23	TRANSISTOR 2SC1162
Q27	8-729-371-53	TRANSISTOR 2SA715
R8	1-224-934-00	RES, VAR, METAL 100
R33	1-224-946-00	RES, VAR, METAL 500
R37	1-244-861-00	RES, CARBON 330 5% 1/2W
R38	1-224-948-00	RES, VAR, METAL 2K
R64	1-224-934-00	RES, VAR, METAL 100
R89	1-224-946-00	RES, VAR, METAL 500
R92	1-224-948-00	RES, VAR, METAL 2K
R110	1-224-934-00	RES, VAR, METAL 100
R135	1-224-946-00	RES, VAR, METAL 500
R139	1-244-861-00	RES, CARBON 330 5% 1/2W
R140	1-224-948-00	RES, VAR, METAL 2K

MOD BOARD (NTSC, PM)

	A-6011-048-A	COMPLETE PCB, MOD (NTSC, PM)
C6	1-131-363-00	CAP, TANTALUM 4.7 10% 20V
C7	1-131-363-00	CAP, TANTALUM 4.7 10% 20V
C9	1-107-077-00	CAP, MICA 47PF 5% 50V
C9	1-107-081-00	CAP, MICA 68PF 5% 50V
C9	1-107-084-00	CAP, MICA 91PF 5% 50V
C11	1-107-067-00	CAP, MICA 18PF 5% 50V
C17	1-107-098-00	CAP, MICA 1PF 0.5PF 50V
C18	1-107-061-00	CAP, MICA 10PF 5% 50V
C19	1-141-130-00	CAP, TRIMMER
C21	1-107-082-00	CAP, MICA 75PF 5% 50V
C23	1-107-065-00	CAP, MICA 15PF 5% 50V
C27	1-101-005-00	CAP, CERAMIC 0.022 50V
C28	1-109-620-00	CAP, MICA 200PF 1% 500V
C29	1-109-624-00	CAP, MICA 47PF 2% 500V
C30	1-141-131-00	CAP, TRIMMER
C33	1-101-005-00	CAP, CERAMIC 0.022 50V
C35	1-101-005-00	CAP, CERAMIC 0.022 50V
C37	1-101-005-00	CAP, CERAMIC 0.022 50V
C38	1-101-005-00	CAP, CERAMIC 0.022 50V
C40	1-107-075-00	CAP, MICA 39PF 5% 50V
C41	1-107-075-00	CAP, MICA 39PF 5% 50V
C42	1-101-005-00	CAP, CERAMIC 0.022 50V
C43	1-101-005-00	CAP, CERAMIC 0.022 50V
C45	1-101-005-00	CAP, CERAMIC 0.022 50V
C47	1-107-085-00	CAP, MICA 100PF 5% 50V
C48	1-101-005-00	CAP, CERAMIC 0.022 50V
C49	1-107-079-00	CAP, MICA 56PF 5% 50V
C50	1-107-083-00	CAP, MICA 82PF 5% 50V
C51	1-107-079-00	CAP, MICA 56PF 5% 50V
C52	1-101-005-00	CAP, CERAMIC 0.022 50V

Ref. No.	Part No.	Description
C54	1-101-005-00	CAP, CERAMIC 0.022 50V
C58	1-101-005-00	CAP, CERAMIC 0.022 50V
C59	1-101-005-00	CAP, CERAMIC 0.022 50V
C60	1-101-005-00	CAP, CERAMIC 0.022 50V
C61	1-101-005-00	CAP, CERAMIC 0.022 50V
C62	1-101-001-00	CAP, CERAMIC 0.001 50V
C63	1-101-005-00	CAP, CERAMIC 0.022 50V
C64	1-101-005-00	CAP, CERAMIC 0.022 50V
C66	1-101-005-00	CAP, CERAMIC 0.022 50V
C72	1-101-005-00	CAP, CERAMIC 0.022 50V
C74	1-101-005-00	CAP, CERAMIC 0.022 50V
C77	1-101-005-00	CAP, CERAMIC 0.022 50V
C79	1-101-005-00	CAP, CERAMIC 0.022 50V
C84	1-107-089-00	CAP, MICA 150PF 5% 50V
C86	1-107-089-00	CAP, MICA 150PF 5% 50V
C87	1-107-075-00	CAP, MICA 39PF 5% 50V
C88	1-107-083-00	CAP, MICA 82PF 5% 50V
C89	1-107-061-00	CAP, MICA 10PF 5% 50V
C90	1-107-061-00	CAP, MICA 10PF 5% 50V
C94	1-101-005-00	CAP, CERAMIC 0.022 50V
C95	1-101-005-00	CAP, CERAMIC 0.022 50V
C97	1-101-005-00	CAP, CERAMIC 0.022 50V
C204	1-107-061-00	CAP, MICA 10PF 5% 50V
D1	8-719-116-07	DIODE RD16E-B
D2	8-719-700-25	DIODE 1S1925PS
D3	8-719-700-25	DIODE 1S1925PS
D4	8-719-700-25	DIODE 1S1925PS
D5	8-719-700-25	DIODE 1S1925PS
D6	8-719-815-55	DIODE 1S1555
D7	8-719-815-55	DIODE 1S1555
D8	8-719-162-07	DIODE RD6.2E-B
D9	8-719-700-25	DIODE 1S1925PS
D10	8-719-700-25	DIODE 1S1925PS
D11	8-719-815-55	DIODE 1S1555
D12	8-719-162-07	DIODE RD6.2E-B
D13	8-719-815-55	DIODE 1S1555
D14	8-719-815-59	DIODE 1S1555S
D15	8-719-815-59	DIODE 1S1555S
D16	8-719-815-55	DIODE 1S1555
D17	8-719-815-55	DIODE 1S1555
D18	8-719-815-55	DIODE 1S1555
D19	8-719-815-55	DIODE 1S1555
D20	8-719-815-55	DIODE 1S1555
D21	8-719-815-55	DIODE 1S1555
D22	8-719-815-55	DIODE 1S1555
D300	8-719-815-55	DIODE 1S1555
FL1	1-231-415-00	FILTER, LOWPASS 7MHz

Ref. No.	Part No.	Description
IC1	8-759-001-16	IC MC10116L; MOTOROLA
IC2	8-759-275-14	IC TA7504M-R (μA741HC; FSC)
IC3	8-759-275-14	IC TA7504M-R (μA741HC; FSC)
L3	1-407-571-00	COIL, VAR 22mH
L4	1-407-571-00	COIL, VAR 22mH
L5	1-407-161-XX	INDUCTOR MICRO 22
L6	1-407-161-XX	INDUCTOR MICRO 22
L7	1-407-161-XX	INDUCTOR MICRO 22
L8	1-407-569-00	COIL, VAR 10mH
L9	1-407-161-XX	INDUCTOR MICRO 22
L10	1-407-161-XX	INDUCTOR MICRO 22
L11	1-407-161-XX	INDUCTOR MICRO 22
L12	1-407-161-XX	INDUCTOR MICRO 22
L14	1-407-161-XX	INDUCTOR MICRO 22
L15	1-407-161-XX	INDUCTOR MICRO 22
L16	1-407-177-XX	INDUCTOR MICRO 470
L17	1-407-494-00	INDUCTOR MICRO 1.5mH
L18	1-407-571-00	COIL, VAR 22mH
L19	1-407-161-XX	INDUCTOR MICRO 22
L20	1-409-309-00	COIL, TOROIDAL
L21	1-409-309-00	COIL, TOROIDAL
Q1	8-724-375-01	TRANSISTOR 2SC403C
Q2	8-724-375-01	TRANSISTOR 2SC403C
Q3	8-720-002-96	TRANSISTOR TX-429D
Q4	8-724-375-01	TRANSISTOR 2SC403C
Q5	8-724-375-01	TRANSISTOR 2SC403C
Q6	8-725-800-00	TRANSISTOR 2SC1128
Q7	8-724-375-01	TRANSISTOR 2SC403C
Q8	8-725-412-00	TRANSISTOR 2SC1124
Q9	8-725-412-00	TRANSISTOR 2SC1124
Q10	8-724-375-01	TRANSISTOR 2SC403C
Q11	8-724-375-01	TRANSISTOR 2SC403C
Q12	8-769-200-30	TRANSISTOR 2SK107-3
Q13	8-769-200-30	TRANSISTOR 2SK107-3
Q14	8-724-375-01	TRANSISTOR 2SC403C
Q15	8-724-375-01	TRANSISTOR 2SC403C
Q16	8-724-375-01	TRANSISTOR 2SC403C
Q17	8-724-375-01	TRANSISTOR 2SC403C
Q18	8-769-200-30	TRANSISTOR 2SK107-3
Q19	8-724-375-01	TRANSISTOR 2SC403C
Q20	8-729-171-10	TRANSISTOR 2SA711
Q21	8-729-171-10	TRANSISTOR 2SA711
Q22	8-729-612-77	TRANSISTOR 2SA1027R
Q23	8-725-800-00	TRANSISTOR 2SC1128
Q24	8-725-800-00	TRANSISTOR 2SC1128
Q25	8-729-612-77	TRANSISTOR 2SA1027R

Ref. No.	Part No.	Description
Q26	8-729-612-77	TRANSISTOR 2SA1027R
Q27	8-727-632-00	TRANSISTOR 2SA706
Q28	8-725-800-00	TRANSISTOR 2SC1128
Q29	8-725-800-00	TRANSISTOR 2SC1128
Q30	8-729-663-47	TRANSISTOR 2SC1364
Q31	8-729-612-77	TRANSISTOR 2SA1027R
Q32	8-729-663-47	TRANSISTOR 2SC1364
Q33	8-724-375-01	TRANSISTOR 2SC403C
Q34	8-729-612-77	TRANSISTOR 2SA1027R
Q35	8-729-612-77	TRANSISTOR 2SA1027R
Q36	8-729-612-77	TRANSISTOR 2SA1027R
Q37	8-729-612-77	TRANSISTOR 2SA1027R
Q38	8-724-375-01	TRANSISTOR 2SC403C
Q39	8-724-375-01	TRANSISTOR 2SC403C
Q40	8-724-375-01	TRANSISTOR 2SC403C
Q41	8-724-375-01	TRANSISTOR 2SC403C
Q42	8-724-375-01	TRANSISTOR 2SC403C
Q43	8-724-375-01	TRANSISTOR 2SC403C
Q44	8-724-375-01	TRANSISTOR 2SC403C
Q45	8-729-663-47	TRANSISTOR 2SC1364
Q46	8-729-663-47	TRANSISTOR 2SC1364
Q300	8-724-375-01	TRANSISTOR 2SC403C
R1	1-214-101-00	RES, METAL 51 1% 1/4W
R6	1-214-132-00	RES, METAL 1K 1% 1/4W
R8	1-214-144-00	RES, METAL 3.3K 1% 1/4W
R10	1-224-942-00	RES, VAR, METAL 50K
R12	1-214-111-00	RES, METAL 130 1% 1/4W
R33	1-214-147-00	RES, METAL 4.3K 1% 1/4W
R36	1-214-119-00	RES, METAL 300 1% 1/4W
R37	1-214-120-00	RES, METAL 330 1% 1/4W
R40	1-214-134-00	RES, METAL 1.2K 1% 1/4W
R41	1-224-936-00	RES, VER, METAL 500
R43	1-214-131-00	RES, METAL 910 1% 1/4W
R44	1-214-145-00	RES, METAL 3.6K 1% 1/4W
R45	1-224-937-00	RES, VAR, METAL 1K
R50	1-224-938-00	RES, VAR, METAL 2K
R56	1-214-136-00	RES, METAL 1.5K 1% 1/4W
R57	1-214-106-00	RES, METAL 82 1% 1/4W
R58	1-214-139-00	RES, METAL 2K 1% 1/4W
R59	1-214-123-00	RES, METAL 430 1% 1/4W
R62	1-214-139-00	RES, METAL 2K 1% 1/4W
R63	1-224-938-00	RES, VAR, METAL 2K
R64	1-214-136-00	RES, METAL 1.5K 1% 1/4W
R65	1-214-136-00	RES, METAL 1.5K 1% 1/4W
R67	1-214-166-00	RES, METAL 27K 1% 1/4W
R68	1-224-942-00	RES, VAR, METAL 50K
R69	1-214-144-00	METAL 3.3K 1% 1/4W

Ref. No.	Part No.	Description
R72	1-224-936-00	RES, VAR, METAL 500
R73	1-214-145-00	RES, METAL 3.6K 1% 1/4W
R74	1-214-145-00	RES, METAL 3.6K 1% 1/4W
R78	1-214-125-00	RES, METAL 510 1% 1/4W
R79	1-214-125-00	RES, METAL 510 1% 1/4W
R80	1-214-101-00	RES, METAL 51 1% 1/4W
R81	1-214-101-00	RES, METAL 51 1% 1/4W
R84	1-214-108-00	RES, METAL 100 1% 1/4W
R85	1-214-108-00	RES, METAL 100 1% 1/4W
R88	1-224-938-00	RES, VER, METAL 2K
R96	1-214-132-00	RES, METAL 1K 1% 1/4W
R97	1-214-132-00	RES, METAL 1K 1% 1/4W
R100	1-224-938-00	RES, VAR, METAL 2K
R106	1-214-119-00	RES, METAL 300 1% 1/4W
R107	1-214-119-00	RES, METAL 300 1% 1/4W
R147	1-214-116-00	RES, METAL 220 1% 1/4W
R148	1-214-131-00	RES, METAL 910 1% 1/4W
R149	1-214-145-00	RES, METAL 3.6K 1% 1/4W
R150	1-214-143-00	RES, METAL 3K 1% 1/4W
R151	1-214-178-00	RES, METAL 82K 1% 1/4W
R152	1-214-084-00	RES, METAL 10 1% 1/4W
R154	1-214-120-00	RES, METAL 330 1% 1/4W
R155	1-224-935-00	RES, VAR, METAL 200
R156	1-224-935-00	RES, VAR, METAL 200
R182	1-224-937-00	RES, VAR, METAL 1K
R188	1-214-172-00	RES, METAL 47K 1% 1/4W
R189	1-214-125-00	RES, METAL 510 1% 1/4W
R190	1-214-180-00	RES, METAL 100K 1% 1/4W
RY300	1-515-309-00	RELAY, 5V/200Ω
TH1	1-800-197-00	THERMISTOR, S-4K

MOD BOARD (PS)

Ref. No.	Part No.	Description
	A-6011-049-A	COMPLETE PCB, MOD (PS)
C6	1-131-363-00	CAP, TANTALUM 4.7 10% 20V
C7	1-131-363-00	CAP, TANTALUM 4.7 10% 20V
C9	1-107-076-00	CAP, MICA 43PF 5% 50V
CHOICE	1-107-078-00	CAP, MICA 51PF 5% 50V
	1-107-081-00	CAP, MICA 68PF 5% 50V
C11	1-107-067-00	CAP, MICA 18PF 5% 50V
C17	1-107-098-00	CAP, MICA 1PF 0.5PF 50V
C18	1-107-102-00	CAP, MICA 5PF 0.5PF 50V
C21	1-107-079-00	CAP, MICA 56PF 5% 50V
C23	1-107-065-00	CAP, MICA 15PF 5% 50V
C27	1-101-005-00	CAP, CERAMIC 0.022 50V
C33	1-101-005-00	CAP, CERAMIC 0.022 50V
C35	1-101-005-00	CAP, CERAMIC 0.022 50V
C37	1-101-005-00	CAP, CERAMIC 0.022 50V
C38	1-101-005-00	CAP, CERAMIC 0.022 50V
C40	1-107-075-00	CAP, MICA 39PF 5% 50V
C41	1-107-075-00	CAP, MICA 39PF 5% 50V
C42	1-101-005-00	CAP, CERAMIC 0.022 50V
C43	1-101-005-00	CAP, CERAMIC 0.022 50V
C45	1-101-005-00	CAP, CERAMIC 0.022 50V
C47	1-107-085-00	CAP, MICA 100PF 5% 50V
C48	1-101-005-00	CAP, CERAMIC 0.022 50V
C49	1-107-079-00	CAP, MICA 56PF 5% 50V
C50	1-107-083-00	CAP, MICA 82PF 5% 50V
C51	1-107-079-00	CAP, MICA 56PF 5% 50V
C52	1-101-005-00	CAP, CERAMIC 0.022 50V
C54	1-101-005-00	CAP, CERAMIC 0.022 50V
C58	1-101-005-00	CAP, CERAMIC 0.022 50V
C59	1-101-005-00	CAP, CERAMIC 0.022 50V
C60	1-101-005-00	CAP, CERAMIC 0.022 50V
C61	1-101-005-00	CAP, CERAMIC 0.022 50V
C62	1-101-001-00	CAP, CERAMIC 0.001 50V
C63	1-101-005-00	CAP, CERAMIC 0.022 50V
C64	1-101-005-00	CAP, CERAMIC 0.022 50V
C66	1-101-005-00	CAP, CERAMIC 0.022 50V
C72	1-101-005-00	CAP, CERAMIC 0.022 50V
C74	1-101-005-00	CAP, CERAMIC 0.022 50V
C77	1-101-005-00	CAP, CERAMIC 0.022 50V
C79	1-101-005-00	CAP, CERAMIC 0.022 50V
C84	1-107-089-00	CAP, MICA 150PF 5% 50V
C86	1-107-089-00	CAP, MICA 150PF 5% 50V
C87	1-107-075-00	CAP, MICA 39PF 5% 50V
C88	1-107-083-00	CAP, MICA 82PF 5% 50V
C89	1-107-061-00	CAP, MICA 10PF 5% 50V
C90	1-107-061-00	CAP, MICA 10PF 5% 50V
C94	1-101-005-00	CAP, CERAMIC 0.022 50V
C95	1-101-005-00	CAP, CERAMIC 0.022 50V
C97	1-101-005-00	CAP, CERAMIC 0.022 50V
C201	1-107-099-00	CAP, MICA 2PF 0.5PF 50V
C202	1-109-626-00	CAP, MICA 100PF 2% 500V
C203	1-107-074-00	CAP, MICA 5% 50V
C204	1-107-063-00	CAP, MICA 12PF 5% 50V
C205	1-107-104-00	CAP, MICA 7PF 0.5PF 50V
D1	8-719-116-07	DIODE RD16E-B
D2	8-719-700-25	DIODE 1S1925PS
D3	8-719-700-25	DIODE 1S1925PS
D4	8-719-700-25	DIODE 1S1925PS
D5	8-719-700-25	DIODE 1S1925PS
D6	8-719-815-55	DIODE 1S1555
D7	8-719-815-55	DIODE 1S1555
D8	8-719-162-07	DIODE RD6.2E-B
D9	8-719-700-25	DIODE 1S1925PS
D10	8-719-700-25	DIODE 1S1925PS
D11	8-719-815-55	DIODE 1S1555
D12	8-719-162-07	DIODE RD6.2E-B
D13	8-719-815-55	DIODE 1S1555
D14	8-719-815-59	DIODE 1S1555S
D15	8-719-815-59	DIODE 1S1555S
D16	8-719-815-55	DIODE 1S1555
D17	8-719-815-55	DIODE 1S1555
D18	8-719-815-55	DIODE 1S1555
D19	8-719-815-55	DIODE 1S1555
D20	8-719-815-55	DIODE 1S1555
D21	8-719-815-55	DIODE 1S1555
D22	8-719-815-55	DIODE 1S1555
D200	8-719-162-07	DIODE RD6.2E-B
D300	8-719-815-55	DIODE 1S1555
FL1	1-231-415-00	FILTER, LOWPASS 7MHz
IC1	8-759-001-16	IC MC10116L; MOTOROLA
IC2	8-759-275-14	IC TA7504M-R (μA741HC; FSC)
IC3	8-759-275-14	IC TA7504M-R (μA741HC; FSC)
L3	1-407-571-00	COIL, VAR 20mH
L4	1-407-571-00	COIL, VAR 20mH
L5	1-407-161-XX	INDUCTOR MICRO 22
L6	1-407-161-XX	INDUCTOR MICRO 22
L7	1-407-161-XX	INDUCTOR MICRO 22

Ref. No.	Part No.	Description
L8	1-407-569-00	COIL, VAR 10mH
L9	1-407-161-XX	INDUCTOR MICRO 22
L10	1-407-161-XX	INDUCTOR MICRO 22
L11	1-407-161-XX	INDUCTOR MICRO 22
L12	1-407-161-XX	INDUCTOR MICRO 22
L14	1-407-161-XX	INDUCTOR MICRO 22
L15	1-407-161-XX	INDUCTOR MICRO 22
L16	1-407-177-XX	INDUCTOR MICRO 470
L17	1-407-494-00	INDUCTOR MICRO 1.5mH
L18	1-407-571-00	COIL, VAR 22mH
L19	1-407-161-XX	INDUCTOR MICRO 22
L20	1-409-309-00	COIL, TOROIDAL
L21	1-409-309-00	COIL, TOROIDAL
Q1	8-724-375-01	TRANSISTOR 2SC403C
Q2	8-724-375-01	TRANSISTOR 2SC403C
Q3	8-720-002-96	TRANSISTOR TX-429D
Q4	8-724-375-01	TRANSISTOR 2SC403C
Q5	8-724-375-01	TRANSISTOR 2SC403C
Q6	8-725-800-00	TRANSISTOR 2SC1128
Q7	8-724-375-01	TRANSISTOR 2SC403C
Q8	8-725-412-00	TRANSISTOR 2SC1124
Q9	8-725-412-00	TRANSISTOR 2SC1124
Q10	8-724-375-01	TRANSISTOR 2SC403C
Q11	8-724-375-01	TRANSISTOR 2SC403C
Q12	8-769-200-30	TRANSISTOR 2SK107-3
Q13	8-769-200-30	TRANSISTOR 2SK107-3
Q14	8-724-375-01	TRANSISTOR 2SC403C
Q15	8-724-375-01	TRANSISTOR 2SC403C
Q16	8-724-375-01	TRANSISTOR 2SC403C
Q17	8-724-375-01	TRANSISTOR 2SC403C
Q18	8-769-200-30	TRANSISTOR 2SK107-3
Q19	8-724-375-01	TRANSISTOR 2SC403C
Q20	8-729-171-10	TRANSISTOR 2SA711
Q21	8-729-171-10	TRANSISTOR 2SA711
Q22	8-729-612-77	TRANSISTOR 2SA1027R
Q23	8-725-800-00	TRANSISTOR 2SC1128
Q24	8-725-800-00	TRANSISTOR 2SC1128
Q25	8-729-612-77	TRANSISTOR 2SA1027R
Q26	8-729-612-77	TRANSISTOR 2SA1027R
Q27	8-727-632-00	TRANSISTOR 2SA706
Q28	8-725-800-00	TRANSISTOR 2SC1128
Q29	8-725-800-00	TRANSISTOR 2SC1128
Q30	8-729-663-47	TRANSISTOR 2SC1364
Q31	8-729-612-77	TRANSISTOR 2SA1027R
Q32	8-729-663-47	TRANSISTOR 2SC1364
Q33	8-724-375-01	TRANSISTOR 2SC403C
Q34	8-729-612-77	TRANSISTOR 2SA1027R
Q35	8-729-612-77	TRANSISTOR 2SA1027R
Q36	8-729-612-77	TRANSISTOR 2SA1027R
Q37	8-729-612-77	TRANSISTOR 2SA1027R
Q38	8-724-375-01	TRANSISTOR 2SC403C
Q39	8-724-375-01	TRANSISTOR 2SC403C
Q40	8-724-375-01	TRANSISTOR 2SC403C
Q41	8-724-375-01	TRANSISTOR 2SC403C
Q42	8-724-375-01	TRANSISTOR 2SC403C
Q43	8-724-375-01	TRANSISTOR 2SC403C
Q44	8-724-375-01	TRANSISTOR 2SC403C
Q45	8-729-663-47	TRANSISTOR 2SC1364
Q46	8-729-663-47	TRANSISTOR 2SC1364
Q200	8-724-375-01	TRANSISTOR 2SC403C
Q300	8-724-375-01	TRANSISTOR 2SC403C
R1	1-214-101-00	RES, METAL 51 1% 1/4W
R6	1-214-132-00	RES, METAL 1K 1% 1/4W
R8	1-214-144-00	RES, METAL 3.3K 1% 1/4W
R10	1-224-942-00	RES, VAR, METAL 50K
R12	1-214-111-00	RES, METAL 130 1% 1/4W
R33	1-214-147-00	RES, METAL 4.3K 1% 1/4W
R36	1-214-119-00	RES, METAL 300 1% 1/4W
R37	1-214-120-00	RES, METAL 330 1% 1/4W
R40	1-214-134-00	RES, METAL 1.2K 1% 1/4W
R41	1-224-936-00	RES, VAR, METAL 500
R43	1-214-131-00	RES, METAL 910 1% 1/4W
R44	1-214-145-00	RES, METAL 3.6K 1% 1/4W
R45	1-224-937-00	RES, VAR, METAL 1K
R50	1-224-938-00	RES, VAR, METAL 2K
R58	1-214-138-00	RES, METAL 1.8K 1% 1/4W
R62	1-214-139-00	RES, METAL 2K 1% 1/4W
R63	1-224-938-00	RES, VAR, METAL 2K
R64	1-214-136-00	RES, METAL 1.5K 1% 1/4W
R65	1-214-136-00	RES, METAL 1.5K 1% 1/4W
R67	1-214-166-00	RES, METAL 27K 1% 1/4W
R68	1-224-942-00	RES, VAR, METAL 50K
R69	1-214-144-00	RES, METAL 3.3K 1% 1/4W
R72	1-224-936-00	RES, VAR, METAL 500
R73	1-214-145-00	RES, METAL 3.6K 1% 1/4W
R74	1-214-145-00	RES, METAL 3.6K 1% 1/4W
R78	1-214-125-00	RES, METAL 510 1% 1/4W
R79	1-214-125-00	RES, METAL 510 1% 1/4W
R80	1-214-101-00	RES, METAL 51 1% 1/4W
R81	1-214-101-00	RES, METAL 51 1% 1/4W
R84	1-214-108-00	RES, METAL 100 1% 1/4W
R85	1-214-108-00	RES, METAL 100 1% 1/4W
R88	1-224-938-00	RES, VAR, METAL 2K
R96	1-214-132-00	RES, METAL 1K 1% 1/4W
R97	1-214-132-00	RES, METAL 1K 1% 1/4W
R100	1-224-938-00	RES, VAR, METAL 2K

Ref. No.	Part No.	Description
R106	**1-214-119-00**	**RES, METAL 300 1% 1/4W**
R107	**1-214-119-00**	**RES, METAL 300 1% 1/4W**
R147	**1-214-116-00**	**RES, METAL 220 1% 1/4W**
R148	**1-214-131-00**	**RES, METAL 910 1% 1/4W**
R149	**1-214-145-00**	**RES, METAL 3.6K 1% 1/4W**
R150	**1-214-143-00**	**RES, METAL 3K 1% 1/4W**
R151	**1-214-178-00**	**RES, METAL 82K 1% 1/4W**
R152	**1-214-084-00**	**RES, METAL 10 1% 1/4W**
R154	**1-214-120-00**	**RES, METAL 330 1% 1/4W**
R155	**1-224-935-00**	**RES, VAR, METAL 200**
R156	**1-224-935-00**	**RES, VAR, METAL 200**
R174	**1-224-942-00**	**RES, VAR, METAL 50K**
R182	**1-224-937-00**	**RES, VAR, METAL 1K**
R188	**1-214-172-00**	**RES, METAL 47K 1% 1/4W**
R189	**1-214-125-00**	**RES, METAL 510 1% 1/4W**
R190	**1-214-180-00**	**RES, METAL 100K 1% 1/4W**
R200	**1-214-124-00**	**RES, METAL 470 1% 1/4W**
R202	**1-214-147-00**	**RES, METAL 4.3K 1% 1/4W**
R203	**1-214-151-00**	**RES, METAL 6.2K 1% 1/4W**
RY300	**1-515-309-00**	**RELAY, 5V/200Ω**
TH1	**1-800-197-00**	**THERMISTOR, S-4K**

Ref. No.	Part No.	Description
CN36	1-508-904-00	TOP TYPE RECEPTACLE, 6P, MALE
CN37	1-508-906-00	TOP TYPE RECEPTACLE, 10P, MALE
CN38	1-508-905-00	TOP TYPE RECEPTACLE, 8P, MALE
CN39	1-508-949-00	TOP TYPE RECEPTACLE, 12P, MALE
CN40	1-508-949-00	TOP TYPE RECEPTACLE, 12P, MALE
CN41	1-508-949-00	TOP TYPE RECEPTACLE, 12P, MALE
CN42	1-508-904-00	TOP TYPE RECEPTACLE, 6P, MALE
CN43	1-508-949-00	TOP TYPE RECEPTACLE, 12P, MALE
CN44	1-508-949-00	TOP TYPE RECEPTACLE, 12P, MALE
CN45	1-508-906-00	TOP TYPE RECEPTACLE, 10P, MALE
CN46	1-508-906-00	TOP TYPE RECEPTACLE, 10P, MALE
CN47	1-508-901-00	TOP TYPE RECEPTACLE, 3P, MALE
CN48	1-508-903-00	TOP TYPE RECEPTACLE, 5P, MALE
CN49	1-508-905-00	TOP TYPE RECEPTACLE, 8P, MALE
CN121	1-508-877-00	PWB RECEPTACLE, 60P, FEMALE
CN122	1-508-877-00	PWB RECEPTACLE, 60P, FEMALE
CN123	1-508-877-00	PWB RECEPTACLE, 60P, FEMALE
CN124	1-508-877-00	PWB RECEPTACLE, 60P, FEMALE
CN125	1-508-877-00	PWB RECEPTACLE, 60P, FEMALE
CN126	1-508-877-00	PWB RECEPTACLE, 60P, FEMALE
CN127	1-508-877-00	PWB RECEPTACLE, 60P, FEMALE
CN128	1-508-877-00	PWB RECEPTACLE, 60P, FEMALE
CN129	1-508-877-00	PWB RECEPTACLE, 60P, FEMALE
CN130	1-508-877-00	PWB RECEPTACLE, 60P, FEMALE
CN131	1-508-877-00	PWB RECEPTACLE, 60P, FEMALE
CN132	1-508-877-00	PWB RECEPTACLE, 60P, FEMALE
CN133	1-508-877-00	PWB RECEPTACLE, 60P, FEMALE
CN134	1-508-877-00	PWB RECEPTACLE, 60P, FEMALE
CN135	1-508-877-00	PWB RECEPTACLE, 60P, FEMALE

MOTHER-1A BOARD

	A-6025-071-A	COMPLETE PCB, MOTHER-1A
CN21	1-508-904-00	TOP TYPE RECEPTACLE, 6P, MALE
CN22	1-508-903-00	TOP TYPE RECEPTACLE, 5P, MALE
CN23	1-508-905-00	TOP TYPE RECEPTACLE, 8P, MALE
CN24	1-508-904-00	TOP TYPE RECEPTACLE, 6P, MALE
CN25	1-508-901-00	TOP TYPE RECEPTACLE, 3P, MALE
CN26	1-508-904-00	TOP TYPE RECEPTACLE, 6P, MALE
CN27	1-508-901-00	TOP TYPE RECEPTACLE, 3P, MALE
CN28	1-508-903-00	TOP TYPE RECEPTACLE, 5P, MALE
CN29	1-508-901-00	TOP TYPE RECEPTACLE, 3P, MALE
CN30	1-508-903-00	TOP TYPE RECEPTACLE, 5P, MALE
CN31	1-508-906-00	TOP TYPE RECEPTACLE, 10P, MALE
CN32	1-508-906-00	TOP TYPE RECEPTACLE, 10P, MALE
CN33	1-508-901-00	TOP TYPE RECEPTACLE, 3P, MALE
CN34	1-508-904-00	TOP TYPE RECEPTACLE, 6P, MALE
CN35	1-508-903-00	TOP TYPE RECEPTACLE, 5P, MALE

MOTHER-2 BOARD

	A-6025-066-A	COMPLETE PCB, MOTHER-2
CN51	1-508-949-00	TOP TYPE RECEPTACLE, 12P, MALE
CN52	1-508-903-00	TOP TYPE RECEPTACLE, 5P, MALE
CN53	1-508-949-00	TOP TYPE RECEPTACLE, 12P, MALE
CN54	1-508-903-00	TOP TYPE RECEPTACLE, 5P, MALE
CN55	1-508-906-00	TOP TYPE RECEPTACLE, 10P, MALE
CN56	1-508-901-00	TOP TYPE RECEPTACLE, 3P, MALE
CN57	1-508-901-00	TOP TYPE RECEPTACLE, 3P, MALE
CN58	1-508-901-00	TOP TYPE RECEPTACLE, 3P, MALE
CN59	1-508-903-00	TOP TYPE RECEPTACLE, 5P, MALE
CN60	1-508-903-00	TOP TYPE RECEPTACLE, 5P, MALE

Ref. No.	Part No.	Description
CN61	1-508-901-00	TOP TYPE RECEPTACLE, 3P, MALE
CN62	1-508-901-00	TOP TYPE RECEPTACLE, 3P, MALE
CN63	1-508-901-00	TOP TYPE RECEPTACLE, 3P, MALE
CN64	1-508-906-00	TOP TYPE RECEPTACLE, 10P, MALE
CN65	1-508-949-00	TOP TYPE RECEPTACLE, 12P, MALE
CN66	1-508-904-00	TOP TYPE RECEPTACLE, 6P, MALE
CN67	1-508-904-00	TOP TYPE RECEPTACLE, 6P, MALE
CN68	1-508-903-00	TOP TYPE RECEPTACLE, 5P, MALE
CN69	1-508-904-00	TOP TYPE RECEPTACLE, 6P, MALE
CN70	1-508-901-00	TOP TYPE RECEPTACLE, 3P, MALE
CN71	1-508-901-00	TOP TYPE RECEPTACLE, 3P, MALE
CN72	1-508-904-00	TOP TYPE RECEPTACLE, 6P, MALE
CN73	1-508-904-00	TOP TYPE RECEPTACLE, 6P, MALE
CN74	1-508-903-00	TOP TYPE RECEPTACLE, 5P, MALE
CN75	1-508-901-00	TOP TYPE RECEPTACLE, 3P, MALE
CN76	1-508-905-00	TOP TYPE RECEPTACLE, 8P, MALE
CN77	1-508-901-00	TOP TYPE RECEPTACLE, 3P, MALE
CN78	1-508-904-00	TOP TYPE RECEPTACLE, 6P, MALE
CN79	1-508-906-00	TOP TYPE RECEPTACLE, 10P, MALE
CN80	1-508-903-00	TOP TYPE RECEPTACLE, 5P, MALE
CN81	1-508-901-00	TOP TYPE RECEPTACLE, 3P, MALE
CN82	1-508-901-00	TOP TYPE RECEPTACLE, 3P, MALE
CN83	1-508-905-00	TOP TYPE RECEPTACLE, 8P, MALE
CN84	1-508-903-00	TOP TYPE RECEPTACLE, 5P, MALE
CN85	1-508-901-00	TOP TYPE RECEPTACLE, 3P, MALE
CN86	1-508-949-00	TOP TYPE RECEPTACLE, 12P, MALE
CN87	1-508-906-00	TOP TYPE RECEPTACLE, 10P, MALE
CN88	1-508-905-00	TOP TYPE RECEPTACLE, 8P, MALE
CN89	1-508-904-00	TOP TYPE RECEPTACLE, 6P, MALE
CN90	1-508-949-00	TOP TYPE RECEPTACLE, 12P, MALE
CN91	1-508-906-00	TOP TYPE RECEPTACLE, 10P, MALE
CN92	1-508-904-00	TOP TYPE RECEPTACLE, 6P, MALE
CN93	1-561-365-00	COAXIAL CONNECTOR, MALE
CN94	1-561-365-00	COAXIAL CONNECTOR, MALE
CN141	1-508-877-00	PWB RECEPTACLE, 60P, FEMALE
CN142	1-508-877-00	PWB RECEPTACLE, 60P, FEMALE
CN143	1-508-877-00	PWB RECEPTACLE, 60P, FEMALE
CN144	1-508-877-00	PWB RECEPTACLE, 60P, FEMALE
CN145	1-508-877-00	PWB RECEPTACLE, 60P, FEMALE
CN146	1-508-877-00	PWB RECEPTACLE, 60P, FEMALE
CN147	1-508-877-00	PWB RECEPTACLE, 60P, FEMALE
CN148	1-508-877-00	PWB RECEPTACLE, 60P, FEMALE
CN149	1-508-877-00	PWB RECEPTACLE, 60P, FEMALE
CN150	1-508-877-00	PWB RECEPTACLE, 60P, FEMALE
CN151	1-508-877-00	PWB RECEPTACLE, 60P, FEMALE
CN152	1-508-877-00	PWB RECEPTACLE, 60P, FEMALE
CN153	1-508-877-00	PWB RECEPTACLE, 60P, FEMALE
CN154	1-508-877-00	PWB RECEPTACLE, 60P, FEMALE

MPA-A BOARD

Ref. No.	Part No.	Description
	A-6015-046-A	COMPLETE PCB, MPA-A
C4	**1-123-387-00**	**CAP, ELECT 47 20% 100V**
C8	**1-123-387-00**	**CAP, ELECT 47 20% 100V**
C10	**1-108-377-00**	**CAP, MYLAR 0.01 10% 100V**
C11	**1-108-377-00**	**CAP, MYLAR 0.01 10% 100V**
C13	**1-108-377-00**	**CAP, MYLAR 0.01 10% 100V**
C14	**1-108-377-00**	**CAP, MYLAR 0.01 10% 100V**
C16	**1-108-377-00**	**CAP, MYLAR 0.01 10% 100V**
C17	**1-108-377-00**	**CAP, MYLAR 0.01 10% 100V**
C18	**1-123-384-00**	**CAP, ELECT 10 20% 100V**
CN361	1-508-709-00	TOP TYPE RECEPTACLE, 5P, MALE
CN362	1-508-744-00	TOP TYPE RECEPTACLE, 10P, MALE
CN363	1-508-845-00	TOP TYPE RECEPTACLE, 6P, MALE
CN364	1-508-845-00	TOP TYPE RECEPTACLE, 6P, MALE
CN365	1-508-742-00	TOP TYPE RECEPTACLE, 3P, MALE
CN366	1-508-707-11	TOP TYPE RECEPTACLE, 3P, MALE
CN367	1-508-707-11	TOP TYPE RECEPTACLE, 3P, MALE
CN368	1-508-707-11	TOP TYPE RECEPTACLE, 3P, MALE
CN369	1-508-845-00	TOP TYPE RECEPTACLE, 6P, MALE
CN370	1-508-742-00	TOP TYPE RECEPTACLE, 3P, MALE
CN371	1-508-742-00	TOP TYPE RECEPTACLE, 3P, MALE
D1	**8-719-200-02**	**DIODE 10E-2**
D2	**8-719-200-02**	**DIODE 10E-2**
D3	**8-719-200-02**	**DIODE 10E-2**
D4	**8-719-200-02**	**DIODE 10E-2**
D5	**8-719-200-02**	**DIODE 10E-2**
D6	**8-719-200-02**	**DIODE 10E-2**
D7	**8-719-200-02**	**DIODE 10E-2**
D8	**8-719-200-02**	**DIODE 10E-2**
D9	**8-719-200-02**	**DIODE 10E-2**
D10	**8-719-200-02**	**DIODE 10E-2**
D11	**8-719-200-02**	**DIODE 10E-2**
D12	**8-719-200-02**	**DIODE 10E-2**
D13	**8-719-815-55**	**DIODE 1S1555**
D14	**8-719-709-25**	**DIODE 1S1925P**
D15	**8-719-200-02**	**DIODE 10E-2**
D16	**8-719-200-02**	**DIODE 10E-2**
D17	**8-719-815-55**	**DIODE 1S1555**
D18	**8-719-709-25**	**DIODE 1S1925P**
D19	**8-719-200-02**	**DIODE 10E-2**
D20	**8-719-200-02**	**DIODE 10E-2**

Ref. No.	Part No.	Description
D21	8-719-815-55	DIODE 1S1555
D22	8-719-709-25	DIODE 1S1925P
D23	8-719-200-02	DIODE 10E-2
D24	8-719-200-02	DIODE 10E-2
D25	8-719-815-55	DIODE 1S1555
D26	8-719-815-55	DIODE 1S1555
D27	8-719-815-55	DIODE 1S1555
D28	8-719-700-25	DIODE 1S1925PS
D29	8-719-700-25	DIODE 1S1925PS
D30	8-719-700-25	DIODE 1S1925PS
D31	8-719-700-25	DIODE 1S1925PS
D32	8-719-700-25	DIODE 1S1925PS
D33	8-719-700-25	DIODE 1S1925PS
D34	8-719-911-55	DIODE U05G
D35	8-719-911-55	DIODE U05G

Ref. No.	Part No.	Description
Q1	8-725-412-00	TRANSISTOR 2SC1124
Q2	8-762-110-00	TRANSISTOR 2SC1670
Q3	8-762-210-00	TRANSISTOR 2SA840
Q4	8-729-952-71	TRANSISTOR 2SC2527
Q5	8-729-907-71	TRANSISTOR 2SA1077
Q6	8-752-412-00	TRANSISTOR 2SC1124
Q7	8-762-110-00	TRANSISTOR 2SC1670
Q8	8-762-210-00	TRANSISTOR 2SA840
Q9	8-729-952-71	TRANSISTOR 2SC2527
Q10	8-729-907-71	TRANSISTOR 2SA1077
Q11	8-752-412-00	TRANSISTOR 2SC1124
Q12	8-762-110-00	TRANSISTOR 2SC1670
Q13	8-762-210-00	TRANSISTOR 2SA840
Q14	8-729-952-71	TRANSISTOR 2SC2527
Q15	8-729-907-71	TRANSISTOR 2SA1077
Q16	8-725-412-00	TRANSISTOR 2SC1124
Q17	8-762-110-00	TRANSISTOR 2SC1670
Q18	8-762-210-00	TRANSISTOR 2SA840
Q19	8-729-952-71	TRANSISTOR 2SC2527
Q20	8-729-907-71	TRANSISTOR 2SA1077
Q21	8-725-412-00	TRANSISTOR 2SC1124
Q22	8-762-110-00	TRANSISTOR 2SC1670
Q23	8-762-210-00	TRANSISTOR 2SA840
Q24	8-729-952-71	TRANSISTOR 2SC2527
Q25	8-729-907-71	TRANSISTOR 2SA1077
Q26	8-725-412-00	TRANSISTOR 2SC1124
Q27	8-762-110-00	TRANSISTOR 2SC1670
Q28	8-762-210-00	TRANSISTOR 2SA840
Q29	8-729-952-71	TRANSISTOR 2SC2527
Q30	8-729-907-71	TRANSISTOR 2SA1077
Q31	8-762-110-00	TRANSISTOR 2SC1670
Q32	8-729-663-47	TRANSISTOR 2SC1364
Q33	8-729-384-48	TRANSISTOR 2SA844
Q34	8-762-110-00	TRANSISTOR 2SC1670
Q35	8-762-210-00	TRANSISTOR 2SA840

Ref. No.	Part No.	Description
Q36	8-728-935-00	TRANSISTOR 2SC895
Q37	8-728-935-00	TRANSISTOR 2SC895
Q38	8-762-110-00	TRANSISTOR 2SC1670
Q39	8-729-663-47	TRANSISTOR 2SC1364
Q40	8-729-384-48	TRANSISTOR 2SA844
Q41	8-762-110-00	TRANSISTOR 2SC1670
Q42	8-762-210-00	TRANSISTOR 2SA840
Q43	8-728-935-00	TRANSISTOR 2SC895
Q44	8-728-935-00	TRANSISTOR 2SC895
Q45	8-762-110-00	TRANSISTOR 2SC1670
Q46	8-729-663-47	TRANSISTOR 2SC1364
Q47	8-729-384-48	TRANSISTOR 2SA844
Q48	8-762-110-00	TRANSISTOR 2SC1670
Q49	8-762-210-00	TRANSISTOR 2SA840
Q50	8-728-935-00	TRANSISTOR 2SC895
Q51	8-728-935-00	TRANSISTOR 2SC895

Ref. No.	Part No.	Description
⚠R2	1-213-155-00	RES, METAL 10K 5% 1W
R6	1-213-155-00	RES, METAL 10K 5% 1W
R10	1-213-155-00	RES, METAL 10K 5% 1W
R14	1-213-155-00	RES, METAL 10K 5% 1W
R18	1-213-155-00	RES, METAL 10K 5% 1W
R22	1-213-155-00	RES, METAL 10K 5% 1W
R26	1-213-153-00	RES, METAL 6.8K 5% 1W
R27	1-213-153-00	RES, METAL 6.8K 5% 1W
R28	1-213-149-00	RES, METAL 3.3K 5% 1W
R36	1-213-153-00	RES, METAL 6.8K 5% 1W
R37	1-213-153-00	RES, METAL 6.8K 5% 1W
R38	1-213-149-00	RES, METAL 3.3K 5% 1W
R46	1-213-153-00	RES, METAL 6.8K 5% 1W
R47	1-213-153-00	RES, METAL 6.8K 5% 1W
R48	1-213-149-00	RES, METAL 3.3K 5% 1W
R58	1-213-155-00	RES, METAL 10K 5% 1W
R59	1-213-155-00	RES, METAL 10K 5% 1W

Ref. No.	Part No.	Description
PLUNGER-A BOARD		
	A-6025-072-A	COMPLETE PCB, PLUNGER-A
C1	**1-101-005-00**	**CAP, CERAMIC 0.022 50V**
C2	**1-101-005-00**	**CAP, CERAMIC 0.022 50V**
C4	**1-131-373-00**	**CAP, TANTALUM 22 10% 16V**
CN329	1-508-742-00	TOP TYPE RECEPTACLE, 3P, MALE
CN330	1-508-901-00	TOP TYPE RECEPTACLE, 3P, MALE
CN345	1-508-934-00	SIDE TYPE RECEPTACLE, 3P, MALE
CN346	1-508-934-00	SIDE TYPE RECEPTACLE, 3P, MALE
CN347	1-508-903-00	TOP TYPE RECEPTACLE, 5P, MALE
CN348	1-508-935-00	SIDE TYPE RECEPTACLE, 5P, MALE
D1	**8-719-911-19**	**DIODE 1SS119**
D2	**8-719-200-02**	**DIODE 10E-2**
D3	**8-719-200-02**	**DIODE 10E-2**
D4	**8-719-200-02**	**DIODE 10E-2**
D5	**8-719-200-02**	**DIODE 10E-2**
D6	**8-719-200-02**	**DIODE 10E-2**
D7	**8-719-200-02**	**DIODE 10E-2**
D8	**8-719-200-02**	**DIODE 10E-2**
D9	**8-719-200-02**	**DIODE 10E-2**
D10	**8-719-200-02**	**DIODE 10E-2**
IC1	**8-759-145-58**	**IC μPC4558C (RC4558; RAYTHEON)**
Q1	**8-729-663-47**	**TRANSISTOR 2SC1364**
Q2	**8-729-663-47**	**TRANSISTOR 2SC1364**
Q3	**8-729-663-47**	**TRANSISTOR 2SC1364**
Q4	**8-760-524-10**	**TRANSISTOR 2SA772-4**
Q5	**8-729-177-32**	**TRANSISTOR 2SD733**
Q6	**8-729-177-32**	**TRANSISTOR 2SD733**
Q7	**8-729-177-32**	**TRANSISTOR 2SD733**
Q8	**8-729-177-32**	**TRANSISTOR 2SD733**
Q9	**8-729-177-32**	**TRANSISTOR 2SD733**
R1	**1-210-825-00**	**RES, CARBON 3.3M 5% 1/4W**
⚠ **R16**	**1-206-478-00**	**RES, METAL 43 5% 2W**
R17	**1-206-521-00**	**RES, METAL 27 5% 3W**
R20	**1-213-131-00**	**RES, METAL 100 5% 1W**
R21	**1-210-825-00**	**RES, CARBON 3.3M 5% 1/4W**

Ref. No.	Part No.	Description
REC AMP BOARD		
	A-6011-040-B	COMPLETE PCB, REC AMP (NTSC, PM)
	A-6011-041-B	COMPLETE PCB, REC AMP (PS)
C1	**1-101-005-00**	**CAP, CERAMIC 0.022 50V**
C3	**1-101-005-00**	**CAP, CERAMIC 0.022 50V**
C5	**1-101-005-00**	**CAP, CERAMIC 0.022 50V**
C6	**1-101-005-00**	**CAP, CERAMIC 0.022 50V**
C7	**1-101-005-00**	**CAP, CERAMIC 0.022 50V**
C8	**1-101-005-00**	**CAP, CERAMIC 0.022 50V**
C10	**1-101-005-00**	**CAP, CERAMIC 0.022 50V**
C11	**1-101-005-00**	**CAP, CERAMIC 0.022 50V**
C12	**1-101-005-00**	**CAP, CERAMIC 0.022 50V**
C13	**1-101-005-00**	**CAP, CERAMIC 0.022 50V**
C14	**1-101-005-00**	**CAP, CERAMIC 0.022 50V**
C15	**1-101-005-00**	**CAP, CERAMIC 0.022 50V**
C16	**1-101-005-00**	**CAP, CERAMIC 0.022 50V**
C17	**1-101-005-00**	**CAP, CERAMIC 0.022 50V**
C19	**1-101-005-00**	**CAP, CERAMIC 0.022 50V**
C20	**1-101-005-00**	**CAP, CERAMIC 0.022 50V**
C22	**1-101-005-00**	**CAP, CERAMIC 0.022 50V**
C23	**1-101-005-00**	**CAP, CERAMIC 0.022 50V**
C24	**1-101-005-00**	**CAP, CERAMIC 0.022 50V**
C25	**1-101-005-00**	**CAP, CERAMIC 0.022 50V**
C27	**1-101-005-00**	**CAP, CERAMIC 0.022 50V**
C28	**1-101-005-00**	**CAP, CERAMIC 0.022 50V**
C30	**1-101-005-00**	**CAP, CERAMIC 0.022 50V**
C32	**1-101-005-00**	**CAP, CERAMIC 0.022 50V**
C34	**1-107-085-00**	**CAP, MICA 100PF 5% 50V**
C35	**1-107-097-00**	**CAP, MICA 330PF 5% 50V**
C36	**1-107-085-00**	**CAP, MICA 100PF 5% 50V**
C37	**1-101-005-00**	**CAP, CERAMIC 0.022 50V**
C39	**1-101-001-00**	**CAP, CERAMIC 0.001 50V**
C40	**1-101-005-00**	**CAP, CERAMIC 0.022 50V**
C42	**1-101-005-00**	**CAP, CERAMIC 0.022 50V**
C43	**1-101-005-00**	**CAP, CERAMIC 0.022 50V**
C45	**1-101-005-00**	**CAP, CERAMIC 0.022 50V**
C46	**1-101-005-00**	**CAP, CERAMIC 0.022 50V**
C47	**1-101-005-00**	**CAP, CERAMIC 0.022 50V**
C48	**1-101-005-00**	**CAP, CERAMIC 0.022 50V**
C49	**1-101-005-00**	**CAP, CERAMIC 0.022 50V**
C51	**1-101-005-00**	**CAP, CERAMIC 0.022 50V**
C52	**1-101-005-00**	**CAP, CERAMIC 0.022 50V**
C53	**1-101-005-00**	**CAP, CERAMIC 0.022 50V**
C54	**1-101-005-00**	**CAP, CERAMIC 0.022 50V**
C55	**1-101-005-00**	**CAP, CERAMIC 0.022 50V**
C56	**1-101-005-00**	**CAP, CERAMIC 0.022 50V**
C57	**1-101-005-00**	**CAP, CERAMIC 0.022 50V**
C58	**1-101-005-00**	**CAP, CERAMIC 0.022 50V**

Ref. No.	Part No.	Description
C60	1-101-005-00	CAP, CERAMIC 0.022 50V
C61	1-101-005-00	CAP, CERAMIC 0.022 50V
C63	1-101-005-00	CAP, CERAMIC 0.022 50V
C64	1-101-005-00	CAP, CERAMIC 0.022 50V
C65	1-101-005-00	CAP, CERAMIC 0.022 50V
C66	1-101-005-00	CAP, CERAMIC 0.022 50V
C68	1-101-005-00	CAP, CERAMIC 0.022 50V
C70	1-101-005-00	CAP, CERAMIC 0.022 50V
C72	1-101-005-00	CAP, CERAMIC 0.022 50V
C74	1-107-085-00	CAP, MICA 100PF 5% 50V
C75	1-107-097-00	CAP, MICA 330PF 5% 50V
C76	1-107-085-00	CAP, MICA 100PF 5% 50V
C77	1-101-005-00	CAP, CERAMIC 0.022 50V
C79	1-101-001-00	CAP, CERAMIC 0.001 50V
C80	1-101-005-00	CAP, CERAMIC 0.022 50V
C82	1-101-005-00	CAP, CERAMIC 0.022 50V
C83	1-101-005-00	CAP, CERAMIC 0.022 50V
C85	1-101-005-00	CAP, CERAMIC 0.022 50V
C88	1-101-005-00	CAP, CERAMIC 0.022 50V
C89	1-101-005-00	CAP, CERAMIC 0.022 50V
C90	1-101-005-00	CAP, CERAMIC 0.022 50V
C91	1-107-068-00	CAP, MICA 20PF 5% 50V
C92	1-107-068-00	CAP, MICA 20PF 5% 50V
C93	1-101-005-00	CAP, CERAMIC 0.022 50V
C94	1-101-005-00	CAP, CERAMIC 0.022 50V
C95	1-131-408-00	CAP, TANTALUM 1 10% 35V
C96	1-131-408-00	CAP, TANTALUM 1 10% 35V
C97	1-101-005-00	CAP, CERAMIC 0.022 50V
C98	1-101-005-00	CAP, CERAMIC 0.022 50V
C99	1-131-408-00	CAP, TANTALUM 1 10% 35V
C100	1-131-408-00	CAP, TANTALUM 1 10% 35V
C101	1-109-541-00	CAP, MICA 200PF 5% 100V
C101	1-109-546-00	CAP, MICA 300PF 5% 100V
C102	1-109-541-00	CAP, MICA 200PF 5% 100V
C102	1-109-546-00	CAP, MICA 300PF 5% 100V
C104	1-107-077-00	CAP, MICA 47PF 5% 50V (NTSC, PM)
C104	1-107-068-00	CAP, MICA 20PF 5% 50V (PS)
C105	1-107-077-00	CAP, MICA 47PF 5% 50V (NTSC, PM)
C105	1-107-068-00	CAP, MICA 20PF 5% 50V (PS)
CN301	1-508-845-00	TOP TYPE RECEPTACLE, 6P, MALE
CN302	1-508-743-00	TOP TYPE RECEPTACLE, 5P, MALE
CN303	1-508-743-00	TOP TYPE RECEPTACLE, 5P, MALE
CN304	1-508-845-00	TOP TYPE RECEPTACLE, 6P, MALE
CN305	1-508-845-00	TOP TYPE RECEPTACLE, 6P, MALE

Ref. No.	Part No.	Description
D1	8-719-815-55	DIODE 1S1555
D2	8-719-815-55	DIODE 1S1555
D3	8-719-815-55	DIODE 1S1555
D4	8-719-815-55	DIODE 1S1555
D5	8-719-815-55	DIODE 1S1555
D6	8-719-815-55	DIODE 1S1555
D7	8-719-815-55	DIODE 1S1555
D8	8-719-815-55	DIODE 1S1555
D9	8-719-815-55	DIODE 1S1555
D10	8-719-815-55	DIODE 1S1555
D11	8-719-815-55	DIODE 1S1555
D12	8-719-815-55	DIODE 1S1555
D13	8-719-815-55	DIODE 1S1555
D14	8-719-815-55	DIODE 1S1555
D15	8-719-815-55	DIODE 1S1555
D16	8-719-815-55	DIODE 1S1555
D17	8-719-815-55	DIODE 1S1555
D18	8-719-815-55	DIODE 1S1555
D19	8-719-815-55	DIODE 1S1555
D20	8-719-815-55	DIODE 1S1555
D21	8-719-815-55	DIODE 1S1555
D22	8-719-815-55	DIODE 1S1555
IC1	8-759-014-45	IC MC1445G; MOTOROLA
IC2	8-759-014-45	IC MC1445G; MOTOROLA
L1	1-407-190-00	INDUCTOR MICRO 10
L2	1-407-190-00	INDUCTOR MICRO 10
L3	1-407-190-00	INDUCTOR MICRO 10
L4	1-407-190-00	INDUCTOR MICRO 10
L5	1-407-565-00	COIL, VAR 2.2mH
L6	1-407-190-00	INDUCTOR MICRO 10
L7	1-407-190-00	INDUCTOR MICRO 10
L8	1-407-190-00	INDUCTOR MICRO 10
L9	1-407-190-00	INDUCTOR MICRO 10
L10	1-407-565-00	COIL, VAR 2.2mH
Q1	8-724-375-01	TRANSISTOR 2SC403C
Q2	8-724-375-01	TRANSISTOR 2SC403C
Q3	8-724-375-01	TRANSISTOR 2SC403C
Q4	8-724-375-01	TRANSISTOR 2SC403C
Q5	8-724-375-01	TRANSISTOR 2SC403C
Q6	8-724-375-01	TRANSISTOR 2SC403C
Q7	8-729-125-20	TRANSISTOR 2SC1252
Q8	8-729-125-20	TRANSISTOR 2SC1252
Q9	8-729-663-47	TRANSISTOR 2SC1364
Q10	8-729-612-77	TRANSISTOR 2SA1027R

Ref. No.	Part No.	Description
Q11	8-725-412-00	TRANSISTOR 2SC1124
Q12	8-727-632-00	TRANSISTOR 2SA706
Q14	8-729-663-47	TRANSISTOR 2SC1364
Q15	8-729-612-77	TRANSISTOR 2SA1027R
Q16	8-725-412-00	TRANSISTOR 2SC1124
Q17	8-727-632-00	TRANSISTOR 2SA706
Q19	8-729-663-47	TRANSISTOR 2SC1364
Q20	8-724-375-01	TRANSISTOR 2SC403C
Q21	8-724-375-01	TRANSISTOR 2SC403C
Q22	8-724-375-01	TRANSISTOR 2SC403C
Q23	8-724-375-01	TRANSISTOR 2SC403C
Q24	8-724-375-01	TRANSISTOR 2SC403C
Q25	8-724-375-01	TRANSISTOR 2SC403C
Q26	8-729-125-20	TRANSISTOR 2SC1252
Q27	8-729-125-20	TRANSISTOR 2SC1252
Q28	8-729-663-47	TRANSISTOR 2SC1364
Q29	8-729-612-77	TRANSISTOR 2SA1027R
Q30	8-725-412-00	TRANSISTOR 2SC1124
Q31	8-727-632-00	TRANSISTOR 2SA706
Q33	8-729-663-47	TRANSISTOR 2SC1364
Q34	8-729-612-77	TRANSISTOR 2SA1027R
Q35	8-725-412-00	TRANSISTOR 2SC1124
Q36	8-727-632-00	TRANSISTOR 2SA706
Q38	8-725-412-00	TRANSISTOR 2SC1124
Q39	8-725-412-00	TRANSISTOR 2SC1124
Q40	8-725-412-00	TRANSISTOR 2SC1124
Q41	8-725-412-00	TRANSISTOR 2SC1124
Q42	8-729-663-47	TRANSISTOR 2SC1364
Q43	8-725-412-00	TRANSISTOR 2SC1124
Q44	8-725-412-00	TRANSISTOR 2SC1124
Q45	8-725-412-00	TRANSISTOR 2SC1124
Q46	8-725-412-00	TRANSISTOR 2SC1124
Q47	8-729-663-47	TRANSISTOR 2SC1364
Q48	8-729-612-77	TRANSISTOR 2SA1027R
Q49	8-724-375-01	TRANSISTOR 2SC403C
Q50	8-723-302-00	TRANSISTOR 2SK43-2
R66	1-224-914-00	RES, VAR, METAL 100
R74	1-224-914-00	RES, VAR, METAL 100
R75	1-244-843-00	RES, CARBON 56 5% 1/2W
R76	1-244-843-00	RES, CARBON 56 5% 1/2W
R150	1-224-914-00	RES, VAR, METAL 100
R158	1-224-914-00	RES, VAR, METAL 100
R159	1-244-843-00	RES, CARBON 56 5% 1/2W
R160	1-244-843-00	RES, CARBON 56 5% 1/2W
R178	1-244-870-00	RES, CARBON 750 5% 1/2W
R179	1-244-870-00	RES, CARBON 750 5% 1/2W
R180	1-244-870-00	RES, CARBON 750 5% 1/2W
R181	1-244-870-00	RES, CARBON 750 5% 1/2W
R182	1-244-846-00	RES, CARBON 75 5% 1/2W
R183	1-244-846-00	RES, CARBON 75 5% 1/2W
R192	1-224-937-00	RES, VAR, METAL 1K
R193	1-224-937-00	RES, VAR, METAL 1K
R194	1-224-934-00	RES, VAR, METAL 100
R195	1-224-934-00	RES, VAR, METAL 100
T1	1-433-194-00	TRANSFORMER, OSCILLATOR
T2	1-433-194-00	TRANSFORMER, OSCILLATOR

REEL AUX-A BOARD

	A-6015-047-A	COMPLETE PCB, REEL AUX-A
C6	1-101-004-00	CAP, CERAMIC 0.01 50V
CN320	1-508-901-00	TOP TYPE RECEPTACLE, 3P, MALE
CN321	1-508-708-00	TOP TYPE RECEPTACLE, 4P, MALE
CN322	1-508-707-11	TOP TYPE RECEPTACLE, 3P, MALE
CN323	1-508-949-00	TOP TYPE RECEPTACLE, 12P, MALE
CN324	1-508-710-00	TOP TYPE RECEPTACLE, 6P, MALE
CN325	1-508-708-00	TOP TYPE RECEPTACLE, 4P, MALE
CN326	1-508-707-11	TOP TYPE RECEPTACLE, 3P, MALE
CN327	1-508-708-00	TOP TYPE RECEPTACLE, 4P, MALE
CN328	1-508-707-11	TOP TYPE RECEPTACLE, 3P, MALE
D1	8-719-126-10	DIODE 1S2610
D2	8-719-126-10	DIODE 1S2610
D3	8-719-126-10	DIODE 1S2610
D4	8-719-126-10	DIODE 1S2610
D5	8-719-126-10	DIODE 1S2610
D6	8-719-126-10	DIODE 1S2610
D7	8-719-126-10	DIODE 1S2610
D8	8-719-126-10	DIODE 1S2610
D9	8-719-911-19	DIODE 1SS119
D10	8-719-911-19	DIODE 1SS119
D11	8-719-911-19	DIODE 1SS119
D12	8-719-911-19	DIODE 1SS119

Ref. No.	Part No.	Description
L1	1-407-492-00	INDUCTOR MICRO 1mH
Q1	8-729-663-47	TRANSISTOR 2SC1364
Q2	8-729-663-47	TRANSISTOR 2SC1364
Q3	8-729-663-47	TRANSISTOR 2SC1364
Q4	8-729-663-47	TRANSISTOR 2SC1364
Q5	8-729-612-77	TRANSISTOR 2SA1027R
Q6	8-729-663-47	TRANSISTOR 2SC1364
Q7	8-729-663-47	TRANSISTOR 2SC1364
Q8	8-729-177-32	TRANSISTOR 2SD733
Q9	8-729-663-47	TRANSISTOR 2SC1364
Q10	8-729-177-32	TRANSISTOR 2SD733
Q11	8-729-612-77	TRANSISTOR 2SA1027R
Q12	8-729-177-32	TRANSISTOR 2SD733
⚠R1	1-217-331-00	RES, WIRE 5.6 10% 7W F
R2	1-217-331-00	RES, WIRE 5.6 10% 7W F
R24	1-214-100-00	RES, METAL 47 1/4W 1%
R25	1-214-100-00	RES, METAL 47 1/4W 1%
RY1	1-515-390-00	RELAY, SOLID STATE, 18V/32mA
RY2	1-515-389-00	RELAY, SOLID STATE, 18V/32mA
RY3	1-515-390-00	RELAY, SOLID STATE, 18V/32mA
RY4	1-515-390-00	RELAY, SOLID STATE, 18V/32mA
RY5	1-515-389-00	RELAY, SOLID STATE, 18V/32mA
RY6	1-515-390-00	RELAY, SOLID STATE, 18V/32mA
RY7	1-515-390-00	RELAY, SOLID STATE, 18V/32mA
RY8	1-515-390-00	RELAY, SOLID STATE, 18V/32mA
RY9	1-515-390-00	RELAY, SOLID STATE, 18V/32mA
RY10	1-515-389-00	RELAY, SOLID STATE, 18V/32mA
RY11	1-515-390-00	RELAY, SOLID STATE, 18V/32mA
RY12	1-515-390-00	RELAY, SOLID STATE, 18V/32mA
RY13	1-515-390-00	RELAY, SOLID STATE, 18V/32mA
RY14	1-515-389-00	RELAY, SOLID STATE, 18V/32mA
RY15	1-515-390-00	RELAY, SOLID STATE, 18V/32mA
RY16	1-515-390-00	RELAY, SOLID STATE, 18V/32mA
SW1	1-516-994-00	SWITCH, SLIDE
SW2	1-552-095-00	SWITCH, ROCKER (POWER FREQ. SEL.)

REEL-1A BOARD

Ref. No.	Part No.	Description
	A-6015-048-A	COMPLETE PCB, REEL-1A
C2	1-131-348-00	CAP, TANTALUM 1.5 10% 35V
C3	1-131-404-00	CAP, TANTALUM 0.22 10% 35V
C5	1-131-404-00	CAP, TANTALUM 0.22 10% 35V
C6	1-131-348-00	CAP, TANTALUM 1.5 10% 35V
C7	1-131-403-00	CAP, TANTALUM 0.15 10% 35V
C8	1-131-407-00	CAP, TANTALUM 0.68 10% 35V
C9	1-131-404-00	CAP, TANTALUM 0.22 10% 35V
C10	1-131-405-00	CAP, TANTALUM 0.33 10% 35V
C12	1-131-403-00	CAP, TANTALUM 0.15 10% 35V
C13	1-131-407-00	CAP, TANTALUM 0.68 10% 35V
C14	1-131-404-00	CAP, TANTALUM 0.22 10% 35V
C15	1-131-405-00	CAP, TANTALUM 0.33 10% 35V
C29	1-131-366-00	CAP, TANTALUM 15 10% 20V
C30	1-131-380-00	CAP, TANTALUM 33 10% 20V
C31	1-101-006-00	CAP, CERAMIC 0.047 50V
C35	1-131-406-00	CAP, TANTALUM 0.47 10% 35V
C36	1-131-373-00	CAP, TANTALUM 22 10% 16V
C37	1-131-351-00	CAP, TANTALUM 4.7 10% 35V
C38	1-131-406-00	CAP, TANTALUM 0.47 10% 35V
C39	1-131-407-00	CAP, TANTALUM 0.68 10% 35V
C40	1-131-407-00	CAP, TANTALUM 0.68 10% 35V
C41	1-101-006-00	CAP, CERAMIC 0.047 50V
C43	1-101-006-00	CAP, CERAMIC 0.047 50V
C49	1-101-006-00	CAP, CERAMIC 0.047 50V
C51	1-131-353-00	CAP, TANTALUM 10 10% 35V
C52	1-101-006-00	CAP, CERAMIC 0.047 50V
C56	1-131-348-00	CAP, TANTALUM 1.5 10% 35V
C57	1-131-351-00	CAP, TANTALUM 4.7 10% 35V
C58	1-101-006-00	CAP, CERAMIC 0.047 50V
C60	1-101-006-00	CAP, CERAMIC 0.047 50V
C61	1-101-006-00	CAP, CERAMIC 0.047 50V
C63	1-101-006-00	CAP, CERAMIC 0.047 50V
C64	1-101-006-00	CAP, CERAMIC 0.047 50V
C66	1-101-006-00	CAP, CERAMIC 0.047 50V
C67	1-131-408-00	CAP, TANTALUM 1 10% 35V
C69	1-107-085-00	CAP, MICA 100PF 5% 50V
C70	1-101-006-00	CAP, CERAMIC 0.047 50V
C72	1-101-006-00	CAP, CERAMIC 0.047 50V
C73	1-101-006-00	CAP, CERAMIC 0.047 50V
C75	1-101-006-00	CAP, CERAMIC 0.047 50V
C77	1-101-006-00	CAP, CERAMIC 0.047 50V
C82	1-131-350-00	CAP, TANTALUM 3.3 10% 35V
C83	1-131-350-00	CAP, TANTALUM 3.3 10% 35V
C84	1-131-351-00	CAP, TANTALUM 4.7 10% 35V
C85	1-131-353-00	CAP, TANTALUM 10 10% 35V
C86	1-131-366-00	CAP, TANTALUM 15 10% 20V
C89, C90	1-102-108-00	CAP, CERAMIC 150P 10% 50V
C92	1-131-403-00	CAP, TANTALUM 0.15 10% 35V

Ref. No.	Part No.	Description
D1	8-719-911-19	DIODE 1SS119
D2	8-719-911-19	DIODE 1SS119
D3	8-719-911-19	DIODE 1SS119
D4	8-719-911-19	DIODE 1SS119
D5	8-719-911-19	DIODE 1SS119
D6	8-719-911-19	DIODE 1SS119
D7	8-719-911-19	DIODE 1SS119
D8	8-719-911-19	DIODE 1SS119
D9	8-719-911-19	DIODE 1SS119
D11	8-719-709-25	DIODE 1S1925P
D12	8-719-709-25	DIODE 1S1925P
D13	8-719-911-19	DIODE 1SS119
D14	8-719-911-19	DIODE 1SS119
D15	8-719-709-25	DIODE 1S1925P
D16	8-719-709-25	DIODE 1S1925P
D17	8-719-151-07	DIODE RD5.1E-B
D19	8-719-911-19	DIODE 1SS119
D20	8-719-911-19	DIODE 1SS119
D21	8-719-911-19	DIODE 1SS119
D22	8-719-911-19	DIODE 1SS119
D23	8-719-911-19	DIODE 1SS119
D24	8-719-911-19	DIODE 1SS119
D25	8-719-911-19	DIODE 1SS119
FB1	1-535-178-00	FERRITE BEAD
IC1	8-759-145-58	IC μPC4558C (RC4558; RAYTHEON)
IC2	8-759-240-52	IC TC4052BP, C-MOS (CD4052BE; RCA)
IC3	8-759-145-58	IC μPC4558C (RC4558; RAYTHEON)
IC4	8-759-240-52	IC TC4052BP, C-MOS (CD4052BE; RCA)
IC5	8-759-145-58	IC μPC4558C (RC4558; RAYTHEON)
IC6	8-759-145-58	IC μPC4558C (RC4558; RAYTHEON)
IC7	8-759-145-58	IC μPC4558C (RC4558; RAYTHEON)
IC8	8-759-145-58	IC μPC4558C (RC4558; RAYTHEON)
IC9	8-759-133-90	IC μPC339C (LM339; NSC)
IC10	8-759-145-58	IC μPC4558C (RC4558; RAYTEON)
IC11	8-759-240-52	IC TC4052BP, C-MOS (CD4052BE; RCA)
IC12	8-759-240-66	IC TC4066BP, C-MOS (CD4066BE; RCA)
IC13	8-759-240-66	IC TC4066BP, C-MOS (CD4066BE; RCA)
IC14	8-759-240-66	IC TC4066BP, C-MOS (CD4066BE; RCA)
IC15	8-759-240-66	IC TC4066BP, C-MOS (CD4066BE; RCA)

Ref. No.	Part No.	Description
IC16	8-759-145-58	IC μPC4558C (RC4558; RAYTHEON)
IC17	8-759-133-90	IC μPC339C (LM339; NSC)
IC18	8-759-753-29	IC MB7052-R8CA, PROM; FUJITSU
IC19	8-759-753-34	IC MB7053-R9CA, PROM; FUJITSU
IC20	8-759-753-28	IC MB7052-R0CA, PROM; FUJITSU
IC21	8-759-753-34	IC MB7053-R9CA
IC22	8-759-045-84	IC MC14584BCP, C-MOS; MOTOROLA
IC23	8-759-753-57	IC MB7053-R3CB, PROM; FUJITSU
IC24	8-759-240-51	IC TC4051BP, C-MOS (CD4051BE; RCA)
IC25	8-759-240-51	IC TC4051BP, C-MOS (CD4051BE; RCA)
IC26	8-759-045-51	IC MC14551BCP, C-MOS; MOTOROLA
IC27	8-759-240-71	IC TC4071BP, C-MOS (CD4071BE; RCA)
IC28	8-759-753-35	IC MB7057-R2CA, PROM; FUJITSU
IC29	8-759-240-81	IC TC4081BP, C-MOS (CD4081BE; RCA)
IC30	8-759-240-01	IC TC4001BP, C-MOS (CD4001BE; RCA)
IC31	8-759-240-53	IC TC4053BP, C-MOS (CD4053BE; RCA)
IC32	8-759-045-38	IC MC14538BCP, C-MOS; MOTOROLA
IC33	8-759-240-23	IC TC4023BP, C-MOS (CD4023BE; RCA)
IC34	8-759-753-27	MB7052-R4CA, PROM; FUJITSU
IC35	8-759-753-26	MB7052-R5CA, PROM; FUJITSU
IC36	8-759-240-49	IC TC4049BP, C-MOS (CD4049BE; RCA)
IC37	8-759-240-23	IC TC4023BP, C-MOS (CD4023BE; RCA)
IC38	8-759-221-93	IC TC40H193P, C-MOS; TOSHIBA
IC39	8-759-221-93	IC TC40H193P, C-MOS; TOSHIBA
IC40	8-759-240-81	IC TC4081BP, C-MOS (CD4081BE; RCA)
IC41	8-759-753-35	IC MB7057-R2CA, PROM; FUJITSU
IC42	8-759-901-74	IC SN74LS174N, TTL; TI
IC43	8-759-240-71	IC TC4071BP, C-MOS (CD4071BE; RCA)
IC44	8-759-240-11	IC TC4011BP, C-MOS (CD4011BE; RCA)
IC45	8-759-240-49	IC TC4049BP, C-MOS (CD4049BE; RCA)
IC46	8-759-040-77	IC MC14077BCP, C-MOS; MOTOROLA
IC47	8-759-240-73	IC TC4073BP, C-MOS (CD4073BE; RCA)
IC48	8-759-901-74	IC SN74LS174N, TTL; TI
IC49	8-759-901-74	IC SN74LS174N, TTL; TI
IC50	8-759-240-75	IC TC4075BP, C-MOS (CD4075BE; RCA)

Ref. No.	Part No.	Description
IC51	8-759-240-73	IC TC4073BP, C-MOS (CD4073BE; RCA)
IC52	8-759-240-71	IC TC4071BP, C-MOS (CD4071BE; RCA)
IC53	8-759-240-81	IC TC4081BP, C-MOS (CD4081BE; RCA)
IC54	8-759-245-20	IC TC4520BP, C-MOS (MC14520BCP; MOTOROLA)
IC55	8-759-901-74	IC SN74LS174N, TTL; TI
IC56	8-759-240-50	IC TC4050BP, C-MOS (CD4050BE; RCA)
IC57	8-759-245-20	IC TC4520BP, C-MOS (MC14520BCP; MOTOROLA)
IC58	8-759-245-20	IC TC4520BP, C-MOS (MC14520BCP; MOTOROLA)
IC59	8-759-045-51	IC MC14551BCP, C-MOS; MOTOROLA
IC60	8-759-240-15	IC TC4015BP, C-MOS (CD4015BE; RCA)
IC61	8-759-240-15	IC TC4015BP, C-MOS (CD4015BE; RCA)
R1	1-214-154-00	RES, METAL 8.2K 1% 1/4W
R2	1-214-160-00	RES, METAL 15K 1% 1/4W
R3	1-214-175-00	RES, METAL 62K 1% 1/4W
R4	1-214-164-00	RES, METAL 22K 1% 1/4W
R5	1-214-128-00	RES, METAL 680 1% 1/4W
R6	1-214-156-00	RES, METAL 10K 1% 1/4W
R7	1-214-158-00	RES, METAL 12K 1% 1/4W
R8	1-214-180-00	RES, METAL 100K 1% 1/4W
R9	1-214-174-00	RES, METAL 56K 1% 1/4W
R10	1-214-169-00	RES, METAL 36K 1% 1/4W
R11	1-214-124-00	RES, METAL 470 1% 1/4W
R12	1-214-163-00	RES, METAL 20K 1% 1/4W
R13	1-214-163-00	RES, METAL 20K 1% 1/4W
R14	1-214-156-00	RES, METAL 10K 1% 1/4W
R15	1-214-180-00	RES, METAL 100K 1% 1/4W
R16	1-214-163-00	RES, METAL 20K 1% 1/4W
R17	1-214-180-00	RES, METAL 100K 1% 1/4W
R18	1-214-166-00	RES, METAL 27K 1% 1/4W
R19	1-214-180-00	RES, METAL 100K 1% 1/4W
R20	1-214-175-00	RES, METAL 62K 1% 1/4W
R21	1-214-172-00	RES, METAL 47K 1% 1/4W
R22	1-214-165-00	RES, METAL 24K 1% 1/4W
R23	1-214-132-00	RES, METAL 1K 1% 1/4W
R24	1-214-150-00	RES, METAL 5.6K 1% 1/4W
R25	1-214-176-00	RES, METAL 68K 1% 1/4W
R26	1-214-176-00	RES, METAL 68K 1% 1/4W
R27	1-214-146-00	RES, METAL 3.9K 1% 1/4W
R28	1-214-132-00	RES, METAL 1K 1% 1/4W
R29	1-214-176-00	RES, METAL 68K 1% 1/4W
R30	1-214-176-00	RES, METAL 68K 1% 1/4W
R31	1-214-146-00	RES, METAL 3.9K 1% 1/4W
R32	1-214-128-00	RES, METAL 680 1% 1/4W
R33	1-214-164-00	RES, METAL 22K 1% 1/4W
R34	1-214-160-00	RES, METAL 15K 1% 1/4W
R35	1-214-160-00	RES, METAL 15K 1% 1/4W
R36	1-214-164-00	RES, METAL 22K 1% 1/4W
R37	1-214-164-00	RES, METAL 22K 1% 1/4W
R38	1-214-154-00	RES, METAL 8.2K 1% 1/4W
R39	1-214-156-00	RES, METAL 10K 1% 1/4W
R40	1-214-159-00	RES, METAL 13K 1% 1/4W
R41	1-214-156-00	RES, METAL 10K 1% 1/4W
R42	1-214-148-00	RES, METAL 4.7K 1% 1/4W
R43	1-214-147-00	RES, METAL 4.3K 1% 1/4W
R46	1-214-154-00	RES, METAL 8.2K 1% 1/4W
R47	1-214-148-00	RES, METAL 4.7K 1% 1/4W
R48	1-214-148-00	RES, METAL 4.7K 1% 1/4W
R49	1-214-148-00	RES, METAL 4.7K 1% 1/4W
R50	1-214-180-00	RES, METAL 100K 1% 1/4W
R51	1-214-164-00	RES, METAL 22K 1% 1/4W
R52	1-214-124-00	RES, METAL 470 1% 1/4W
R53	1-214-158-00	RES, METAL 12K 1% 1/4W
R54	1-214-172-00	RES, METAL 47K 1% 1/4W
R55	1-214-168-00	RES, METAL 33K 1% 1/4W
R56	1-214-156-00	RES, METAL 10K 1% 1/4W
R57	1-214-172-00	RES, METAL 47K 1% 1/4W
R58	1-214-148-00	RES, METAL 4.7K 1% 1/4W
R59	1-214-158-00	RES, METAL 12K 1% 1/4W
R60	1-214-172-00	RES, METAL 47K 1% 1/4W
R61	1-214-180-00	RES, METAL 100K 1% 1/4W
R62	1-214-180-00	RES, METAL 100K 1% 1/4W
R63	1-214-165-00	RES, METAL 24K 1% 1/4W
R64	1-214-158-00	RES, METAL 12K 1% 1/4W
R65	1-214-172-00	RES, METAL 47K 1% 1/4W
R66	1-214-180-00	RES, METAL 100K 1% 1/4W
R67	1-214-154-00	RES, METAL 8.2K 1% 1/4W
R68	1-214-165-00	RES, METAL 24K 1% 1/4W
R69	1-214-158-00	RES, METAL 12K 1% 1/4W
R70	1-214-172-00	RES, METAL 47K 1% 1/4W
R71	1-214-180-00	RES, METAL 100K 1% 1/4W
R72	1-214-180-00	RES, METAL 100K 1% 1/4W
R73	1-214-150-00	RES, METAL 5.6K 1% 1/4W
R74	1-214-154-00	RES, METAL 8.2K 1% 1/4W
R75	1-214-158-00	RES, METAL 12K 1% 1/4W
R76	1-214-180-00	RES, METAL 100K 1% 1/4W
R77	1-214-172-00	RES, METAL 47K 1% 1/4W
R78	1-214-165-00	RES, METAL 24K 1% 1/4W
R79	1-214-152-00	RES, METAL 6.8K 1% 1/4W
R80	1-214-174-00	RES, METAL 56K 1% 1/4W
R81	1-214-180-00	RES, METAL 100K 1% 1/4W
R82	1-214-180-00	RES, METAL 100K 1% 1/4W

Ref. No.	Part No.	Description
R83	1-214-176-00	RES, METAL 68K 1% 1/4W
R84	1-214-156-00	RES, METAL 10K 1% 1/4W
R85	1-214-156-00	RES, METAL 10K 1% 1/4W
R86	1-214-156-00	RES, METAL 10K 1% 1/4W
R87	1-214-150-00	RES, METAL 5.6K 1% 1/4W
R88	1-214-180-00	RES, METAL 100K 1% 1/4W
R91	1-214-148-00	RES, METAL 4.7K 1% 1/4W
R92	1-214-156-00	RES, METAL 10K 1% 1/4W
R93	1-214-168-00	RES, METAL 33K 1% 1/4W
R94	1-214-160-00	RES, METAL 15K 1% 1/4W
R96	1-214-156-00	RES, METAL 10K 1% 1/4W
R97	1-214-132-00	RES, METAL 1K 1% 1/4W
R98	1-214-149-00	RES, METAL 5.1K 1% 1/4W
R99	1-214-148-00	RES, METAL 4.7K 1% 1/4W
R100	1-214-148-00	RES, METAL 4.7K 1% 1/4W
R101	1-214-164-00	RES, METAL 22K 1% 1/4W
R102	1-214-164-00	RES, METAL 22K 1% 1/4W
R103	1-214-164-00	RES, METAL 22K 1% 1/4W
R104	1-214-180-00	RES, METAL 100K 1% 1/4W
R105	1-214-180-00	RES, METAL 100K 1% 1/4W
R106	1-214-156-00	RES, METAL 10K 1% 1/4W
R107	1-214-180-00	RES, METAL 100K 1% 1/4W
R108	1-214-180-00	RES, METAL 100K 1% 1/4W
R109	1-214-140-00	RES, METAL 2.2K 1% 1/4W
R110	1-214-156-00	RES, METAL 10K 1% 1/4W
R111	1-214-144-00	RES, METAL 3.3K 1% 1/4W
R112	1-214-164-00	RES, METAL 22K 1% 1/4W
R113	1-214-180-00	RES, METAL 100K 1% 1/4W
R114	1-214-156-00	RES, METAL 10K 1% 1/4W
R115	1-214-156-00	RES, METAL 10K 1% 1/4W
R116	1-214-180-00	RES, METAL 100K 1% 1/4W
R117	1-214-180-00	RES, METAL 100K 1% 1/4W
R118	1-214-156-00	RES, METAL 10K 1% 1/4W
R119	1-214-148-00	RES, METAL 4.7K 1% 1/4W
R120	1-214-156-00	RES, METAL 10K 1% 1/4W
R121	1-214-180-00	RES, METAL 100K 1% 1/4W
R122	1-214-143-00	RES, METAL 3K 1% 1/4W
R123	1-214-177-00	RES, METAL 75K 1% 1/4W
R124	1-214-156-00	RES, METAL 10K 1% 1/4W
R125	1-214-156-00	RES, METAL 10K 1% 1/4W
R126	1-214-156-00	RES, METAL 10K 1% 1/4W
R128	1-214-136-00	RES, METAL 1.5K 1% 1/4W
R129	1-214-131-00	RES, METAL 910 1% 1/4W
R130	1-214-156-00	RES, METAL 10K 1% 1/4W
R131	1-214-128-00	RES, METAL 680 1% 1/4W
R132	1-214-156-00	RES, METAL 10K 1% 1/4W
R133	1-214-180-00	RES, METAL 100K 1% 1/4W
R134	1-214-180-00	RES, METAL 100K 1% 1/4W
R135	1-214-120-00	RES, METAL 330 1% 1/4W
R136	1-214-148-00	RES, METAL 4.7K 1% 1/4W
R138	1-214-180-00	RES, METAL 100K 1% 1/4W
R139	1-214-180-00	RES, METAL 100K 1% 1/4W
R140	1-214-168-00	RES, METAL 33K 1% 1/4W
R141	1-214-180-00	RES, METAL 100K 1% 1/4W
RB1	1-231-525-00	RESISTOR BLOCK, 4.7K x 4
RB2	1-231-525-00	RESISTOR BLOCK, 4.7K x 4
RB3	1-231-525-00	RESISTOR BLOCK, 4.7K x 4
RB4	1-231-525-00	RESISTOR BLOCK, 4.7K x 4
RB5	1-231-525-00	RESISTOR BLOCK, 4.7K x 4
RB6	1-231-525-00	RESISTOR BLOCK, 4.7K x 4
RB7	1-231-525-00	RESISTOR BLOCK, 4.7K x 4
RB8	1-231-525-00	RESISTOR BLOCK, 4.7K x 4
RB9	1-231-525-00	RESISTOR BLOCK, 4.7K x 4
RB10	1-231-525-00	RESISTOR BLOCK, 4.7K x 4
RB11	1-231-525-00	RESISTOR BLOCK, 4.7K x 4
RB12	1-231-525-00	RESISTOR BLOCK, 4.7K x 4
RB13	1-231-525-00	RESISTOR BLOCK, 4.7K x 4
RB14	1-231-525-00	RESISTOR BLOCK, 4.7K x 4
RB15	1-231-525-00	RESISTOR BLOCK, 4.7K x 4
RV1	1-224-941-00	RES, VAR, METAL 20K
RV2	1-224-942-00	RES, VAR, METAL 50K
RV3	1-224-940-00	RES, VAR, METAL 10K
RV4	1-224-940-00	RES, VAR, METAL 10K
RV5	1-224-940-00	RES, VAR, METAL 10K
RV6	1-224-940-00	RES, VAR, METAL 10K
RV7	1-224-941-00	RES, VAR, METAL 20K
RV8	1-224-941-00	RES, VAR, METAL 20K
RV9	1-224-940-00	RES, VAR, METAL 10K

REEL-2A BOARD

	A-6015-049-A	COMPLETE PCB, REEL-2A
C1	1-101-006-00	CAP, CERAMIC 0.047 50V
C5	1-131-408-00	CAP, TANTALUM 1 10% 35V
C6	1-131-408-00	CAP, TANTALUM 1 10% 35V
C9	1-131-405-00	CAP, TANTALUM 0.33 10% 35V
C11	1-131-380-00	CAP, TANTALUM 33 10% 10V
C15	1-131-373-00	CAP, TANTALUM 22 10% 16V
C16	1-131-402-00	CAP, TANTALUM 0.1 10% 35V
C19	1-101-006-00	CAP, CERAMIC 0.047 50V
C20	1-131-404-00	CAP, TANTALUM 0.22 10% 35V
C21	1-131-405-00	CAP, TANTALUM 0.33 10% 35V

Ref. No.	Part No.	Description
C26	1-131-406-00	CAP, TANTALUM 0.47 10% 35V
C27	1-101-006-00	CAP, CERAMIC 0.047 50V
C28	1-131-407-00	CAP, TANTALUM 0.68 10% 35V
C29	1-131-407-00	CAP, TANTALUM 0.68 10% 35V
C30	1-131-407-00	CAP, TANTALUM 0.68 10% 35V
C31	1-131-406-00	CAP, TANTALUM 0.47 10% 35V
C33	1-131-373-00	CAP, TANTALUM 22 10% 16V
C36	1-131-408-00	CAP, TANTALUM 1 10% 35V
C38	1-131-405-00	CAP, TANTALUM 0.33 10% 35V
C39	1-131-408-00	CAP, TANTALUM 1 10% 35V
C40	1-131-405-00	CAP, TANTALUM 0.33 10% 35V
C53	1-131-348-00	CAP, TANTALUM 1.5 10% 35V
C54	1-101-006-00	CAP, CERAMIC 0.047 50V
C55	1-131-403-00	CAP, TANTALUM 0.15 10% 35V
C57	1-131-402-00	CAP, TANTALUM 0.1 10% 35V
C58	1-131-359-00	CAP, TANTALUM 10 10% 25V
C59	1-131-366-00	CAP, TANTALUM 15 10% 20V
C60	1-131-350-00	CAP, TANTALUM 3.3 10% 35V
C62	1-131-406-00	CAP, TANTALUM 0.47 10% 35V
C66	1-101-006-00	CAP, CERAMIC 0.047 50V
C69	1-101-006-00	CAP, CERAMIC 0.047 50V
C74	1-131-350-00	CAP, TANTALUM 3.3 10% 35V
C75	1-131-348-00	CAP, TANTALUM 1.5 10% 35V
C76	1-131-348-00	CAP, TANTALUM 1.5 10% 35V
C79	1-131-407-00	CAP, TANTALUM 0.68 10% 35V
C82	1-131-348-00	CAP, TANTALUM 1.5 10% 35V
C88	1-101-006-00	CAP, CERAMIC 0.047 50V
C90	1-101-006-00	CAP, CERAMIC 0.047 50V
C93	1-101-006-00	CAP, CERAMIC 0.047 50V
C94	1-101-006-00	CAP, CERAMIC 0.047 50V
C97	1-131-405-00	CAP, TANTALUM 0.33 10% 35V
D1	8-719-801-02	DIODE TLR102
D2	8-719-801-02	DIODE TLR102
D3	8-719-911-19	DIODE 1SS119
D4	8-719-911-19	DIODE 1SS119
D5	8-719-911-19	DIODE 1SS119
D6	8-719-911-19	DIODE 1SS119
D7	8-719-911-19	DIODE 1SS119
D8	8-719-911-19	DIODE 1SS119
D9	8-719-151-07	DIODE RD5.1E-B
D10	8-719-911-19	DIODE 1SS119
D11	8-719-151-07	DIODE RD5.1E-B
D12	8-719-911-19	DIODE 1SS119
D13	8-719-911-19	DIODE 1SS119
D14	8-719-709-25	DIODE 1S1925P
D15	8-719-709-25	DIODE 1S1925P

Ref. No.	Part No.	Description
D16	8-719-709-25	DIODE 1S1925P
D17	8-719-709-25	DIODE 1S1925P
D18	8-719-911-19	DIODE 1SS119
D19	8-719-911-19	DIODE 1SS119
D20	8-719-911-19	DIODE 1SS119
D21	8-719-911-19	DIODE 1SS119
D22	8-719-911-19	DIODE 1SS119
D23	8-719-911-19	DIODE 1SS119
D24	8-719-911-19	DIODE 1SS119
D25	8-719-911-19	DIODE 1SS119
D26	8-719-911-19	DIODE 1SS119
D27	8-719-911-19	DIODE 1SS119
D28	8-719-911-19	DIODE 1SS119
D29	8-719-911-19	DIODE 1SS119
D30	8-719-911-19	DIODE 1SS119
D31	8-719-911-19	DIODE 1SS119
D32	8-719-911-19	DIODE 1SS119
D33	8-719-151-07	DIODE RD5.1E-B
D34	8-719-911-19	DIODE 1SS119
FB1	1-535-178-00	FERRITE BEAD
IC1	8-759-045-84	IC MC14584BCP, C-MOS; MOTOROLA
IC2	8-759-045-38	IC MC14538BCP, C-MOS; MOTOROLA
IC3	8-759-984-13	IC MB84013M, C-MOS; FUJITSU
IC4	8-759-240-49	IC TC4049BP, C-MOS (CD4049BE; RCA)
IC5	8-759-984-13	IC MB84013M, C-MOS; FUJITSU
IC6	8-759-045-38	IC MC14538BCP, C-MOS; MOTOROLA
IC7	8-759-240-15	IC TC4015BP, C-MOS (CD4015BE; RCA)
IC8	8-759-240-11	IC TC4011BP, C-MOS (CD4011BE; RCA)
IC9	8-759-240-23	IC TC4023BP, C-MOS (CD4023BE; RCA)
IC10	8-759-045-38	IC MC14538BCP, C-MOS; MOTOROLA
IC11	8-759-045-38	IC MC14538BCP, C-MOS; MOTOROLA
IC12	8-759-990-82	IC TL082CP, TI
IC13	8-759-133-90	IC μPC339C (LM339; NSC)
IC14	8-759-133-90	IC μPC339C (LM339; NSC)
IC15	8-759-240-30	IC TC4030BP, C-MOS (CD4030BE; RCA)

Ref. No.	Part No.	Description
IC16	8-759-240-15	IC TC4015BP, C-MOS (CD4015BE; RCA)
IC17	8-759-240-71	IC TC4071BP, C-MOS (CD4071BE; RCA)
IC18	8-759-045-51	IC MC14551BCP, C-MOS; MOTOROLA
IC19	8-759-990-82	IC TL082CP; TI
IC20	8-759-145-58	IC μPC4558C (RC4558; RAYTHEON)
IC21	8-759-145-58	IC μPC4558C (RC4558; RAYTHEON)
IC22	8-759-990-01	IC VFQ-1C; DATEL
IC23	8-759-921-91	IC TL191CN; TI
IC24	8-759-990-82	IC TL082CP; TI
IC25	8-759-753-31	IC MB7052-R52A, PROM; FUJITSU
IC27	8-759-240-49	IC TC4049BP, C-MOS (CD4049BE; RCA)
IC28	8-759-240-51	IC TC4051BP, C-MOS (CD4051BE; RCA)
IC29	8-759-240-53	IC TC4053BP, C-MOS (CD4053BE; RCA)
IC30	8-759-145-58	IC μPC4558C (RC4558; RAYTHEON)
IC31	8-759-145-58	IC μPC4558C (RC4558; RAYTHEON)
IC32	8-759-145-58	IC μPC4558C (RC4558; RAYTHEON)
IC33	8-759-240-30	IC TC4030BP, C-MOS (CD4030BE; RCA)
IC34	8-759-045-84	IC MC14584BCP, C-MOS; MOTOROLA
IC35	8-759-045-38	IC MC14538BCP, C-MOS; MOTOROLA
IC36	8-759-972-21	IC MM74C221N, C-MOS; NSC
IC37	8-759-240-81	IC TC4081BP, C-MOS (CD4081BE; RCA)
IC38	8-759-240-71	IC TC4071BP, C-MOS (CD4071BE; RCA)
IC39	8-759-240-01	IC TC4001BP, C-MOS (CD4001BE; RCA)
IC40	8-759-990-01	IC VFQ-1C; DATEL
IC41	8-759-921-91	IC TL191CN; TI
IC42	8-759-990-82	IC TL082CP; TI
IC43	8-759-145-58	IC μPC4558C (RC4558; RAYTHEON)
IC44	8-759-145-58	IC μPC4558C (RC4558; RAYTHEON)
IC45	8-759-990-82	IC TL082CP; TI
IC46	8-759-145-58	IC μPC4558C (RC4558; RAYTHEON)
IC47	8-759-921-91	IC TL191CN; TI
IC48	8-759-145-58	IC μPC4558C (RC4558; RAYTHEON)
IC49	8-759-990-82	IC TL082CP; TI

Ref. No.	Part No.	Description
Q1	8-729-663-47	TRANSISTOR 2SC1364
Q2	8-729-663-47	TRANSISTOR 2SC1364
Q3	8-729-663-47	TRANSISTOR 2SC1364
Q4	8-729-663-47	TRANSISTOR 2SC1364
Q5	8-729-612-77	TRANSISTOR 2SA1027R
Q6	8-729-663-47	TRANSISTOR 2SC1364
R1	1-214-156-00	RES, METAL 10K 1% 1/4W
R2	1-214-136-00	RES, METAL 1.5K 1% 1/4W
R3	1-214-156-00	RES, METAL 10K 1% 1/4W
R4	1-214-168-00	RES, METAL 33K 1% 1/4W
R5	1-214-180-00	RES, METAL 100K 1% 1/4W
R6	1-214-180-00	RES, METAL 100K 1% 1/4W
R7	1-214-176-00	RES, METAL 68K 1% 1/4W
R8	1-214-176-00	RES, METAL 68K 1% 1/4W
R9	1-214-108-00	RES, METAL 100 1% 1/4W
R10	1-214-146-00	RES, METAL 3.9K 1% 1/4W
R11	1-214-146-00	RES, METAL 3.9K 1% 1/4W
R12	1-214-128-00	RES, METAL 680 1% 1/4W
R13	1-214-128-00	RES, METAL 680 1% 1/4W
R14	1-214-136-00	RES, METAL 1.5K 1% 1/4W
R15	1-214-180-00	RES, METAL 100K 1% 1/4W
R16	1-214-180-00	RES, METAL 100K 1% 1/4W
R17	1-214-179-00	RES, METAL 91K 1% 1/4W
R18	1-214-180-00	RES, METAL 100K 1% 1/4W
R19	1-214-175-00	RES, METAL 62K 1% 1/4W
R20	1-214-132-00	RES, METAL 1K 1% 1/4W
R21	1-214-180-00	RES, METAL 100K 1% 1/4W
R22	1-214-156-00	RES, METAL 10K 1% 1/4W
R23	1-214-180-00	RES, METAL 100K 1% 1/4W
R24	1-214-142-00	RES, METAL 2.7K 1% 1/4W
R25	1-214-162-00	RES, METAL 22K 1% 1/4W
R26	1-214-180-00	RES, METAL 100K 1% 1/4W
R27	1-214-156-00	RES, METAL 10K 1% 1/4W
R28	1-214-180-00	RES, METAL 100K 1% 1/4W
R29	1-214-165-00	RES, METAL 24K 1% 1/4W
R30	1-214-146-00	RES, METAL 3.9K 1% 1/4W
R31	1-214-148-00	RES, METAL 4.7K 1% 1/4W
R32	1-214-148-00	RES, METAL 4.7K 1% 1/4W
R33	1-214-168-00	RES, METAL 33K 1% 1/4W
R35	1-214-152-00	RES, METAL 6.8K 1% 1/4W
R36	1-214-156-00	RES, METAL 10K 1% 1/4W
R37	1-214-148-00	RES, METAL 4.7K 1% 1/4W
R40	1-214-154-00	RES, METAL 8.2K 1% 1/4W
R41	1-214-154-00	RES, METAL 8.2K 1% 1/4W
R42	1-214-156-00	RES, METAL 10K 1% 1/4W
R43	1-214-180-00	RES, METAL 100K 1% 1/4W
R44	1-214-140-00	RES, METAL 2.2K 1% 1/4W
R45	1-214-140-00	RES, METAL 2.2K 1% 1/4W
R47	1-214-168-00	RES, METAL 33K 1% 1/4W
R48	1-214-168-00	RES, METAL 33K 1% 1/4W

Ref. No.	Part No.	Description
R49	1-214-168-00	RES, METAL 33K 1% 1/4W
R50	1-214-168-00	RES, METAL 33K 1% 1/4W
R51	1-214-149-00	RES, METAL 5.1K 1% 1/4W
R52	1-214-162-00	RES, METAL 18K 1% 1/4W
R53	1-214-164-00	RES, METAL 22K 1% 1/4W
R55	1-214-164-00	RES, METAL 22K 1% 1/4W
R56	1-214-180-00	RES, METAL 100K 1% 1/4W
R57	1-214-180-00	RES, METAL 100K 1% 1/4W
R58	1-214-180-00	RES, METAL 100K 1% 1/4W
R59	1-214-180-00	RES, METAL 100K 1% 1/4W
R60	1-214-176-00	RES, METAL 68K 1% 1/4W
R61	1-214-138-00	RES, METAL 1.8K 1% 1/4W
R62	1-214-179-00	RES, METAL 91K 1% 1/4W
R63	1-214-140-00	RES, METAL 2.2K 1% 1/4W
R65	1-214-180-00	RES, METAL 100K 1% 1/4W
R66	1-214-168-00	RES, METAL 33K 1% 1/4W
R67	1-214-180-00	RES, METAL 100K 1% 1/4W
R68	1-214-156-00	RES, METAL 10K 1% 1/4W
R69	1-214-180-00	RES, METAL 100K 1% 1/4W
R70	1-214-156-00	RES, METAL 10K 1% 1/4W
R71	1-214-164-00	RES, METAL 22K 1% 1/4W
R72	1-214-180-00	RES, METAL 100K 1% 1/4W
R73	1-214-179-00	RES, METAL 91K 1% 1/4W
R74	1-214-140-00	RES, METAL 2.2K 1% 1/4W
R75	1-214-180-00	RES, METAL 100K 1% 1/4W
R76	1-214-132-00	RES, METAL 1K 1% 1/4W
R77	1-214-180-00	RES, METAL 100K 1% 1/4W
R78	1-214-140-00	RES, METAL 2.2K 1% 1/4W
R81	1-214-140-00	RES, METAL 2.2K 1% 1/4W
R82	1-214-171-00	RES, METAL 43K 1% 1/4W
R83	1-214-153-00	RES, METAL 7.5K 1% 1/4W
R84	1-214-162-00	RES, METAL 18K 1% 1/4W
R85	1-214-170-00	RES, METAL 39K 1% 1/4W
R90	1-214-169-00	RES, METAL 36K 1% 1/4W
R91	1-214-169-00	RES, METAL 36K 1% 1/4W
R92	1-214-176-00	RES, METAL 68K 1% 1/4W
R93	1-214-169-00	RES, METAL 36K 1% 1/4W
R94	1-214-169-00	RES, METAL 36K 1% 1/4W
R96	1-214-176-00	RES, METAL 68K 1% 1/4W
R97	1-214-176-00	RES, METAL 68K 1% 1/4W
R98	1-214-160-00	RES, METAL 15K 1% 1/4W
R99	1-214-156-00	RES, METAL 10K 1% 1/4W
R100	1-214-144-00	RES, METAL 3.3K 1% 1/4W
R101	1-214-156-00	RES, METAL 10K 1% 1/4W
R102	1-214-144-00	RES, METAL 3.3K 1% 1/4W
R103	1-214-147-00	RES, METAL 4.3K 1% 1/4W
R104	1-214-147-00	RES, METAL 4.3K 1% 1/4W
R106	1-214-152-00	RES, METAL 6.8K 1% 1/4W

Ref. No.	Part No.	Description
R107	1-214-159-00	RES, METAL 13K 1% 1/4W
R108	1-214-152-00	RES, METAL 6.8K 1% 1/4W
R109	1-214-156-00	RES, METAL 10K 1% 1/4W
R110	1-214-180-00	RES, METAL 100K 1% 1/4W
R111	1-214-156-00	RES, METAL 10K 1% 1/4W
R112	1-214-159-00	RES, METAL 13K 1% 1/4W
R113	1-214-152-00	RES, METAL 6.8K 1% 1/4W
R114	1-214-152-00	RES, METAL 6.8K 1% 1/4W
R115	1-214-164-00	RES, METAL 22K 1% 1/4W
R116	1-214-172-00	RES, METAL 47K 1% 1/4W
R117	1-214-180-00	RES, METAL 100K 1% 1/4W
R118	1-214-156-00	RES, METAL 10K 1% 1/4W
R119	1-214-180-00	RES, METAL 100K 1% 1/4W
R120	1-214-156-00	RES, METAL 10K 1% 1/4W
R121	1-214-179-00	RES, METAL 91K 1% 1/4W
R122	1-214-148-00	RES, METAL 4.7K 1% 1/4W
R123	1-214-175-00	RES, METAL 62K 1% 1/4W
R124	1-214-180-00	RES, METAL 100K 1% 1/4W
R125	1-214-180-00	RES, METAL 100K 1% 1/4W
R126	1-214-156-00	RES, METAL 10K 1% 1/4W
R127	1-214-180-00	RES, METAL 100K 1% 1/4W
R128	1-214-180-00	RES, METAL 100K 1% 1/4W
R129	1-214-180-00	RES, METAL 100K 1% 1/4W
R130	1-214-180-00	RES, METAL 100K 1% 1/4W
R131	1-214-180-00	RES, METAL 100K 1% 1/4W
R132	1-214-180-00	RES, METAL 100K 1% 1/4W
R134	1-214-177-00	RES, METAL 75K 1% 1/4W
R135	1-214-180-00	RES, METAL 100K 1% 1/4W
R137	1-214-156-00	RES, METAL 10K 1% 1/4W
R138	1-214-168-00	RES, METAL 33K 1% 1/4W
R140	1-214-157-00	RES, METAL 11K 1% 1/4W
R141	1-214-162-00	RES, METAL 18K 1% 1/4W
R142	1-214-162-00	RES, METAL 18K 1% 1/4W
R144	1-214-169-00	RES, METAL 36K 1% 1/4W
R145	1-214-162-00	RES, METAL 18K 1% 1/4W
R146	1-214-172-00	RES, METAL 47K 1% 1/4W
R147	1-214-161-00	RES, METAL 16K 1% 1/4W
R148	1-214-180-00	RES, METAL 100K 1% 1/4W
R149	1-214-173-00	RES, METAL 51K 1% 1/4W
R150	1-214-180-00	RES, METAL 100K 1% 1/4W
R152	1-214-180-00	RES, METAL 100K 1% 1/4W
R153	1-214-164-00	RES, METAL 22K 1% 1/4W
R154	1-214-180-00	RES, METAL 100K 1% 1/4W
R155	1-214-170-00	RES, METAL 39K 1% 1/4W
R158	1-214-148-00	RES, METAL 4.7K 1% 1/4W
R159	1-214-132-00	RES, METAL 1K 1% 1/4W
R160	1-214-170-00	RES, METAL 39K 1% 1/4W
R161	1-214-163-00	RES, METAL 20K 1% 1/4W
R162	1-214-178-00	RES, METAL 82K 1% 1/4W
R163	1-214-162-00	RES, METAL 18K 1% 1/4W
R165	1-214-142-00	RES, METAL 2.7K 1% 1/4W

Ref. No.	Part No.	Description
R166	1-214-139-00	RES, METAL 2K 1% 1/4W
R167	1-214-146-00	RES, METAL 3.9K 1% 1/4W
R168	1-214-164-00	RES, METAL 22K 1% 1/4W
R169	1-214-164-00	RES, METAL 22K 1% 1/4W
R170	1-214-140-00	RES, METAL 2.2K 1% 1/4W
R171	1-214-160-00	RES, METAL 15K 1% 1/4W
R172	1-214-152-00	RES, METAL 6.8K 1% 1/4W
R173	1-214-180-00	RES, METAL 100K 1% 1/4W
R174	1-214-176-00	RES, METAL 68K 1% 1/4W
R175	1-214-172-00	RES, METAL 47K 1% 1/4W
R176	1-214-156-00	RES, METAL 10K 1% 1/4W
R177	1-214-180-00	RES, METAL 100K 1% 1/4W
R178	1-214-147-00	RES, METAL 4.3K 1% 1/4W
R179	1-214-156-00	RES, METAL 10K 1% 1/4W
R181	1-214-168-00	RES, METAL 33K 1% 1/4W
R183	1-214-172-00	RES, METAL 47K 1% 1/4W
R184	1-214-176-00	RES, METAL 68K 1% 1/4W
R185	1-214-180-00	RES, METAL 100K 1% 1/4W
R186	1-214-162-00	RES, METAL 18K 1% 1/4W
R187	1-214-128-00	RES, METAL 680 1% 1/4W
R188	1-214-156-00	RES, METAL 10K 1% 1/4W
R189	1-214-180-00	RES, METAL 100K 1% 1/4W
RB1	1-231-525-00	RESISTOR BLOCK, 4.7K x 4
RV1	1-224-937-00	RES, VAR, METAL 1K
RV2	1-224-937-00	RES, VAR, METAL 1K
RV3	1-224-942-00	RES, VAR, METAL 50K
RV4	1-224-938-00	RES, VAR, METAL 2K
RV5	1-224-943-00	RES, VAR, METAL 100K
RV6	1-224-941-00	RES, VAR, METAL 20K
RV7	1-224-943-00	RES, VAR, METAL 100K

REG-1A BOARD

	A-6023-029-A	COMPLETE PCB, REG-1A
C1	1-108-747-00	CAP, MYLAR 0.1 20% 125V
C2	1-108-747-00	CAP, MYLAR 0.1 20% 125V
C3	1-108-747-00	CAP, MYLAR 0.1 20% 125V
CN202	1-560-178-00	PWB RECEPTACLE, 6P
CN203	1-560-177-00	PWB RECEPTACLE, 4P
CN204	1-560-177-00	PWB RECEPTACLE, 4P
CN205	1-508-902-00	TOP TYPE RECEPTACLE, 4P, MALE
CN206	1-508-901-00	TOP TYPE RECEPTACLE, 3P, MALE
CN207	1-560-177-00	PWB RECEPTACLE, 4P
CN208	1-560-178-00	PWB RECEPTACLE, 6P

Ref. No.	Part No.	Description
D1	8-719-127-68	DIODE 1S2768A
D2	8-719-127-68	DIODE 1S2768A
D3	8-719-127-68	DIODE 1S2768A
D4	8-719-127-68	DIODE 1S2768A
D5	8-719-851-51	DIODE S5151
D6	8-719-801-51	DIODE S5151R
D7	8-719-124-07	DIODE RD24E-B
D8	8-719-851-51	DIODE S5151
D9	8-719-801-51	DIODE S5151R
D10	8-719-200-02	DIODE 10E-2
D11	8-719-815-55	DIODE 1S1555
IC1	8-759-374-58	IC HA17458GS (LM1458N; NSC)
⚠R1	1-206-696-00	RES, METAL 22K 5% 2W
R10	1-206-686-00	RES, METAL 8.2K 5% 2W

REG-2 BOARD

	A-6023-023-A	COMPLETE PCB, REG-2
C6	1-131-371-00	CAP, TANTALUM 10 10% 16V
C7	1-102-114-00	CAP, CERAMIC 470PF 10% 50V
C8	1-102-114-00	CAP, CERAMIC 470PF 10% 50V
C9	1-102-114-00	CAP, CERAMIC 470PF 10% 50V
C10	1-161-025-00	CAP, CERAMIC 0.1 10% 25V
C12	1-161-025-00	CAP, CERAMIC 0.1 10% 25V
C14	1-131-371-00	TANTALUM 10 10% 16V
C15	1-102-114-00	CAP, CERAMIC 470PF 10% 50V
C16	1-102-114-00	CAP, CERAMIC 470PF 10% 50V
C18	1-161-025-00	CAP, CERAMIC 0.1 10% 25V
C20	1-161-025-00	CAP, CERAMIC 0.1 10% 25V
C24	1-131-371-00	CAP, TANTALUM 10 10% 16V
C25	1-102-114-00	CAP, CERAMIC 470PF 10% 50V
C26	1-161-025-00	CAP, CERAMIC 0.1 10% 25V
C28	1-101-005-00	CAP, CERAMIC 0.022 50V
C29	1-101-005-00	CAP, CERAMIC 0.022 50V
C30	1-101-005-00	CAP, CERAMIC 0.022 50V
C31	1-101-005-00	CAP, CERAMIC 0.022 50V
C32	1-131-373-00	CAP, TANTALUM 22 10% 16V

Ref. No.	Part No.	Description
CN211	1-508-890-93	PWB RECEPTACLE, 6P
CN212	1-560-175-00	PWB RECEPTACLE, 2P
CN213	1-508-891-00	PWB RECEPTACLE, 3P
CN214	1-508-891-00	PWB RECEPTACLE, 3P
CN215	1-508-890-93	PWB RECEPTACLE, 6P
CN216	1-508-891-00	PWB RECEPTACLE, 3P
CN217	1-508-890-93	PWB RECEPTACLE, 6P
CN218	1-508-845-00	TOP TYPE RECEPTACLE, 6P, MALE
CN219	1-508-744-00	TOP TYPE RECEPTACLE, 10P, MALE
CN220	1-508-744-00	TOP TYPE RECEPTACLE, 10P, MALE
CN221	1-508-744-00	TOP TYPE RECEPTACLE, 10P, MALE
CN222	1-508-901-00	TOP TYPE RECEPTACLE, 3P, MALE
D1	**8-719-200-02**	**DIODE 10E-2**
D2	**8-719-200-02**	**DIODE 10E-2**
D3	**8-719-200-02**	**DIODE 10E-2**
D4	**8-719-200-02**	**DIODE 10E-2**
D5	**8-719-200-02**	**DIODE 10E-2**
D6	**8-719-191-07**	**DIODE RD9.1E-B**
D7	**8-719-162-07**	**DIODE RD6.2E-B**
D8	**8-719-162-07**	**DIODE RD6.2E-B**
D9	**8-719-191-07**	**DIODE RD9.1E-B**
D10	**8-719-191-07**	**DIODE RD9.1E-B**
D11	**8-719-151-07**	**DIODE RD5.1E-B**
D12	**8-719-182-07**	**DIODE RD8.2E**
IC1	**8-759-377-23**	**IC HA17723G (μA723DC; FSC)**
IC2	**8-759-377-42**	**IC HA17741G (μA741DC; FSC)**
IC3	**8-759-377-23**	**IC HA17723G (μA723DC; FSC)**
IC4	**8-759-377-42**	**IC HA17741G (μA741DC; FSC)**
IC5	**8-759-377-23**	**IC HA17723G (μA723DC; FSC)**
Q1	**8-762-110-00**	**TRANSISTOR 2SC1670**
Q2	**8-729-663-47**	**TRANSISTOR 2SC1364**
Q3	**8-729-612-77**	**TRANSISTOR 2SA1027R**
Q4	**8-762-210-00**	**TRANSISTOR 2SA840**
Q5	**8-762-110-00**	**TRANSISTOR 2SC1670**
Q6	**8-729-612-77**	**TRANSISTOR 2SA1027R**
Q7	**8-762-210-00**	**TRANSISTOR 2SA840**
Q8	**8-729-663-47**	**TRANSISTOR 2SC1364**
Q9	**8-729-663-47**	**TRANSISTOR 2SC1364**
Q10	**8-729-663-47**	**TRANSISTOR 2SC1364**
Q11	**8-729-663-47**	**TRANSISTOR 2SC1364**
Q12	**8-762-110-00**	**TRANSISTOR 2SC1670**
Q13	**8-762-110-00**	**TRANSISTOR 2SC1670**
Q14	**8-762-110-00**	**TRANSISTOR 2SC1670**
Q15	**8-762-110-00**	**TRANSISTOR 2SC1670**
Q16	**8-760-413-10**	**TRANSISTOR 2SC1475**
Q17	**8-729-663-47**	**TRANSISTOR 2SC1364**

Ref. No.	Part No.	Description
R1	**1-224-869-00**	**RES, CARBON 680 5% 1/2W**
R2	**1-244-872-00**	**RES, CARBON 910 5% 1/2W**
⚠ **R8**	**1-217-193-00**	**RES, WIRE 0.27 10% 2W**
R12	**1-217-193-00**	**RES, WIRE 0.27 10% 2W**
R14	**1-224-946-00**	**RES, VAR, METAL 500**
R17	**1-224-946-00**	**RES, VAR, METAL 500**
⚠ **R22**	**1-217-192-00**	**RES, WIRE 0.22 10% 2W**
R26	**1-217-191-00**	**RES, WIRE 0.18 10% 2W**
R27	**1-217-228-00**	**RES, WIRE 220 10% 2W**
R29	**1-224-946-00**	**RES, VAR, METAL 500**
R32	**1-224-946-00**	**RES, VAR, METAL 500**
⚠ **R34**	**1-217-228-00**	**RES, WIRE 220 10% 2W**
R48	**1-224-946-00**	**RES, VAR, METAL 500**
⚠ **R52**	**1-217-190-00**	**RES, WIRE 0.15 10% 2W**
R53	**1-217-192-00**	**RES, WIRE 0.22 10% 2W**
R56	**1-217-192-00**	**RES, WIRE 0.22 10% 2W**
R60	**1-206-648-00**	**RES, METAL 220 5% 2W**

REG-3A BOARD

⚠ A-6023-026-A	COMPLETE PCB, REG-3A (NTSC, PM)
A-6023-027-A	COMPLETE PCB, REG-3A (J)
A-6023-028-A	COMPLETE PCB, REG-3A (PS)

C1	**1-121-999-00**	**CAP, ELECT 10 160V**
C2	**1-119-305-00**	**CAP, ELECT 47 160V**
C5	**1-131-371-00**	**CAP, TANTALUM 10 10% 16V**
C6	**1-102-114-00**	**CAP, CERAMIC 470PF 10% 50V**
C7	**1-161-772-00**	**CAP, CERAMIC 0.1 10% 25V**
C10	**1-131-371-00**	**CAP, TANTALUM 10 10% 16V**
C11	**1-102-114-00**	**CAP, CERAMIC 470PF 10% 50V**
C12	**1-161-772-00**	**CAP, CERAMIC 0.1 10% 25V**
C14	**1-101-005-00**	**CAP, CERAMIC 0.022 50V**
C15	**1-101-005-00**	**CAP, CERAMIC 0.022 50V**
CN231	1-508-706-00	TOP TYPE RECEPTACLE, 2P, MALE
CN232	1-508-706-00	TOP TYPE RECEPTACLE, 2P, MALE
CN233	1-560-178-00	PWB RECEPTACLE, 6P
CN234	1-508-889-00	PWB RECEPTACLE, 9P
CN235	1-508-891-00	PWB RECEPTACLE, 3P
CN236	1-508-889-00	PWB RECEPTACLE, 9P
CN237	1-508-710-00	TOP TYPE RECEPTACLE, 6P, MALE
CN238	1-508-845-00	TOP TYPE RECEPTACLE, 6P, MALE
CN239	1-508-845-00	TOP TYPE RECEPTACLE, 6P, MALE

Ref. No.	Part No.	Description
D1	8-719-200-02	DIODE 10E-2
D2	8-719-191-07	DIODE RD9.1E-B
D3	8-719-191-07	DIODE RD9.1E-B
D4	8-719-191-07	DIODE RD9.1E-B
D5	8-719-200-02	DIODE 10E-2
D6	8-719-200-02	DIODE 10E-2
⚠F1	1-532-578-00	FUSE, 2A/250V (U/C, PM)
F1	1-532-455-XX	FUSE, 2A/250V (JAPAN)
F1	1-532-203-00	FUSE, T 2A/250V (PS)
IC1	8-759-377-23	IC HA17723G (μA723DC; FSC)
IC2	8-759-377-23	IC HA17723G (μA723DC; FSC)
Q1	8-765-170-01	TRANSISTOR 2SC1962
Q2	8-765-170-01	TRANSISTOR 2SC1962
Q3	8-765-170-01	TRANSISTOR 2SC1962
Q4	8-762-110-00	TRANSISTOR 2SC1670
Q5	8-762-110-00	TRANSISTOR 2SC1670
Q6	8-762-110-00	TRANSISTOR 2SC1670
Q7	8-762-210-00	TRANSISTOR 2SA840
Q9	8-762-110-00	TRANSISTOR 2SC1670
Q10	8-762-110-00	TRANSISTOR 2SC1670
⚠R2	1-206-680-00	RES, METAL 4.7K 5% 2W
R3	1-206-680-00	RES, METAL 4.7K 5% 2W
R13	1-217-200-00	RES, WIRE 1 10% 2W
R15	1-217-200-00	RES, WIRE 1 10% 2W
R17	1-217-200-00	RES, WIRE 1 10% 2W
R20	1-224-949-00	RES, VAR, METAL 5K
⚠R25	1-217-192-00	RES, WIRE 0.22 10% 2W
R27	1-224-946-00	RES, VAR, METAL 500
R36	1-224-946-00	RES, VAR, METAL 500
⚠R41	1-217-190-00	RES, WIRE 0.15 10% 2W
R42	1-217-190-00	RES, WIRE 0.15 10% 2W
R43	1-217-190-00	RES, WIRE 0.15 10% 2W

Ref. No.	Part No.	Description
REG-4 BOARD		
	A-6023-024-B	COMPLETE PCB, REG-4
C1	1-119-398-00	CAP, ELECT 10 350V
C2	1-119-398-00	CAP, ELECT 10 350V
CN251	1-508-935-00	SIDE TYPE RECEPTACLE, 5P, MALE
CN252	1-508-951-00	SIDE TYPE RECEPTACLE, 10P, MALE
D1	8-719-900-95	DIODE V09G
D2	8-719-900-95	DIODE V09G
D3	8-719-900-95	DIODE V09G
D4	8-719-900-95	DIODE V09G
D5	8-719-900-95	DIODE V09G
D6	8-719-900-95	DIODE V09G
D7	8-719-110-00	DIODE RD100E-ZS
D8	8-719-109-07	DIODE RD39E-C
D9	8-719-109-07	DIODE RD39E-C
D10	8-719-109-07	DIODE RD39E-C
D11	8-719-109-07	DIODE RD39E-C
D12	8-719-110-00	DIODE RD100E-ZS
D13	8-719-124-07	DIODE RD24E-B
D14	8-719-124-07	DIODE RD24E-B
Q1	8-763-420-00	TRANSISTOR 2SC1762
Q2	8-729-663-47	TRANSISTOR 2SC1364
Q3	8-765-141-00	TRANSISTOR 2SA911
Q4	8-729-384-48	TRANSISTOR 2SA844
Q5	8-763-420-00	TRANSISTOR 2SC1762
Q6	8-729-663-47	TRANSISTOR 2SC1364
Q7	8-765-141-00	TRANSISTOR 2SA911
Q8	8-729-384-48	TRANSISTOR 2SA844
⚠R3	1-206-700-00	RES, METAL 33K 5% 2W
R8	1-206-700-00	RES, METAL 33K 5% 2W

RF EQ-1 BOARD

Ref. No.	Part No.	Description
	A-6011-044-A	COMPLETE PCB, RF EQ-1 (NTSC, PM)
	A-6011-055-A	COMPLETE PCB, RF EQ-1 (PS)
C1 ~ 37	1-101-005-00	CAP, CERAMIC 0.022 50V
C39	1-101-005-00	CAP, CERAMIC 0.022 50V
C41	1-101-005-00	CAP, CERAMIC 0.022 50V
C43	1-107-080-00	CAP, MICA 62PF 5% 50V
C44	1-101-005-00	CAP, CERAMIC 0.022 50V
D1	8-719-815-55	DIODE 1S1555
D2	8-719-815-55	DIODE 1S1555
D3	8-719-815-55	DIODE 1S1555
D4	8-719-815-55	DIODE 1S1555
D5	8-719-815-55	DIODE 1S1555
D6	8-719-815-55	DIODE 1S1555
D7	8-719-815-55	DIODE 1S1555
D8	8-719-815-55	DIODE 1S1555
DL1	1-415-105-00	DELAY LINE, 32nS
DL2	1-415-105-00	DELAY LINE, 32nS
IC1	8-759-275-14	IC TA7504M-R (μA741HC; FSC)
L1	1-407-179-00	INDUCTOR MICRO 1.2mH
L2	1-407-564-00	COIL, VAR 1.5mH
LPF1	1-231-560-00	FILTER, LOWPASS 15MHz
Q1	8-724-375-01	TRANSISTOR 2SC403C
Q2	8-724-375-01	TRANSISTOR 2SC403C
Q3	8-729-353-00	TRANSISTOR 2SA530H
Q4	8-724-375-01	TRANSISTOR 2SC403C
Q5	8-729-203-52	TRANSISTOR 3SK35GR
Q6	8-729-203-52	TRANSISTOR 3SK35GR
Q7	8-724-375-01	TRANSISTOR 2SC403C
Q8	8-724-375-01	TRANSISTOR 2SC403C
Q9	8-724-375-01	TRANSISTOR 2SC403C
Q10	8-724-375-01	TRANSISTOR 2SC403C
Q11	8-724-375-01	TRANSISTOR 2SC403C
Q12	8-729-353-00	TRANSISTOR 2SA530H
Q13	8-724-375-01	TRANSISTOR 2SC403C
Q14	8-724-375-01	TRANSISTOR 2SC403C
Q15	8-724-375-01	TRANSISTOR 2SC403C
Q16	8-724-375-01	TRANSISTOR 2SC403C
Q17	8-724-375-01	TRANSISTOR 2SC403C
Q18	8-724-375-01	TRANSISTOR 2SC403C
Q19	8-729-353-00	TRANSISTOR 2SA530H
Q20	8-724-375-01	TRANSISTOR 2SC403C
Q21	8-725-800-00	TRANSISTOR 2SC1128
Q22	8-725-800-00	TRANSISTOR 2SC1128
Q23	8-724-375-01	TRANSISTOR 2SC403C
Q24	8-724-375-01	TRANSISTOR 2SC403C
Q25	8-729-353-00	TRANSISTOR 2SA530H
R2	1-214-088-00	RES, METAL 15 1% 1/4W
R3	1-214-120-00	RES, METAL 330 1% 1/4W
R4	1-214-140-00	RES, METAL 2.2K 1% 1/4W
R5	1-214-136-00	RES, METAL 1.5K 1% 1/4W
R6	1-214-084-00	RES, METAL 10 1% 1/4W
R7	1-214-084-00	RES, METAL 10 1% 1/4W
R8	1-214-108-00	RES, METAL 100 1% 1/4W
R9	1-214-108-00	RES, METAL 100 1% 1/4W
R10	1-214-125-00	RES, METAL 510 1% 1/4W
R11	1-224-936-00	RES, VAR, METAL 500
R12	1-214-140-00	RES, METAL 2.2K 1% 1/4W
R13	1-214-156-00	RES, METAL 10K 1% 1/4W
R14	1-214-180-00	RES, METAL 100K 1% 1/4W
R15	1-214-180-00	RES, METAL 100K 1% 1/4W
R17	1-214-180-00	RES, METAL 100K 1% 1/4W
R18	1-214-156-00	RES, METAL 10K 1% 1/4W
R19	1-214-108-00	RES, METAL 100 1% 1/4W
R20	1-214-130-00	RES, METAL 820 1% 1/4W
R21	1-214-108-00	RES, METAL 100 1% 1/4W
R22	1-214-124-00	RES, METAL 470 1% 1/4W
R23	1-214-108-00	RES, METAL 100 1% 1/4W
R24	1-214-130-00	RES, METAL 820 1% 1/4W
R25	1-214-108-00	RES, METAL 100 1% 1/4W
R26	1-214-142-00	RES, METAL 2.7K 1% 1/4W
R27	1-214-132-00	RES, METAL 1K 1% 1/4W
R28	1-214-152-00	RES, METAL 6.8K 1% 1/4W
R29	1-214-171-00	RES, METAL 43K 1% 1/4W
R30	1-214-136-00	RES, METAL 1.5K 1% 1/4W
R31	1-214-108-00	RES, METAL 100 1% 1/4W
R32	1-214-084-00	RES, METAL 10 1% 1/4W
R33	1-214-084-00	RES, METAL 10 1% 1/4W
R34	1-214-108-00	RES, METAL 100 1% 1/4W
R35	1-214-125-00	RES, METAL 510 1% 1/4W
R36	1-224-936-00	RES, VAR, METAL 500
R37	1-214-140-00	RES, METAL 2.2K 1% 1/4W
R38	1-214-125-00	RES, METAL 510 1% 1/4W
R39	1-224-938-00	RES, VAR, METAL 2K
R40	1-214-156-00	RES, METAL 10K 1% 1/4W
R41	1-214-108-00	RES, METAL 100 1% 1/4W
R42	1-214-124-00	RES, METAL 470 1% 1/4W

Ref. No.	Part No.	Description
R43	1-214-118-00	RES, METAL 270 1% 1/4W
R44	1-214-118-00	RES, METAL 270 1% 1/4W
R45	1-214-130-00	RES, METAL 820 1% 1/4W
R46	1-214-130-00	RES, METAL 820 1% 1/4W
R47	1-214-108-00	RES, METAL 100 1% 1/4W
R48	1-214-142-00	RES, METAL 2.7K 1% 1/4W
R49	1-214-132-00	RES, METAL 1K 1% 1/4W
R50	1-214-152-00	RES, METAL 6.8K 1% 1/4W
R51	1-214-171-00	RES, METAL 43K 1% 1/4W
R52	1-214-136-00	RES, METAL 1.5K 1% 1/4W
R53	1-214-108-00	RES, METAL 100 1% 1/4W
R54	1-214-084-00	RES, METAL 10 1% 1/4W
R55	1-214-084-00	RES, METAL 10 1% 1/4W
R56	1-214-108-00	RES, METAL 100 1% 1/4W
R57	1-214-104-00	RES, METAL 68 1% 1/4W
R58	1-214-119-00	RES, METAL 300 1% 1/4W
R59	1-224-944-00	RES, VAR, METAL 100
R60	1-214-140-00	RES, METAL 2.2K 1% 1/4W
R61	1-214-125-00	RES, METAL 510 1% 1/4W
R62	1-214-140-00	RES, METAL 2.2K 1% 1/4W
R63	1-214-130-00	RES, METAL 820 1% 1/4W
R64	1-214-094-00	RES, METAL 27 1% 1/4W (NTSC, PM)
R64	1-214-099-00	RES, METAL 43 1% 1/4W (PS)
R65	1-214-108-00	RES, METAL 100 1% 1/4W
R66	1-214-140-00	RES, METAL 2.2K 1% 1/4W
R67	1-214-130-00	RES, METAL 820 1% 1/4W
R68	1-214-108-00	RES, METAL 100 1% 1/4W
R69	1-214-152-00	RES, METAL 6.8K 1% 1/4W
R70	1-214-171-00	RES, METAL 43K 1% 1/4W
R71	1-214-136-00	RES, METAL 1.5K 1% 1/4W
R72	1-214-108-00	RES, METAL 100 1% 1/4W
R73	1-214-084-00	RES, METAL 10 1% 1/4W
R74	1-214-084-00	RES, METAL 10 1% 1/4W
R75	1-214-108-00	RES, METAL 100 1% 1/4W
R76	1-214-104-00	RES, METAL 68 1% 1/4W
R77	1-214-104-00	RES, METAL 68 1% 1/4W
R78	1-214-156-00	RES, METAL 10K 1% 1/4W
R79	1-214-132-00	RES, METAL 1K 1% 1/4W
R80	1-214-132-00	RES, METAL 1K 1% 1/4W
R81	1-214-097-00	RES, METAL 36 1% 1/4W
R82	1-214-125-00	RES, METAL 510 1% 1/4W
R83	1-214-125-00	RES, METAL 510 1% 1/4W
R84	1-214-113-00	RES, METAL 160 1% 1/4W

RF EQ-2 BOARD

Ref. No.	Part No.	Description
	A-6011-045-B	COMPLETE PCB, RF EQ-2
C1	1-101-005-00	CAP, CERAMIC 0.022 50V
C2	1-101-005-00	CAP, CERAMIC 0.022 50V
C3	1-101-005-00	CAP, CERAMIC 0.022 50V
C4	1-101-005-00	CAP, CERAMIC 0.022 50V
C5	1-101-005-00	CAP, CERAMIC 0.022 50V
C6	1-101-005-00	CAP, CERAMIC 0.022 50V
C7	1-101-005-00	CAP, CERAMIC 0.022 50V
C8	1-107-065-00	CAP, MICA 15PF 5% 50V
C8	1-107-075-00	CAP, MICA 39PF 5% 50V
C9	1-101-005-00	CAP, CERAMIC 0.022 50V
C10	1-107-086-00	CAP, MICA 110PF 5% 50V
C11	1-101-005-00	CAP, CERAMIC 0.022 50V
C13	1-101-005-00	CAP, CERAMIC 0.022 50V
C15	1-101-005-00	CAP, CERAMIC 0.022 50V
C16	1-101-005-00	CAP, CERAMIC 0.022 50V
C17	1-107-073-00	CAP, MICA 33PF 5% 50V
C18	1-107-093-00	CAP, MICA 220PF 5% 50V
C19	1-101-005-00	CAP, CERAMIC 0.022 50V
C22	1-101-005-00	CAP, CERAMIC 0.022 50V
C23	1-131-379-00	CAP, TANTALUM 22 10% 10V
C24	1-131-407-00	CAP, TANTALUM 0.68 10% 35V
C26	1-131-402-00	CAP, TANTALUM 0.1 10% 35V
C27	1-101-005-00	CAP, CERAMIC 0.022 50V
C28	1-101-005-00	CAP, CERAMIC 0.022 50V
C29	1-101-005-00	CAP, CERAMIC 0.022 50V
C30	1-101-005-00	CAP, CERAMIC 0.022 50V
C31	1-101-005-00	CAP, CERAMIC 0.022 50V
C32	1-101-005-00	CAP, CERAMIC 0.022 50V
C33	1-101-005-00	CAP, CERAMIC 0.022 50V
C34	1-101-005-00	CAP, CERAMIC 0.022 50V
C35	1-101-005-00	CAP, CERAMIC 0.022 50V
C36	1-107-092-00	CAP, MICA 200PF 5% 50V
C37	1-101-005-00	CAP, CERAMIC 0.022 50V
C38	1-131-352-00	CAP, TANTALUM 6.8 10% 35V
C39	1-101-005-00	CAP, CERAMIC 0.022 50V
C40	1-131-405-00	CAP, TANTALUM 0.33 10% 35V
C41	1-131-371-00	CAP, TANTALUM 10 10% 16V
C42	1-101-005-00	CAP, CERAMIC 0.022 50V
C44	1-101-005-00	CAP, CERAMIC 0.022 50V
C46	1-101-005-00	CAP, CERAMIC 0.022 50V
C48	1-101-005-00	CAP, CERAMIC 0.022 50V
C50	1-131-351-00	CAP, TANTALUM 4.7 10% 35V
C51	1-101-005-00	CAP, CERAMIC 0.022 50V
C53	1-101-005-00	CAP, CERAMIC 0.022 50V
D1	8-719-815-55	DIODE 1S1555
D2	8-719-815-55	DIODE 1S1555
D3	8-719-162-07	DIODE RD6.2E-B
D4	8-719-815-55	DIODE 1S1555
D5	8-719-815-55	DIODE 1S1555

Ref. No.	Part No.	Description
D6	8-719-815-55	DIODE 1S1555
D7	8-719-700-25	DIODE 1S1925PS
D8	8-719-700-25	DIODE 1S1925PS
D9	8-719-815-55	DIODE 1S1555
IC1	8-759-100-71	IC μPC71A (μA710HC; FSC)
IC2	8-759-941-23	IC SN74123N, TTL; TI
IC3	8-759-974-02	IC SN7402N, TTL; TI
IC4	8-759-942-21	IC SN74221N, TTL; TI
IC5	8-759-974-86	IC SN7486N, TTL; TI
IC6	8-759-354-53	IC HD75453P (SN75453BP; TI)
IC7	8-759-100-71	IC μPC71A (μA710HC; FSC)
IC8	8-759-100-71	IC μPC71A (μA710HC; FSC)
IC9	8-759-941-23	IC SN74123N, TTL; TI
IC10	8-759-632-00	IC M53200P, TTL (SN7400N; TI)
L1	1-407-188-XX	INDUCTOR MICRO 6.8
Q1	8-724-375-01	TRANSISTOR 2SC403C
Q2	8-724-375-01	TRANSISTOR 2SC403C
Q3	8-729-353-00	TRANSISTOR 2SA530H
Q4	8-725-800-00	TRANSISTOR 2SC1128
Q5	8-724-375-01	TRANSISTOR 2SC403C
Q6	8-729-353-00	TRANSISTOR 2SA530H
Q7	8-729-612-77	TRANSISTOR 2SA1027R
Q8	8-724-375-01	TRANSISTOR 2SC403C
Q9	8-725-800-00	TRANSISTOR 2SC1128
Q10	8-724-375-01	TRANSISTOR 2SC403C
Q11	8-724-375-01	TRANSISTOR 2SC403C
Q12	8-729-353-00	TRANSISTOR 2SA530H
Q13	8-725-800-00	TRANSISTOR 2SC1128
Q14	8-724-375-01	TRANSISTOR 2SC403C
Q15	8-761-622-00	TRANSISTOR 2SC1636
Q16	8-723-302-00	TRANSISTOR 2SK43-2
Q17	8-729-663-47	TRANSISTOR 2SC1364
Q18	8-729-663-47	TRANSISTOR 2SC1364
Q19	8-723-302-00	TRANSISTOR 2SK43-2
Q20	8-725-800-00	TRANSISTOR 2SC1128
R14	1-224-946-00	RES, VAR, METAL 500
R40	1-224-945-00	RES, VAR, METAL 200
R51	1-224-935-00	RES, VAR, METAL 200
R71	1-224-936-00	RES, VAR, METAL 500
R75	1-224-940-00	RES, VAR, METAL 10K
SW1	1-552-101-00	SWITCH, SLIDE

RF SW BOARD

Ref. No.	Part No.	Description
	A-6011-042-A	COMPLETE PCB, RF SW (NTSC, PM)
	A-6011-056-A	COMPLETE PCB, RF SW (PS)
C1	1-101-005-00	CAP, CERAMIC 0.022 50V
C2	1-101-005-00	CAP, CERAMIC 0.022 50V
C3	1-107-072-00	CAP, MICA 30PF 5% 50V (NTSC, PM)
C3	1-107-079-00	CAP, MICA 56PF 5% 50V (PS)
C4	1-101-005-00	CAP, CERAMIC 0.022 50V
C5	1-101-005-00	CAP, CERAMIC 0.022 50V
C6	1-101-005-00	CAP, CERAMIC 0.022 50V
C7	1-101-005-00	CAP, CERAMIC 0.022 50V
C8	1-101-005-00	CAP, CERAMIC 0.022 50V
C9	1-101-005-00	CAP, CERAMIC 0.022 50V
C10	1-101-005-00	CAP, CERAMIC 0.022 50V
C11	1-101-005-00	CAP, CERAMIC 0.022 50V
C12	1-101-005-00	CAP, CERAMIC 0.022 50V
C13	1-101-005-00	CAP, CERAMIC 0.022 50V
C14	1-101-005-00	CAP, CERAMIC 0.022 50V
C15	1-101-005-00	CAP, CERAMIC 0.022 50V
C16	1-101-005-00	CAP, CERAMIC 0.022 50V
C17	1-107-083-00	CAP, MICA 82PF 5% 50V (NTSC, PM)
C17	1-107-085-00	CAP, MICA 100PF 5% 50V (PS)
C18	1-101-005-00	CAP, CERAMIC 0.022 50V
C19	1-101-005-00	CAP, CERAMIC 0.022 50V
C20	1-101-005-00	CAP, CERAMIC 0.022 50V
C21	1-101-005-00	CAP, CERAMIC 0.022 50V
C22	1-101-005-00	CAP, CERAMIC 0.022 50V
C23	1-101-005-00	CAP, CERAMIC 0.022 50V
C24	1-101-005-00	CAP, CERAMIC 0.022 50V
C25	1-101-005-00	CAP, CERAMIC 0.022 50V
C26	1-107-072-00	CAP, MICA 30PF 5% 50V (NTSC, PM)
C26	1-107-079-00	CAP, MICA 56PF 5% 50V (PS)
C27	1-101-005-00	CAP, CERAMIC 0.022 50V
C28	1-101-005-00	CAP, CERAMIC 0.022 50V
C29	1-101-005-00	CAP, CERAMIC 0.022 50V
C30	1-101-005-00	CAP, CERAMIC 0.022 50V
C31	1-101-005-00	CAP, CERAMIC 0.022 50V
C32	1-131-373-00	CAP, TANTALUM 22 10% 16V
C33	1-131-373-00	CAP, TANTALUM 22 10% 16V
C34	1-101-005-00	CAP, CERAMIC 0.022 50V
C35	1-101-005-00	CAP, CERAMIC 0.022 50V
C36	1-131-387-00	CAP, TANTALUM 47 10% 6.3V
C39	1-101-005-00	CAP, CERAMIC 0.022 50V

Ref. No.	Part No.	Description
C40	1-101-005-00	CAP, CERAMIC 0.022 50V
C41	1-101-005-00	CAP, CERAMIC 0.022 50V
C45	1-101-005-00	CAP, CERAMIC 0.022 50V
C46	1-101-005-00	CAP, CERAMIC 0.022 50V
C47	1-101-005-00	CAP, CERAMIC 0.022 50V
C48	1-101-005-00	CAP, CERAMIC 0.022 50V
C50	1-131-352-00	CAP, TANTALUM 6.8 10% 35V
CN310	1-561-365-00	COAXIAL CONNECTOR, MALE
CN311	1-508-845-00	TOP TYPE RECEPTACLE, 6P, MALE
CN312	1-508-904-00	TOP TYPE RECEPTACLE, 6P, MALE
CN313	1-508-904-00	TOP TYPE RECEPTACLE, 6P, MALE
CN314	1-508-901-00	TOP TYPE RECEPTACLE, 6P, MALE
CN315	1-508-903-00	TOP TYPE RECEPTACLE, 6P, MALE
CN316	1-508-949-00	TOP TYPE RECEPTACLE, 12P, MALE
D1	8-719-815-55	DIODE 1S1555
D2	8-719-815-55	DIODE 1S1555
D3	8-719-815-55	DIODE 1S1555
D4	8-719-709-25	DIODE 1S1925P
IC1	8-759-014-45	IC MC1445G; MOTOROLA
IC2	8-759-014-45	IC MC1445G; MOTOROLA
IC3	8-759-930-54	IC CA3054; RCA
IC4	8-759-014-45	IC MC1445G; MOTOROLA
IC5	8-759-942-65	IC SN74265N, TTL; TI
IC6	8-759-906-07	IC TL607CP; TI
IC7	8-759-906-07	IC TL607CP; TI
IC8	8-759-906-07	IC TL607CP; TI
IC9	8-759-374-58	IC HA17458GS (LM1458N; NSC)
L1	1-407-186-XX	INDUCTOR MICRO 4.7 (NTSC, PM)
L1	1-407-188-XX	INDUCTOR MICRO 6.8 (PS)
L2	1-407-183-XX	INDUCTOR MICRO 2.7
L3	1-407-186-XX	INDUCTOR MICRO 4.7 (NTSC, PM)
L3	1-407-188-XX	INDUCTOR MICRO 6.8 (PS)
Q1	8-729-023-69	TRANSISTOR 2N2369A
Q2	8-724-375-01	TRANSISTOR 2SC403C
Q3	8-729-023-69	TRANSISTOR 2N2369A
Q4	8-729-023-69	TRANSISTOR 2N2369A
Q5	8-724-375-01	TRANSISTOR 2SC403C
Q6	8-724-375-01	TRANSISTOR 2SC403C

Ref. No.	Part No.	Description
R1	1-224-934-00	RES, VAR, METAL 100
R2	1-214-122-00	RES, METAL 390 1% 1/4W
R3	1-224-935-00	RES, VAR, METAL 200
R4	1-214-101-00	RES, METAL 51 1% 1/4W
R5	1-214-116-00	RES, METAL 220 1% 1/4W
R6	1-214-116-00	RES, METAL 220 1% 1/4W
R7	1-214-119-00	RES, METAL 300 1% 1/4W
R8	1-226-558-00	RES, VAR 500
R9	1-214-120-00	RES, METAL 330 1% 1/4W
R10	1-214-156-00	RES, METAL 10K 1% 1/4W
R11	1-214-140-00	RES, METAL 2.2K 1% 1/4W
R12	1-214-115-00	RES, METAL 200 1% 1/4W
R13	1-214-115-00	RES, METAL 200 1% 1/4W
R14	1-214-122-00	RES, METAL 390 1% 1/4W
R15	1-214-160-00	RES, METAL 15K 1% 1/4W
R16	1-224-935-00	RES, VAR, METAL 200
R17	1-214-122-00	RES, METAL 390 1% 1/4W
R18	1-214-116-00	RES, METAL 220 1% 1/4W
R19	1-214-116-00	RES, METAL 220 1% 1/4W
R20	1-224-936-00	RES, VAR, METAL 500
R21	1-214-108-00	RES, METAL 100 1% 1/4W
R22	1-214-140-00	RES, METAL 2.2K 1% 1/4W
R23	1-214-108-00	RES, METAL 100 1% 1/4W
R24	1-214-150-00	RES, METAL 5.6K 1% 1/4W
R25	1-214-130-00	RES, METAL 820 1% 1/4W
R26	1-214-132-00	RES, METAL 1K 1% 1/4W
R27	1-214-104-00	RES, METAL 68 1% 1/4W
R28	1-214-149-00	RES, METAL 5.1K 1% 1/4W
R29	1-214-120-00	RES, METAL 330 1% 1/4W
R30	1-214-127-00	RES, METAL 620 1% 1/4W
R31	1-214-127-00	RES, METAL 620 1% 1/4W
R32	1-214-127-00	RES, METAL 620 1% 1/4W
R33	1-214-132-00	RES, METAL 1K 1% 1/4W
R34	1-214-108-00	RES, METAL 100 1% 1/4W
R36	1-214-149-00	RES, METAL 5.1K 1% 1/4W
R37	1-214-135-00	RES, METAL 1.3K 1% 1/4W
R38	1-214-100-00	RES, METAL 47 1% 1/4W
R39	1-224-934-00	RES, VAR, METAL 100
R40	1-214-122-00	RES, METAL 390 1% 1/4W
R41	1-224-935-00	RES, VAR, METAL 200
R42	1-214-101-00	RES, METAL 51 1% 1/4W
R43	1-214-116-00	RES, METAL 220 1% 1/4W
R44	1-214-116-00	RES, METAL 220 1% 1/4W
R45	1-214-119-00	RES, METAL 300 1% 1/4W
R46	1-226-558-00	RES, VAR 500
R47	1-214-120-00	RES, METAL 330 1% 1/4W
R48	1-214-156-00	RES, METAL 10K 1% 1/4W
R49	1-214-140-00	RES, METAL 2.2K 1% 1/4W
R50	1-214-116-00	RES, METAL 220 1% 1/4W
R51	1-226-559-00	RES, VAR 50K

Ref. No.	Part No.	Description
R52	1-226-559-00	RES, VAR 50K
R53	1-214-132-00	RES, METAL 1K 1% 1/4W
R54	1-214-108-00	RES, METAL 100 1% 1/4W
R55	1-214-108-00	RES, METAL 100 1% 1/4W
R56	1-214-132-00	RES, METAL 1K 1% 1/4W
R57	1-214-156-00	RES, METAL 10K 1% 1/4W
R58	1-214-150-00	RES, METAL 5.6K 1% 1/4W
R59	1-214-159-00	RES, METAL 13K 1% 1/4W
R60	1-214-148-00	RES, METAL 4700 1% 1/4W
R61	1-214-108-00	RES, METAL 100 1% 1/4W
R62	1-214-108-00	RES, METAL 100 1% 1/4W
R63	1-214-108-00	RES, METAL 100 1% 1/4W
R64	1-214-108-00	RES, METAL 100 1% 1/4W
R65	1-214-108-00	RES, METAL 100 1% 1/4W
R66	1-214-108-00	RES, METAL 100 1% 1/4W
R67	1-214-108-00	RES, METAL 100 1% 1/4W
R68	1-214-108-00	RES, METAL 100 1% 1/4W
R69	1-214-108-00	RES, METAL 100 1% 1/4W
R74	1-214-140-00	RES, METAL 2.2K 1% 1/4W
R75	1-214-140-00	RES, METAL 2.2K 1% 1/4W
R76	1-214-122-00	RES, METAL 390 1% 1/4W
R77	1-214-122-00	RES, METAL 390 1% 1/4W
R78	1-214-108-00	RES, METAL 100 1% 1/4W
R79	1-214-130-00	RES, METAL 820 1% 1/4W
R81	1-214-144-00	RES, METAL 3300 1% 1/4W
RY1	1-515-309-21	RELAY, 12V/1kΩ

RPH-1 BOARD (except PS-A4)

	A-588-947-00	PC BOARD, RPH-1
C1	1-109-661-00	CAP, MICA 33PF
CHOICE	1-109-663-00	CAP, MICA 39PF
	1-109-665-00	CAP, MICA 47PF
	1-109-667-00	CAP, MICA 56PF
	1-109-669-00	CAP, MICA 68PF
	1-109-671-00	CAP, MICA 82PF
H1	8-825-737-00	HEAD, AUDIO/CTL R/P

Ref. No.	Part No.	Description

RPH-2 BOARD (For PS-A4)

	1-588-948-00	PC BOARD, RPH-2
C1	1-109-661-00	CAP, MICA 33PF
CHOICE	1-109-663-00	CAP, MICA 39PF
	1-109-665-00	CAP, MICA 47PF
	1-109-667-00	CAP, MICA 56PF
	1-109-669-00	CAP, MICA 68PF
	1-109-671-00	CAP, MICA 82PF
H1	8-825-737-50	HEAD, AUDIO/CTL R/P

SE-1 BOARD

1-603-024-00	PC BOARD, SE-1
8-719-411-02	DIODE, ON1102SF

SE-2 BOARD

1-603-025-00	PC BOARD, SE-2
8-719-447-82	DIODE, ON1106SF

SRC-3 BOARD

1-601-062-00	PC BOARD, SRC-3
1-560-240-00	CONTACT

Ref. No.	Part No.	Description
SUB CONTROL BOARD		
	A-6025-063-A	COMPLETE PCB, SUB CONTROL
CN351	1-508-743-00	TOP TYPE RECEPTACLE, 5P, MALE
CN352	1-508-743-00	TOP TYPE RECEPTACLE, 5P, MALE
CN353	1-508-744-00	TOP TYPE RECEPTACLE, 10P, MALE
CN354	1-508-845-00	TOP TYPE RECEPTACLE, 6P, MALE
CN355	1-508-845-00	TOP TYPE RECEPTACLE, 6P, MALE
CN356	1-508-904-00	TOP TYPE RECEPTACLE, 6P, MALE
CN357	**1-561-365-00**	**COAXIAL CONNECTOR, MALE**
Q1	**8-729-663-47**	**TRANSISTOR 2SC1364**
Q2	**8-729-663-47**	**TRANSISTOR 2SC1364**
R15	**1-226-557-00**	**RES, VAR 300**
R16	**1-226-557-00**	**RES, VAR 300**
R17	**1-226-556-00**	**RES, VAR 50K**
R18	**1-226-556-00**	**RES, VAR 50K**
R19	**1-226-556-00**	**RES, VAR 50K**
R20	**1-226-556-00**	**RES, VAR 50K**
R21	**1-224-588-00**	**RES, VAR, CARBON 100K**
SW1	**1-552-061-00**	**SWITCH, SLIDE**
SW2	**1-516-963-00**	**SWITCH, SLIDE**
SW3	**1-552-059-00**	**SWITCH, SLIDE**
SW4	**1-516-994-00**	**SWITCH, SLIDE**
SW5	**1-516-995-00**	**SWITCH, SLIDE**
SYNC PULSE BOARD		
	A-6015-032-A	COMPLETE PCB, SYNC PULSE (NTSC)
	A-6015-033-B	COMPLETE PCB, SYNC PULSE (PS)
	A-6015-034-A	COMPLETE PCB, SYNC PULSE(PM)

Ref. No.	Part No.	Description
C3	**1-107-073-00**	**CAP, MICA 33PF 5% 50V**
C10	**1-102-108-00**	**CAP, CERAMIC 150PF 10% 50V (PM, PS)**
C11	**1-161-036-00**	**CAP, CERAMIC 0.047 20% 25V (PM, PS)**
C19	**1-107-091-00**	**CAP, MICA 180PF 5% 50V (PS ONLY)**
C20	**1-131-408-00**	**CAP, TANTALUM 1 10% 35V (PS ONLY)**
C22	**1-109-559-00**	**CAP, MICA 820PF 5% 100V**
C23	**1-107-093-00**	**CAP, MICA 220PF 5% 50V**
C24	**1-109-558-00**	**CAP, MICA 750PF 5% 100V**
C27	**1-161-036-00**	**CAP, CERAMIC 0.047 20% 25V**
C28	**1-161-036-00**	**CAP, CERAMIC 0.047 20% 25V**
C29	**1-107-065-00**	**CAP, MICA 15PF 5% 50V**
C30	**1-131-371-00**	**CAP, TANTALUM 10 10% 16V**
C37	**1-161-030-00**	**CAP, CERAMIC 0.0047 20% 25V**
C40	**1-109-623-00**	**CAP, MICA 0.0086 1% 500V**
C44	**1-161-036-00**	**CAP, CERAMIC 0.047 20% 25V**
C46	**1-161-036-00**	**CAP, CERAMIC 0.047 20% 25V**
C48	**1-109-642-00**	**CAP, MICA 0.0022 2% 500V**
C54	**1-161-036-00**	**CAP, CERAMIC 0.047 20% 25V**
C55	**1-161-036-00**	**CAP, CERAMIC 0.047 20% 25V**
C57	**1-109-602-00**	**CAP, MICA 0.001 1% 100V**
C57	**1-109-622-00**	**CAP, MICA 0.0012 1% 100V**
C58	**1-109-157-00**	**CAP, MICA 300PF 5% 300V**
C58	**1-109-159-00**	**CAP, MICA 360PF 5% 300V**
C58	**1-109-160-00**	**CAP, MICA 390PF 5% 300V**
C58	**1-109-550-00**	**CAP, MICA 430PF 5% 100V**
C58	**1-109-631-00**	**CAP, MICA 330PF 2% 500V**
C59	**1-109-602-00**	**CAP, MICA 0.001 1% 100V**
C59	**1-109-742-00**	**CAP, MICA 0.0013 1% 100V**
C60	**1-107-085-00**	**CAP, MICA 100PF 5% 50V**
C64	**1-109-561-00**	**CAP, MICA 0.001 5% 100V**
C70	**1-161-036-00**	**CAP, CERAMIC 0.047 20% 25V**
C71	**1-161-036-00**	**CAP, CERAMIC 0.047 20% 25V**
C72	**1-161-036-00**	**CAP, CERAMIC 0.047 20% 25V**
C73	**1-161-036-00**	**CAP, CERAMIC 0.047 20% 25V**
C74	**1-161-036-00**	**CAP, CERAMIC 0.047 20% 25V**
C82	**1-161-036-00**	**CAP, CERAMIC 0.047 20% 25V (PM, PS)**
C84	**1-109-540-00**	**CAP, MICA 180PF 5% 100V**
C86	**1-109-555-00**	**CAP, MICA 560PF 5% 100V**
C87	**1-109-533-00**	**CAP, MICA 82PF 5% 100V**
C88	**1-107-107-00**	**CAP, MICA 10PF 10% 50V**
C89	**1-102-114-00**	**CAP, CERAMIC 470PF 10% 50V**
CF1	**1-527-497-11**	**FILTER CERAMIC, 4.55MHz (PS ONLY)**

Ref. No.	Part No.	Description
D1	8-719-815-55	DIODE 1S1555
D2	8-719-815-55	DIODE 1S1555
D3	8-719-815-55	DIODE 1S1555
D4	8-719-815-55	DIODE 1S1555
D5	8-719-815-55	DIODE 1S1555
D7	8-719-815-55	DIODE 1S1555
D8	8-719-815-55	DIODE 1S1555
D9	8-719-815-55	DIODE 1S1555
D10	8-719-815-55	DIODE 1S1555
D11	8-719-815-55	DIODE 1S1555
D12	8-719-162-07	DIODE RD6.2E-B
D13	8-719-815-55	DIODE 1S1555
D14	8-719-709-25	DIODE 1S1925P
D16	8-719-815-55	DIODE 1S1555
IC1	8-751-300-00	IC CX-130; SONY
IC2	8-759-908-20	IC TL820CN; TI (PM, PS)
IC3	8-759-908-20	IC TL820CN; TI
IC4	8-759-275-14	IC TA7504M; TI
IC5	8-759-900-74	IC SN74LS74AN, TTL; TI (PS ONLY)
IC6	8-759-902-21	IC SN74LS221N, TTL; TI (PS ONLY)
IC7	8-759-900-86	IC SN74LS86N, TTL; TI
IC8	8-759-900-74	IC SN74LS74AN, TTL; TI (PS ONLY)
IC9	8-759-902-21	IC SN74LS221N, TTL; TI (PS ONLY)
IC10	8-759-901-91	IC SN74LS191N, TTL; TI (PM, PS)
IC11	8-759-900-10	IC SN74LS10N, TTL; TI (PM, PS)
IC12	8-759-900-00	IC SN74LS00N, TTL; TI (PM, PS)
IC13	8-759-901-90	IC SN74LS190N, TTL; TI (PM, PS)
IC14	8-759-900-04	IC SN74LS04N, TTL; TI (PM, PS)
IC15	8-759-900-74	IC SN74LS74AN, TTL; TI (PM, PS)
IC16	8-759-901-91	IC SN74LS191N, TTL; TI
IC17	8-759-901-91	IC SN74LS191N, TTL; TI
IC18	8-759-901-91	IC SN74LS191N, TTL; TI
IC20	8-759-902-21	IC SN74LS221N, TTL; TI
IC21	8-759-902-21	IC SN74LS221N, TTL; TI
IC22	8-759-900-00	IC SN74LS00N, TTL; TI
IC23	8-759-900-74	IC SN74LS74AN, TTL; TI
IC24	8-759-902-21	IC SN74LS221N, TTL; TI
IC25	8-759-900-04	IC SN74LS04N, TTL; TI
IC26	8-759-902-21	IC SN74LS221N, TTL; TI
IC27	8-759-902-21	IC SN74LS221N, TTL; TI
IC28	8-759-900-04	IC SN74LS04N, TTL; TI
IC29	8-759-900-14	IC SN74LS14N, TTL; TI
IC30	8-759-900-33	IC SN74LS33N, TTL; TI
IC31	8-759-900-00	IC SN74LS00N, TTL; TI
IC32	8-759-045-38	IC MC14538BCP, C-MOS; MOTOROLA
IC33	8-759-045-57	IC MC14557BCP, C-MOS; MOTOROLA
IC34	8-759-902-21	IC SN74LS221N, TTL; TI
IC35	8-759-240-13	IC TC4013BP, C-MOS (CD4013BE; RCA)
L3	1-409-339-00	COIL, TOROIDAL
Q1	8-729-384-48	TRANSISTOR 2SA844
Q2	8-729-384-48	TRANSISTOR 2SA844
Q3	8-729-384-48	TRANSISTOR 2SA844
Q4	8-724-375-01	TRANSISTOR 2SC403C
Q5	8-724-375-01	TRANSISTOR 2SC403C
Q6	8-729-364-12	TRANSISTOR 2SC641K
Q7	8-724-375-01	TRANSISTOR 2SC403C
Q8	8-729-364-12	TRANSISTOR 2SC641K
Q9	8-724-375-01	TRANSISTOR 2SC403C
Q12	8-729-384-48	TRANSISTOR 2SA844
Q13	8-729-364-12	TRANSISTOR 2SC641K
Q14	8-729-364-12	TRANSISTOR 2SC641K
Q15	8-729-364-12	TRANSISTOR 2SC641K
Q16	8-729-663-47	TRANSISTOR 2SC1364
Q17	8-729-612-77	TRANSISTOR 2SA1027R
Q18	8-729-364-12	TRANSISTOR 2SC641K
Q19	8-729-384-48	TRANSISTOR 2SA844
Q20	8-729-663-47	TRANSISTOR 2SC1364
Q21	8-729-663-47	TRANSISTOR 2SC1364
Q22	8-761-622-00	TRANSISTOR 2SC1636
Q23	8-723-302-00	TRANSISTOR 2SK43-2
Q24	8-729-663-47	TRANSISTOR 2SC1364
Q25	8-729-384-48	TRANSISTOR 2SA844
Q26	8-729-384-48	TRANSISTOR 2SA844
Q27	8-729-384-48	TRANSISTOR 2SA844
Q28	8-729-663-47	TRANSISTOR 2SC1364
Q29	8-729-663-47	TRANSISTOR 2SC1364
Q30	8-729-374-02	TRANSISTOR 2SB740
Q31	8-724-375-01	TRANSISTOR 2SC403C
R25	1-214-147-00	RES, METAL 4.3K 1/4W 1% (PS ONLY)
R26	1-214-154-00	RES, METAL 8.2K 1/4W 1% (PS ONLY)
R34	1-224-938-00	RES, VAR, METAL 2K (PS ONLY)
R35	1-214-156-00	RES, METAL 10K 1% 1/4W (PS ONLY)
R40	1-224-940-00	RES, VAR, METAL 10K
R41	1-214-173-00	RES, METAL 51K 1% 1/4W
R43	1-231-410-00	RESISTOR BLOCK 10K x 8

Ref. No.	Part No.	Description
R51	1-214-172-00	RES, METAL 47K 1% 1/4W
R52	1-224-940-00	RES, VAR, METAL 10K
R83	1-214-176-00	RES, METAL 68K 1% 1/4W (NTSC, PM)
R83	1-214-167-00	RES, METAL 30K 1% 1/4W (PS)
R83	1-214-172-00	RES, METAL 47K 1% 1/4W
R84	1-224-938-00	RES, VAR, METAL 2K
R96	1-224-943-00	RES, VAR, METAL 100K
R97	1-214-147-00	RES, METAL 4.3K 1% 1/4W
R97	1-214-149-00	RES, METAL 5.1K 1% 1/4W
R97	1-214-168-00	RES, METAL 33K 1% 1/4W
R99	1-214-149-00	RES, METAL 5.1K 1% 1/4W
R111	1-214-143-00	RES, METAL 3K 1% 1/4W
R112	1-214-180-00	RES, METAL 100K 1% 1/4W
R113	1-214-180-00	RES, METAL 100K 1% 1/4W
R114	1-224-939-00	RES, VAR, METAL 5K
R115	1-214-143-00	RES, METAL 3K 1% 1/4W
R117	1-214-143-00	RES, METAL 3K 1% 1/4W
R128	1-214-173-00	RES, METAL 51K 1% 1/4W
R129	1-224-942-00	RES, VAR, METAL 50K
R137	1-214-158-00	RES, METAL 12K 1% 1/4W
R138	1-214-136-00	RES, METAL 1.5K 1% 1/4W
R139	1-224-939-00	RES, VAR, METAL 5K
R140	1-214-177-00	RES, METAL 75K 1% 1/4W
R141	1-214-156-00	RES, METAL 10K 1% 1/4W
R142	1-214-176-00	RES, METAL 68K 1% 1/4W (NTSC, PM)
R142	1-214-177-00	RES, METAL 75K 1% 1/4W (PS)
SW1	1-552-101-00	SWITCH, SLIDE
SW2	1-516-925-21	SWITCH, DIP, 8-CKT
SW3	1-552-101-00	SWITCH, SLIDE

SYS-1 BOARD

A-6017-030-A	COMPLETE PCB, SYS-1 (NTSC, PM)
A-6017-031-A	COMPLETE PCB, SYS-1 (PS)

Ref. No.	Part No.	Description
C1	1-161-036-00	CAP, CERAMIC 0.047 20% 25V
C3	1-161-036-00	CAP, CERAMIC 0.047 20% 25V
C15	1-161-036-00	CAP, CERAMIC 0.047 20% 25V
C16	1-161-036-00	CAP, CERAMIC 0.047 20% 25V
C17	1-161-036-00	CAP, CERAMIC 0.047 20% 25V
C18	1-161-036-00	CAP, CERAMIC 0.047 20% 25V
C19	1-161-036-00	CAP, CERAMIC 0.047 20% 25V
C20	1-161-036-00	CAP, CERAMIC 0.047 20% 25V
C22	1-161-036-00	CAP, CERAMIC 0.047 20% 25V
C23	1-161-036-00	CAP, CERAMIC 0.047 20% 25V
C24	1-161-036-00	CAP, CERAMIC 0.047 20% 25V
C25	1-161-036-00	CAP, CERAMIC 0.047 20% 25V
C26	1-161-036-00	CAP, CERAMIC 0.047 20% 25V
C27	1-161-036-00	CAP, CERAMIC 0.047 20% 25V
C37	1-161-036-00	CAP, CERAMIC 0.047 20% 25V
C40	1-161-036-00	CAP, CERAMIC 0.047 20% 25V
C42	1-107-159-00	CAP, MICA 33PF 5% 500V
C43	1-131-352-00	CAP, TANTALUM 6.8 10% 35V
C44	1-131-352-00	CAP, TANTALUM 6.8 10% 35V
C45	1-131-355-00	CAP, TANTALUM 2.2 10% 25V
C47	1-131-352-00	CAP, TANTALUM 6.8 10% 35V
C48	1-131-387-00	CAP, TANTALUM 47 10% 6.3V
C49	1-131-408-00	CAP, TANTALUM 1 10% 35V (NTSC, PM)
C49	1-131-348-00	CAP, TANTALUM 1.5 10% 35V (PS)
C50	1-131-408-00	CAP, TANTALUM 1 10% 35V (NTSC, PM)
C50	1-131-348-00	CAP, TANTALUM 1.5 10% 35V (PS)
C53	1-131-380-00	CAP, TANTALUM 33 10% 10V
C54	1-131-380-00	CAP, TANTALUM 33 10% 10V
C55	1-161-036-00	CAP, CERAMIC 0.047 20% 25V
C56	1-161-036-00	CAP, CERAMIC 0.047 10% 25V
C57	1-108-579-00	CAP, MYLAR 0.01 5% 50V
D1	8-719-815-80	DIODE 1S1587
IC1	8-759-900-02	IC SN74LS02N, TTL; TI
IC2	8-759-942-59	IC SN74259N, TTL; TI
IC3	8-759-900-10	IC SN74LS10N, TTL; TI
IC4	8-759-900-04	IC SN74LS04N, TTL; TI
IC5	8-759-900-00	IC SN74LS00N, TTL; TI
IC6	8-759-900-08	IC SN74LS08N, TTL; TI
IC7	8-759-900-10	IC SN74LS10N, TTL; TI
IC8	8-759-900-00	IC SN74LS00N, TTL; TI
IC9	8-759-900-02	IC SN74LS02N, TTL; TI
IC10	8-759-991-23	IC SN74LS123NS, TTL; TI
IC11	8-759-900-14	IC SN74LS14N, TTL; TI
IC12	8-759-900-04	IC SN74LS04N, TTL; TI
IC13	8-759-900-00	IC SN74LS00N, TTL; TI
IC14	8-759-941-48	IC SN74148N, TTL; TI
IC15	8-759-900-42	IC SN74LS42N, TTL; TI

Ref. No.	Part No.	Description
IC16	8-759-901-51	IC SN74LS151N, TTL; TI
IC17	8-759-991-23	IC SN74LS123NS, TTL; TI
IC18	8-759-900-00	IC SN74LS00N, TTL; TI
IC19	8-759-942-59	IC SN74259N, TTL; TI
IC20	8-759-901-07	IC 74LS107AN, TTL; TI
IC21	8-759-900-04	IC SN74LS04N, TTL; TI
IC22	8-759-900-04	IC SN74LS04N, TTL; TI
IC23	8-759-354-52	IC HD75452P (SN75452BP; TI)
IC24	8-759-901-07	IC 74LS107AN, TTL; TI
IC25	8-759-901-93	IC SN74LS193N, TTL; TI
IC26	8-759-902-21	IC SN74LS221N, TTL; TI
IC27	8-759-900-00	IC SN74LS00N, TTL; TI
IC28	8-759-900-00	IC SN74LS00N, TTL; TI
IC29	8-759-900-04	IC SN74LS04N, TTL; TI
IC30	8-759-901-51	IC SN74LS151N, TTL; TI
IC31	8-759-901-51	IC SN74LS151N, TTL; TI
IC32	8-759-901-51	IC SN74LS151N, TTL; TI
IC33	8-759-900-04	IC SN74LS04N, TTL; TI
IC34	8-759-991-23	IC SN74LS123NS, TTL; TI
L1	1-409-339-00	COIL, TOROIDAL
L2	1-407-169-XX	INDUCTOR MICRO 100
L3	1-407-169-XX	INDUCTOR MICRO 100
Q1	8-729-663-47	TRANSISTOR 2SC1364
Q2	8-729-663-47	TRANSISTOR 2SC1364
Q3	8-729-663-47	TRANSISTOR 2SC1364
Q4	8-729-663-47	TRANSISTOR 2SC1364

Ref. No.	Part No.	Description
C17	1-161-036-00	CAP, CERAMIC 0.047 20% 25V
C18	1-161-036-00	CAP, CERAMIC 0.047 20% 25V
C19	1-161-036-00	CAP, CERAMIC 0.047 20% 25V
C20	1-161-036-00	CAP, CERAMIC 0.047 20% 25V
C21	1-161-036-00	CAP, CERAMIC 0.047 20% 25V
C23	1-161-036-00	CAP, CERAMIC 0.047 20% 25V
C24	1-161-036-00	CAP, CERAMIC 0.047 20% 25V
C25	1-161-036-00	CAP, CERAMIC 0.047 20% 25V
C26	1-161-036-00	CAP, CERAMIC 0.047 20% 25V
C27	1-161-036-00	CAP, CERAMIC 0.047 20% 25V
C28	1-161-036-00	CAP, CERAMIC 0.047 20% 25V
C29	1-161-036-00	CAP, CERAMIC 0.047 20% 25V
C30	1-161-036-00	CAP, CERAMIC 0.047 20% 25V
C35	1-131-352-00	CAP, TANTALUM 6.8 10% 35V
C37	1-131-408-00	CAP, TANTALUM 1 10% 35V
C38	1-131-352-00	CAP, TANTALUM 6.8 10% 35V
C39	1-131-352-00	CAP, TANTALUM 6.8 10% 35V
C40	1-131-352-00	CAP, TANTALUM 6.8 10% 35V
C41	1-131-371-00	CAP, TANTALUM 10 10% 16V
C42	1-131-379-00	CAP, TANTALUM 22 10% 10V
C45	1-131-371-00	CAP, TANTALUM 10 10% 16V
C46	1-131-371-00	CAP, TANTALUM 10 10% 16V
C47	1-131-352-00	CAP, TANTALUM 6.8 10% 35V
C49	1-131-371-00	CAP, TANTALUM 10 10% 16V
C50	1-131-371-00	CAP, TANTALUM 10 10% 16V
C51	1-131-352-00	CAP, TANTALUM 6.8 10% 35V
C52	1-131-406-00	CAP, TANTALUM 0.47 10% 35V
C53	1-131-352-00	CAP, TANTALUM 6.8 10% 35V
C54	1-131-352-00	CAP, TANTALUM 6.8 10% 35V
C55	1-131-427-00	CAP, TANTALUM 220 20% 6.3V
C101	1-131-408-00	CAP, TANTALUM 1 10% 35V
C102	1-102-074-00	CAP, CERAMIC 1000PF 10% 50V

SYS-2 BOARD

	A-6017-032-A	COMPLETE PCB, SYS-2
C1	1-161-036-00	CAP, CERAMIC 0.047 20% 25V
C4	1-161-036-00	CAP, CERAMIC 0.047 20% 25V
C14	1-161-036-00	CAP, CERAMIC 0.047 20% 25V
C15	1-161-036-00	CAP, CERAMIC 0.047 20% 25V
C16	1-161-036-00	CAP, CERAMIC 0.047 20% 25V

IC1	8-759-900-14	IC SN74LS14N, TTL; TI
IC2	8-759-942-59	IC SN74259N, TTL; TI
IC3	8-759-900-04	IC SN74LS04N, TTL; TI
IC4	8-759-901-09	IC 74LS109AN, TTL; TI
IC5	8-759-900-00	IC SN74LS00N, TTL; TI
IC6	8-759-942-59	IC SN74259N, TTL; TI
IC7	8-759-900-10	IC SN74LS10N, TTL; TI
IC8	8-759-900-00	IC SN74LS00N, TTL; TI
IC9	8-759-900-10	IC SN74LS10N, TTL; TI
IC10	8-759-900-14	IC SN74LS14N, TTL; TI
IC11	8-759-900-08	IC SN74LS08N, TTL; TI
IC12	8-759-900-10	IC SN74LS10N, TTL; TI
IC13	8-759-900-02	IC SN74LS02N, TTL; TI
IC14	8-759-900-02	IC SN74LS02N, TTL; TI
IC15	8-759-901-09	IC 74LS109AN, TTL; TI

Ref. No.	Part No.	Description
IC16	8-759-900-42	IC SN74LS42N, TTL; TI
IC17	8-759-900-04	IC SN74LS04N, TTL; TI
IC18	8-759-900-10	IC SN74LS10N, TTL; TI
IC19	8-759-900-14	IC SN74LS14N, TTL; TI
IC20	8-759-900-02	IC SN74LS02N, TTL; TI
IC21	8-759-900-42	IC SN74LS42N, TTL; TI
IC22	8-759-901-09	IC 74LS109AN, TTL; TI
IC23	8-759-901-51	IC SN74LS151N, TTL; TI
IC24	8-759-900-00	IC SN74LS00N, TTL; TI
IC25	8-759-900-10	IC SN74LS10N, TTL; TI
IC26	8-759-900-04	IC SN74LS04N, TTL; TI
IC27	8-759-901-09	IC 74LS109AN, TTL; TI
IC28	8-759-901-09	IC 74LS109AN, TTL; TI
IC29	8-759-900-11	IC SN74LS11N, TTL; TI
IC30	8-759-900-08	IC SN74LS08N, TTL; TI
IC31	8-759-901-09	IC 74LS109AN, TTL; TI
IC32	8-759-900-08	IC SN74LS08N, TTL; TI
IC33	8-759-900-00	IC SN74LS00N, TTL; TI
IC34	8-759-900-04	IC SN74LS04N, TTL; TI
IC35	8-759-900-08	IC SN74LS08N, TTL; TI
IC36	8-759-942-59	IC SN74259N, TTL; TI
IC37	8-759-900-02	IC SN74LS02N, TTL; TI
IC38	8-759-900-86	IC SN74LS86N, TTL; TI
IC39	8-759-900-32	IC SN74LS32N, TTL; TI
IC40	8-759-900-02	IC SN74LS02N, TTL; TI
L1	1-409-309-00	COIL, TOROIDAL
Q1	8-729-663-47	TRANSISTOR 2SC1364
Q2	8-729-663-47	TRANSISTOR 2SC1364
Q3	8-729-663-47	TRANSISTOR 2SC1364
Q4	8-729-663-47	TRANSISTOR 2SC1364
Q5	8-729-663-47	TRANSISTOR 2SC1364
Q6	8-729-612-77	TRANSISTOR 2SA1027R
Q7	8-729-663-47	TRANSISTOR 2SC1364
Q8	8-729-663-47	TRANSISTOR 2SC1364
Q9	8-729-663-47	TRANSISTOR 2SC1364
SW1	1-552-508-00	SWITCH, DIP (2-CIRCUIT)

Ref. No.	Part No.	Description
SYS-3A BOARD		
	A-6017-054-A	COMPLETE PCB, SYS-3A (NTSC, PM)
	A-6017-055-A	COMPLETE PCB, SYS-3A (PS)
C3	1-131-405-00	CAP, TANTALUM 0.33 10% 35V
C4	1-161-036-00	CAP, CERAMIC 0.047 20% 25V
C6	1-161-036-00	CAP, CERAMIC 0.047 20% 25V
C11	1-161-036-00	CAP, CERAMIC 0.047 20% 25V
C12	1-161-036-00	CAP, CERAMIC 0.047 20% 25V
C15	1-161-036-00	CAP, CERAMIC 0.047 20% 25V
C16	1-161-036-00	CAP, CERAMIC 0.047 20% 25V
C20	1-161-036-00	CAP, CERAMIC 0.047 20% 25V
C21	1-161-036-00	CAP, CERAMIC 0.047 20% 25V
C22	1-161-036-00	CAP, CERAMIC 0.047 20% 25V
C25	1-161-036-00	CAP, CERAMIC 0.047 20% 25V
C26	1-161-036-00	CAP, CERAMIC 0.047 20% 25V
C29	1-161-036-00	CAP, CERAMIC 0.047 20% 25V
C30	1-161-036-00	CAP, CERAMIC 0.047 20% 25V
C34	1-161-036-00	CAP, CERAMIC 0.047 20% 25V
C35	1-161-036-00	CAP, CERAMIC 0.047 20% 25V
C41	1-161-036-00	CAP, CERAMIC 0.047 20% 25V
C45	1-161-036-00	CAP, CERAMIC 0.047 20% 25V
C49	1-161-036-00	CAP, CERAMIC 0.047 20% 25V
C51	1-161-036-00	CAP, CERAMIC 0.047 20% 25V
C57	1-131-427-00	CAP, TANTALUM 220 20% 6.3V
C58	1-131-380-00	CAP, TANTALUM 33 10% 10V
C60	1-161-036-00	CAP, CERAMIC 0.047 20% 25V
C62	1-161-036-00	CAP, CERAMIC 0.047 20% 25V
C64	1-102-114-00	CAP, CERAMIC 470PF 10% 50V
C65	1-102-114-00	CAP, CERAMIC 470PF 10% 50V
C66	1-102-114-00	CAP, CERAMIC 470PF 10% 50V
C68	1-102-114-00	CAP, CERAMIC 470PF 10% 50V
D1	8-719-815-55	DIODE 1S1555
IC1	8-759-991-23	IC SN74LS123NS, TTL, TI
IC2	8-759-901-51	IC SN74LS151N, TTL; TI
IC3	8-759-900-92	IC SN74LS92N, TTL; TI
IC4	8-759-902-90	IC SN74LS290N, TTL; TI
IC5	8-759-901-51	IC SN74LS151N, TTL; TI
IC6	8-759-900-10	IC SN74LS10N, TTL; TI
IC7	8-759-900-02	IC SN74LS02N, TTL; TI
IC8	8-759-900-42	IC SN74LS42N, TTL; TI
IC9	8-759-900-00	IC SN74LS00N, TTL; TI
IC10	8-759-900-08	IC SN74LS08N, TTL; TI

Ref. No.	Part No.	Description
IC11	8-759-900-04	IC SN74LS04N, TTL; TI
IC12	8-759-974-07	IC SN7407N, TTL; TI
IC13	8-759-900-10	IC SN74LS10N, TTL; TI
IC14	8-759-900-74	IC SN74LS74AN, TTL; TI
IC15	8-759-900-04	IC SN74LS04N, TTL; TI
IC16	8-759-900-42	IC SN74LS42N, TTL; TI
IC17	8-759-900-00	IC SN74LS00N, TTL; TI
IC18	8-759-900-00	IC SN74LS00N, TTL; TI
IC19	8-759-900-00	IC SN74LS00N, TTL; TI
IC20	8-759-900-86	IC SN74LS86N, TTL; TI
IC21	8-759-900-08	IC SN74LS08N, TTL; TI
IC22	8-759-900-02	IC SN74LS02N, TTL; TI
IC23	8-759-900-08	IC SN74LS08N, TTL; TI
IC24	8-759-901-58	IC SN74LS158N, TTL; TI
IC25	8-759-903-75	IC SN74LS375, TTL; TI
IC26	8-759-901-75	IC SN74LS175N, TTL; TI
IC27	8-759-900-32	IC SN74LS32N, TTL; TI
IC28	8-759-900-02	IC SN74LS02N, TTL; TI
IC29	8-759-991-23	IC SN74LS123NS, TTL; TI
IC30	8-759-900-14	IC SN74LS375N, TTL; TI
IC31	8-759-901-64	IC SN74LS164N, TTL; TI
IC32	8-759-900-04	IC SN74LS04N, TTL; TI
IC33	8-759-900-00	IC SN74LS00N, TTL; TI
IC34	8-759-900-02	IC SN74LS02N, TTL; TI
IC35	8-759-900-08	IC SN74LS08N, TTL; TI
IC36	8-759-901-09	IC SN74LS109N, TTL; TI
IC37	8-759-900-08	IC SN74LS08N, TTL; TI
IC38	8-759-991-23	IC SN74LS123NS, TTL; TI
IC39	8-759-991-23	IC SN74LS123NS, TTL; TI
IC40	8-759-900-00	IC SN74LS00N, TTL; TI
IC41	8-759-900-11	IC SN74LS11N, TTL; TI
IC42	8-759-900-86	IC SN74LS86N, TTL; TI
IC43	8-759-900-51	IC SN74LS51N, TTL; TI
IC44	8-759-901-32	IC SN74LS132N, TTL; TI
L1	1-409-339-00	COIL, TOROIDAL
Q1	8-729-612-77	TRANSISTOR 2SA1027R
Q3	8-729-612-77	TRANSISTOR 2SA1027R
Q4	8-729-663-47	TRANSISTOR 2SC1364
Q5	8-729-612-77	TRANSISTOR 2SA1027R
Q6	8-729-663-47	TRANSISTOR 2SC1364
Q7	8-761-622-00	TRANSISTOR 2SC1636
Q8	8-729-663-47	TRANSISTOR 2SC1364
Q9	8-729-612-77	TRANSISTOR 2SA1027R
Q10	8-729-663-47	TRANSISTOR 2SC1364
Q11	8-761-622-00	TRANSISTOR 2SC1636
Q12	8-729-663-47	TRANSISTOR 2SC1364

Ref. No.	Part No.	Description
R33	1-224-943-00	RES, VAR, METAL 100K
R45	1-224-936-00	RES, VAR, METAL 500
R48	1-224-942-00	RES, VAR, METAL 50K
R52	1-224-943-00	RES, VAR, METAL 100K
R53	1-224-941-00	RES, VAR, METAL 20K
R69	1-224-943-00	RES, VAR, METAL 100K
R77	1-214-112-00	RES, METAL 150 1% 1/4W

SYS SW-1 BOARD

	A-6017-040-A	COMPLETE PCB, SYS SW-1
C2	1-131-403-00	CAP, TANTALUM 0.15 10% 35V
C3	1-131-404-00	CAP, TANTALUM 0.22 10% 35V
C5	1-131-356-00	CAP, TANTALUM 3.3 10% 25V
C10	1-107-085-00	CAP, MICA 100PF 5% 50V
C13	1-102-074-00	CAP, CERAMIC 0.001 10% 50V
C14	1-131-357-00	CAP, TANTALUM 4.7 10% 25V
C16	1-107-073-00	CAP, MICA 33PF 5% 50V
C17	1-107-073-00	CAP, MICA 33PF 5% 50V
C18	1-107-073-00	CAP, MICA 33PF 5% 50V
C19	1-131-240-00	CAP, TANTALUM 47 20% 16V
C20	1-161-034-00	CAP, CERAMIC 0.022 20% 25V
C21	1-161-034-00	CAP, CERAMIC 0.022 20% 25V
C22	1-161-034-00	CAP, CERAMIC 0.022 20% 25V
C23	1-131-240-00	CAP, TANTALUM 47 20% 16V
C24	1-131-240-00	CAP, TANTALUM 47 20% 16V
C25	1-161-034-00	CAP, CERAMIC 0.022 20% 25V
C26	1-161-034-00	CAP, CERAMIC 0.022 20% 25V
C27	1-161-034-00	CAP, CERAMIC 0.022 20% 25V
C28	1-161-034-00	CAP, CERAMIC 0.022 20% 25V
C29	1-161-034-00	CAP, CERAMIC 0.022 20% 25V
C30	1-161-034-00	CAP, CERAMIC 0.022 20% 25V
C31	1-161-034-00	CAP, CERAMIC 0.022 20% 25V
C32	1-161-034-00	CAP, CERAMIC 0.022 20% 25V
C33	1-161-034-00	CAP, CERAMIC 0.022 20% 25V
C39	1-161-009-00	CAP, CERAMIC 0.0047 10% 25V
C40	1-161-034-00	CAP, CERAMIC 0.022 20% 25V
C41	1-161-034-00	CAP, CERAMIC 0.022 20% 25V
C42	1-161-026-00	CAP, CERAMIC 0.001 20% 25V
C43	1-161-026-00	CAP, CERAMIC 0.001 20% 25V
C44 ~ C49	1-161-013-00	CAP, CERAMIC 0.01 20% 25V

Ref. No.	Part No.	Description
CN411	1-508-906-00	TOP TYPE RECEPTACLE, 10P, MALE
CN412	1-508-906-00	TOP TYPE RECEPTACLE, 10P, MALE
CN413	1-508-905-00	TOP TYPE RECEPTACLE, 8P, MALE
CN414	1-508-951-00	SIDE TYPE RECEPTACLE, 10P, MALE
CN415	1-508-951-00	SIDE TYPE RECEPTACLE, 10P, MALE
CN416	1-508-951-00	SIDE TYPE RECEPTACLE, 10P, MALE
CN422	1-561-056-00	PLUG HOUSING, 12P, FEMALE
D1	**8-719-815-55**	**DIODE 1S1555**
IC1	**8-759-354-51**	**IC HD75451AP (SN75451BP; TI)**
IC2	**8-759-354-51**	**IC HD75451AP (SN75451BP; TI)**
IC3	**8-759-354-51**	**IC HD75451AP (SN75451BP; TI)**
IC4	**8-759-991-23**	**IC SN74LS123NS, TTL; TI**
IC5	**8-759-900-00**	**IC SN74LS00N, TTL; TI**
IC6	**8-759-900-14**	**IC SN74LS14N, TTL; TI**
IC7	**8-759-902-21**	**IC SN74LS221N, TTL; TI**
IC8	**8-759-901-93**	**IC SN74LS193N, TTL; TI**
IC9	**8-759-901-07**	**IC SN74LS107AN, TTL; TI**
IC10	**8-759-900-02**	**IC SN74LS02N, TTL; TI**
IC11	**8-759-900-04**	**IC SN74LS04N, TTL; TI**
IC12	**8-759-900-04**	**IC SN74LS04N, TTL; TI**
IC13	**8-759-900-00**	**IC SN74LS00N, TTL; TI**
IC14	**8-759-970-00**	**IC SN74LS95BN, TTL; TI**
IC15	**8-759-902-21**	**IC SN74LS221N, TTL; TI**
IC16	**8-759-901-74**	**IC SN74SN174N, TTL; TI**
IC17	**8-759-900-86**	**IC SN74LS86N, TTL; TI**
IC18	**8-759-900-03**	**IC SN74LS03N, TTL; TI**
IC19	**8-759-750-44**	**IC MB7052-19C1, PROM; FUJITSU**
IC20	**8-759-900-04**	**IC SN74LS04N, TTL; TI**
IC21	**8-759-900-05**	**IC SN74LS05N, TTL; TI**
IC22	**8-759-900-00**	**IC SN74LS00N, TTL; TI**
IC23	**8-759-901-64**	**IC SN74LS164N, TTL; TI**
IC24	**8-759-901-61**	**IC SN74LS161AN, TTL; TI**
IC25	**8-759-902-59**	**IC SN74LS259N, TTL; TI**
IC26	**8-759-900-11**	**IC SN74LS11N, TTL; TI**
IC27	**8-759-900-21**	**IC SN74LS21N, TTL; TI**
IC28	**8-759-900-42**	**IC SN74LS42N, TTL; TI**
IC29	**8-759-900-04**	**IC SN74LS04N, TTL; TI**
IC30	**8-759-750-45**	**IC MB7052-10C1, PROM; FUJITSU**
IC31	**8-759-901-51**	**IC SN74LS151N, TTL; TI**
IC32	**8-759-901-51**	**IC SN74LS151N, TTL; TI**
IC33	**8-759-901-51**	**IC SN74LS151N, TTL; TI**
IC34	**8-759-901-51**	**IC SN74LS151N, TTL; TI**
IC35	**8-759-900-11**	**IC SN74LS11N, TTL; TI**
IC36	**8-759-900-11**	**IC SN74LS11N, TTL; TI**
IC37	**8-759-974-07**	**IC SN7407N, TTL; TI**
IC38	**8-759-900-02**	**IC SN74LS02N, TTL; TI**
IC39	**8-759-900-00**	**IC SN74LS00N, TTL; TI**
IC40	**8-759-902-59**	**IC SN74LS259N, TTL; TI**
IC41	**8-759-900-05**	**IC SN74LS05N, TTL; TI**
IC42	**8-759-991-23**	**IC SN74LS123NS, TTL; TI**
L1	**1-409-339-00**	**COIL, TOROIDAL**
L2	**1-409-339-00**	**COIL, TOROIDAL**
L3	**1-407-165-XX**	**INDUCTOR MICRO 47**
L4	**1-407-182-XX**	**INDUCTOR MICRO 2.2**
L5	**1-407-182-XX**	**INDUCTOR MICRO 2.2**
PL1 ~ 6	**1-518-311-00**	**LAMP, PILOT, 5V/115mA**
Q1	**8-729-663-47**	**TRANSISTOR 2SC1364**
Q2	**8-729-177-43**	**TRANSISTOR 2SD774**
Q3	**8-729-177-43**	**TRANSISTOR 2SD774**
Q4	**8-729-177-43**	**TRANSISTOR 2SD774**
Q5	**8-729-177-43**	**TRANSISTOR 2SD774**
Q6	**8-729-177-43**	**TRANSISTOR 2SD774**
Q7	**8-729-177-43**	**TRANSISTOR 2SD774**
Q8	**8-729-663-47**	**TRANSISTOR 2SC1364**
Q9	**8-729-663-47**	**TRANSISTOR 2SC1364**
Q10	**8-729-663-47**	**TRANSISTOR 2SC1364**
Q11	**8-729-663-47**	**TRANSISTOR 2SC1364**
Q12	**8-729-663-47**	**TRANSISTOR 2SC1364**
Q13	**8-729-663-47**	**TRANSISTOR 2SC1364**
Q14	**8-719-663-47**	**TRANSISTOR 2SC1364**
Q15	**8-729-663-47**	**TRANSISTOR 2SC1364**
Q16	**8-729-663-47**	**TRANSISTOR 2SC1364**
R46	**1-224-935-00**	**RES, VAR, METAL 200**
RB1	**1-231-533-00**	**RESISTOR BLOCK, 10K x 4**
RB2	**1-231-533-00**	**RESISTOR BLOCK, 10K x 4**
RB3	**1-231-533-00**	**RESISTOR BLOCK, 10K x 4**
S1	**1-552-070-00**	**SWITCH, PUSH**
S2	**1-552-070-00**	**SWITCH, PUSH**
S3	**1-552-070-00**	**SWITCH, PUSH**
S4	**1-552-070-00**	**SWITCH, PUSH**
S5	**1-552-070-00**	**SWITCH, PUSH**
S6	**1-552-070-00**	**SWITCH, PUSH**

Ref. No.	Part No.	Description
SYS SW-2A BOARD		
	A-6017-067-A	COMPLETE PCB, SYS SW-2A
C1	1-131-355-00	CAP, TANTALUM 2.2 10% 25V
C2	1-131-408-00	CAP, TANTALUM 1 10% 35V
C3	1-131-406-00	CAP, TANTALUM 0.47 10% 35V
C4	1-131-407-00	CAP, TANTALUM 0.68 10% 35V
C8	1-131-355-00	CAP, TANTALUM 2.2 10% 25V
C9	1-131-355-00	CAP, TANTALUM 2.2 10% 25V
C14	1-131-402-00	CAP, TANTALUM 0.1 10% 35V
C15	1-131-355-00	CAP, TANTALUM 2.2 10% 25V
C16	1-131-406-00	CAP, TANTALUM 0.47 10% 35V
C20	1-131-405-00	CAP, TANTALUM 0.33 10% 35V
C23	1-131-371-00	CAP, TANTALUM 10 10% 16V
C25	1-141-408-00	CAP, TANTALUM 1 10% 35V
C27	1-131-373-00	CAP, TANTALUM 22 10% 16V
C31	1-131-371-00	CAP, TANTALUM 10 10% 16V
C32	1-161-034-00	CAP, CERAMIC 0.022 20% 25V
C33	1-161-034-00	CAP, CERAMIC 0.022 20% 25V
C34	1-161-034-00	CAP, CERAMIC 0.022 20% 25V
C35	1-161-034-00	CAP, CERAMIC 0.022 20% 25V
C36	1-161-034-00	CAP, CERAMIC 0.022 20% 25V
C37	1-161-034-00	CAP, CERAMIC 0.022 20% 25V
C38	1-161-034-00	CAP, CERAMIC 0.022 20% 25V
C39	1-161-034-00	CAP, CERAMIC 0.022 20% 25V
C40	1-161-034-00	CAP, CERAMIC 0.022 20% 25V
C41	1-161-034-00	CAP, CERAMIC 0.022 20% 25V
C42	1-161-034-00	CAP, CERAMIC 0.022 20% 25V
C43	1-161-034-00	CAP, CERAMIC 0.022 20% 25V
C44	1-161-034-00	CAP, CERAMIC 0.022 20% 25V
C45	1-161-034-00	CAP, CERAMIC 0.022 20% 25V
C46	1-161-034-00	CAP, CERAMIC 0.022 20% 25V
C48	1-131-408-00	CAP, TANTALUM 1 10% 35V
C49	1-131-408-00	CAP, TANTALUM 1 10% 35V
C51	1-161-009-00	CAP, CERAMIC 0.0047 10% 25V
C52	1-102-114-00	CAP, CERAMIC 470PF 10% 50V
C53	1-102-112-00	CAP, CERAMIC 330PF 10% 50V
C54	1-102-074-00	CAP, CERAMIC 0.001 10% 50V
C55	1-102-074-00	CAP, CERAMIC 0.001 10% 50V
C56	1-101-074-00	CAP, CERAMIC 0.001 10% 50V
C57	1-102-074-00	CAP, CERAMIC 0.001 10% 50V
C58	1-102-074-00	CAP, CERAMIC 0.001 10% 50V
C59	1-102-074-00	CAP, CERAMIC 0.001 10% 50V
C60	1-102-074-00	CAP, CERAMIC 0.001 10% 50V
C61	1-102-074-00	CAP, CERAMIC 0.001 10% 50V
C62	1-102-074-00	CAP, CERAMIC 0.001 10% 50V
C63	1-161-034-00	CAP, CERAMIC 0.022 20% 25V
C64	1-161-013-00	CAP, CERAMIC 0.01 10% 25V

Ref. No.	Part No.	Description
CN422	1-508-997-00	SIDE TYPE RECEPTACLE, 12P, MALE
CN425	1-508-735-00	SIDE TYPE RECEPTACLE, 5P, MALE
CN426	1-508-848-00	SIDE TYPE RECEPTACLE, 6P, MALE
CN451	1-509-989-00	PLUG HOUSING, 10, FEMALE
IC1	8-759-900-92	IC SN74LS92N, TTL; TI
IC2	8-759-974-07	IC SN7407N, TTL; TI
IC3	8-759-991-23	IC SN74LS123NS, TTL; TI
IC4	8-759-900-03	IC SN74LS03N, TTL; TI
IC5	8-759-900-00	IC SN74LS00N, TTL; TI
IC6	8-759-991-23	IC SN74LS123NS, TTL; TI
IC7	8-759-991-23	IC SN74LS123NS, TTL; TI
IC8	8-759-900-00	IC SN74LS00N, TTL; TI
IC9	8-759-991-23	IC SN74LS123NS, TTL; TI
IC10	8-759-900-04	IC SN74LS04N, TTL; TI
IC11	8-759-900-32	IC SN74LS32N, TTL; TI
IC12	8-759-900-02	IC SN74LS02N, TTL; TI
IC13	8-759-900-04	IC SN74LS04N, TTL; TI
IC14	8-759-901-48	IC SN74LS148N, TTL; TI
IC15	8-759-900-08	IC SN74LS08N, TTL; TI
IC16	8-759-901-51	IC SN74LS151N, TTL; TI
IC17	8-759-753-38	IC MB7056-27C2, PROM; FUJITSU
IC18	8-759-901-48	IC SN74LS148N, TTL; TI
IC19	8-759-750-40	IC MB7056-29C1, PROM; FUJITSU
IC20	8-759-753-36	IC MB7056-20CA, PROM; FUJITSU
IC21	8-759-902-59	IC SN74LS259N, TTL; TI
IC22	8-759-900-86	IC SN74LS86N, TTL; TI
IC23	8-759-750-41	IC MB7050-22C1, PROM, FUJITSU
IC24	8-759-901-93	IC SN74LS193N, TTL; TI
IC25	8-759-901-51	IC SN74LS151N, TTL; TI
IC26	8-759-901-93	IC SN74LS193N, TTL; TI
IC27	8-759-900-10	IC SN74LS10N, TTL; TI
IC28	8-759-900-02	IC SN74LS02N, TTL; TI
IC29	8-759-901-51	IC SN74LS151N, TTL; TI
IC30	8-759-900-02	IC SN74LS02N, TTL; TI
IC31	8-759-900-03	IC SN74LS03N, TTL; TI
IC32	8-759-900-14	IC SN74LS14N, TTL; TI
IC33	8-759-900-00	IC SN74LS00N, TTL; TI
IC34	8-759-991-23	IC SN74LS123NS, TTL; TI
IC35	8-759-900-03	IC SN74LS03N, TTL; TI
IC36	8-759-900-04	IC SN74LS04N, TTL; TI
IC37	8-759-901-07	IC 74LS107AN, TTL; TI
IC38	8-759-900-11	IC SN74LS11N, TTL; TI
IC39	8-759-900-11	IC SN74LS11N, TTL; TI
IC40	8-759-900-08	IC SN74LS08N, TTL; TI

Ref. No.	Part No.	Description
IC41	8-759-900-02	IC SN74LS02N, TTL; TI
IC42	8-759-900-00	IC SN74LS00N, TTL; TI
IC43	8-759-900-74	IC SN74LS74AN, TTL; TI
IC44	8-759-900-04	IC SN74LS04N, TTL; TI
IC45	8-759-991-23	IC SN74LS123NS, TTL; TI
IC46	8-759-900-14	IC SN74LS14N, TTL; TI
IC47	8-759-941-91	IC SN74191N, TTL; TI
IC48	8-759-901-23	IC SN74LS123N, TTL; TI
IC49	8-759-901-91	IC SN74LS191N, TTL; TI
IC50	8-759-753-39	IC MB7052-20C2, PROM; FUJITSU
IC51	8-759-750-50	IC MB7051-21C1, PROM; FUJITSU
IC52	8-759-901-57	IC SN74LS157N, TTL; TI
IC53	8-759-750-42	IC MB7056-25C1, PROM; FUJITSU
IC54	8-759-900-74	IC SN74LS74AN, TTL; TI
IC55	8-759-901-57	IC SN74LS157N, TTL; TI
IC55	8-759-901-57	IC SN74LS157N, TTL; TI
IC56	8-759-753-37	IC MB7051-26CA, PROM; FUJITSU
IC57	8-759-045-84	IC MC14584BCP, C-MOS; MOTOROLA
L1	1-407-165-XX	INDUCTOR MICRO 47
Q1	8-759-612-77	TRANSISTOR 2SA1027R
Q2	8-729-612-77	TRANSISTOR 2SA1027R
Q3	8-729-177-43	TRANSISTOR 2SD774
Q4	8-759-663-47	TRANSISTOR 2SC1364
Q5	8-759-177-43	TRANSISTOR 2SD774
Q7	8-729-177-43	TRANSISTOR 2SD774
Q8	8-729-612-77	TRANSISTOR 2SA1027R
Q9	8-761-622-00	TRANSISTOR 2SC1636
Q10	8-729-663-47	TRANSISTOR 2SC1364
R37	1-224-943-00	RES, VAR, METAL 100K
RB1	1-231-385-00	RESISTOR BLOCK, 4.7K x 8
RB2	1-231-385-00	RESISTOR BLOCK, 4.7K x 8
RB3	1-231-385-00	RESISTOR BLOCK, 4.7K x 8
RB4	1-231-533-00	RESISTOR BLOCK, 10K x 4
RB5	1-231-525-00	RESISTOR BLOCK, 4.7K x 4

SYS SW-3A BOARD

Ref. No.	Part No.	Description
	A-6016-068-A	MOUNTED PCB, SYS SW-3A (NTSC, PM)
	A-6016-069-A	MOUNTED PCB, SYS SW-3A (PS)
C1	1-102-074-00	CAP, CERAMIC 1000PF 10% 50V
C4	1-131-402-00	CAP, TANTALUM 0.1 10% 35V
C5	1-102-114-00	CAP, CERAMIC 470PF 10% 50V
C6	1-131-406-00	CAP, TANTALUM 0.47 10% 35V
C8	1-107-085-00	CAP, MICA 100PF 5% 50V
C10	1-131-380-00	CAP, TANTALUM 33 10% 10V
C11	1-131-380-00	CAP, TANTALUM 33 10% 10V
C13	1-131-380-00	CAP, TANTALUM 33 10% 10V
C17	1-161-034-00	CAP, CERAMIC 0.022 20% 25V
C18	1-161-034-00	CAP, CERAMIC 0.022 20% 25V
C19	1-161-034-00	CAP, CERAMIC 0.022 20% 25V
C20	1-161-034-00	CAP, CERAMIC 0.022 20% 25V
C21	1-161-034-00	CAP, CERAMIC 0.022 20% 25V
C22	1-161-034-00	CAP, CERAMIC 0.022 20% 25V
C24	1-102-114-00	CAP, CERAMIC 470PF 10% 50V
C25	1-107-085-00	CAP, MICA 100PF 5% 50V
C26	1-102-114-00	CAP, CERAMIC 470PF 10% 50V
C27	1-102-114-00	CAP, CERAMIC 470PF 10% 50V
C28	1-102-114-00	CAP, CERAMIC 470PF 10% 50V
C29	1-131-380-00	CAP, TANTALUM 33 10% 10V
C30	1-131-408-00	CAP, TANTALUM 1 10% 35V
C34	1-131-381-00	CAP, TANTALUM 47 10% 10V
C35	1-131-380-00	CAP, TANTALUM 33 10% 10V
C36	1-131-381-00	CAP, TANTALUM 47 10% 10V
C40	1-102-114-00	CAP, CERAMIC 470PF 10% 50V
C41	1-102-074-00	CAP, CERAMIC 1000P 10% 50V
C42	1-102-074-00	CAP, CERAMIC 1000P 10% 50V
C44	1-102-074-00	CAP, CERAMIC 1000P 10% 50V
C45	1-102-074-00	CAP, CERAMIC 1000P 10% 50V
C46	1-102-106-00	CAP, CERAMIC 100PF 10% 50V
C47	1-131-369-00	CAP, TANTALUM 4.7 10% 16V
C48	1-161-013-00	CAP, CERAMIC 0.01 10% 25V
D1	8-719-709-25	DIODE 1S1925P
IC1	8-759-902-53	IC SN74LS253N, TTL; TI
IC2	8-759-903-85	IC SN74LS385N, TTL; TI
IC3	8-759-687-23	IC M5L2112AP4 (2112A-4; INTEL)
IC4	8-759-900-51	IC SN74LS51N, TTL; TI
IC5	8-719-900-08	IC SN74LS08N, TTL; TI

Ref. No.	Part No.	Description
IC6	8-759-753-40	IC MB7053-365A, PROM; FUJITSU (NTSC, PM)
IC6	8-759-753-41	IC MB7053-366A, PROM; FUJITSU (PS)
IC7	8-759-753-42	IC MB7051-37CA, PROM; FUJITSU
IC8	8-759-991-23	IC SN74LS123NS, TTL; TI
IC9	8-759-900-04	IC SN74LS04N, TTL; TI
IC10	8-759-901-51	IC SN74LS151N, TTL; TI
IC11	8-759-900-74	IC SN74LS74AN, TTL; TI
IC12	8-759-753-43	IC MB7051-32CA, PROM; FUJITSU
IC13	8-759-750-48	IC MB7052-33C1, PROM; FUJITSU
IC14	8-759-901-91	IC SN74LS191N, TTL; TI
IC15	8-759-901-51	IC SN74LS151N, TTL; TI
IC16	8-759-901-51	IC SN74LS151N, TTL; TI
IC17	8-759-942-59	IC SN74259N, TTL; TI
IC18	8-759-900-32	IC SN74LS32N, TTL; TI
IC19	8-759-900-10	IC SN74LS10N, TTL; TI
IC20	8-759-900-32	IC SN74LS32N, TTL; TI
IC21	8-759-900-02	IC SN74LS02N, TTL; TI
IC22	8-759-900-00	IC SN74LS00N, TTL; TI
IC23	8-759-900-10	IC SN74LS10N, TTL; TI
IC24	8-759-900-00	IC SN74LS00N, TTL; TI
IC25	8-759-900-00	IC SN74LS00N, TTL; TI
IC26	8-759-900-10	IC SN74LS10N, TTL; TI
IC27	8-759-900-86	IC SN74LS86N, TTL; TI
IC28	8-759-900-02	IC SN74LS02N, TTL; TI
IC29	8-759-900-08	IC SN74LS08N, TTL; TI
IC30	8-759-991-23	IC SN74LS123NS, TTL; TI
IC31	8-759-900-00	IC SN74LS00N, TTL; TI
IC32	8-759-942-79	IC SN74279N, TTL; TI
IC33	8-759-900-04	IC SN74LS04N, TTL; TI
IC34	8-759-900-11	IC SN74LS11N, TTL; TI
IC35	8-759-900-74	IC SN74LS74AN, TTL; TI
IC36	8-759-900-32	IC SN74LS32N, TTL; TI
IC37	8-759-900-11	IC SN74LS11N, TTL; TI
IC38	8-759-942-79	IC SN74279N, TTL; TI
IC39	8-759-900-00	IC SN74LS00N, TTL; TI
IC40	8-759-900-32	IC SN74LS32N, TTL; TI
IC41	8-759-901-75	IC SN74LS175N, TTL; TI
IC42	8-759-991-23	IC SN74LS123NS, TTL; TI
IC43	8-759-900-02	IC SN74LS02N, TTL; TI
IC44	8-759-900-08	IC SN74LS08N, TTL; TI
IC45	8-759-900-74	IC SN74LS74AN, TTL; TI
IC46	8-759-900-00	IC SN74LS00N, TTL; TI
IC47	8-759-901-75	IC SN74LS175N, TTL; TI
IC48	8-759-900-02	IC SN74LS02N, TTL; TI
IC49	8-759-900-00	IC SN74LS00N, TTL; TI
IC50	8-759-900-08	IC SN74LS08N, TTL; TI
IC51	8-759-900-08	IC SN74LS08N, TTL; TI
IC52	8-759-900-74	IC SN74LS74AN, TTL; TI
IC53	8-759-900-74	IC SN74LS74AN, TTL; TI
IC54	8-759-942-59	IC SN74259N, TTL; TI

Ref. No.	Part No.	Description
IC55	8-759-900-08	IC SN74LS08N, TTL; TI
IC56	8-759-901-75	IC SN74LS175N, TTL; TI
IC57	8-759-900-74	IC SN74LS74AN, TTL; TI
IC58	8-759-991-23	IC SN74LS123NS, TTL; TI
IC59	8-759-900-14	IC SN74LS14N, TTL; TI
IC60	8-759-991-23	IC SN74LS123NS, TTL; TI
R15	1-224-943-00	RES, VAR, METAL 100K

SYS SW-4 BOARD

	A-6017-045-A	COMPLETE PCB, SYS SW-4
C2	1-161-034-00	CAP, CERAMIC 0.022 20% 25V
C3	1-131-371-00	CAP, TANTALUM 10 10% 16V
C4	1-131-371-00	CAP, TANTALUM 10 10% 16V
C5	1-131-371-00	CAP, TANTALUM 10 10% 16V
C6	1-131-371-00	CAP, TANTALUM 10 10% 16V
C8	1-161-026-00	CAP, CERAMIC 0.001 20% 25V
C9	1-131-380-00	CAP, TANTALUM 33 10% 10V
C10	1-102-114-00	CAP, CERAMIC 470PF 10% 50V
IC1	8-759-900-05	IC SN74LS05N, TTL; TI
IC2	8-759-901-51	IC SN74LS151N, TTL; TI
IC3	8-759-900-14	IC SN74LS14N, TTL; TI
IC4	8-759-902-59	IC SN74LS259N, TTL; TI
PL1 ~ 11	1-518-446-00	LAMP, 5V/75mA
Q1	8-729-177-43	TRANSISTOR 2SD774
Q2	8-729-177-43	TRANSISTOR 2SD774
Q3	8-729-177-43	TRANSISTOR 2SD774
Q4	8-729-177-43	TRANSISTOR 2SD774
Q5	8-729-177-43	TRANSISTOR 2SD774
Q6	8-729-177-43	TRANSISTOR 2SD774
Q7	8-729-177-43	TRANSISTOR 2SD774
Q8	8-729-177-43	TRANSISTOR 2SD774
Q9	8-729-177-43	TRANSISTOR 2SD774
Q10	8-729-177-43	TRANSISTOR 2SD774
Q11	8-729-177-43	TRANSISTOR 2SD774
Q12	8-729-177-43	TRANSISTOR 2SD774

Ref. No.	Part No.	Description
RB1	1-231-533-00	RESISTOR BLOCK, 10K x 4
RB2	1-231-509-00	RESISTOR BLOCK, 1K x 4
RB3	1-231-509-00	RESISTOR BLOCK, 1K x 4
RB4	1-231-509-00	RESISTOR BLOCK, 1K x 4
S1	1-552-905-00	SWITCH, PUSH
S2	1-552-905-00	SWITCH, PUSH
S3	1-552-905-00	SWITCH, PUSH
S4	1-552-905-00	SWITCH, PUSH
S5	1-552-905-00	SWITCH, PUSH
S6	1-552-905-00	SWITCH, PUSH
S7	1-552-905-00	SWITCH, PUSH
S8	1-552-905-00	SWITCH, PUSH
S9	1-552-905-00	SWITCH, PUSH
S10	1-552-905-00	SWITCH, PUSH
S11	1-552-905-00	SWITCH, PUSH
S12	1-552-380-00	SWITCH, KEY BOARD
S13	1-552-380-00	SWITCH, KEY BOARD
S14	1-552-380-00	SWITCH, KEY BOARD
S15	1-552-380-00	SWITCH, KEY BOARD

SYS SW-5 BOARD

	A-6017-046-B	COMPLETE PCB, SYS SW-5
C1	1-107-085-00	CAP, MICA 100PF 5% 50V
C2	1-107-085-00	CAP, MICA 100PF 5% 50V
C7	1-161-036-00	CAP, CERAMIC 0.047 20% 25V
C8	1-161-036-00	CAP, CERAMIC 0.047 20% 25V
C9	1-161-036-00	CAP, CERAMIC 0.047 20% 25V
C10	1-161-036-00	CAP, CERAMIC 0.047 20% 25V
CN451	1-508-951-00	SIDE TYPE RECEPTACLE, 10P, MALE

Ref. No.	Part No.	Description
IC1	8-759-240-25	IC TC4025BP, C-MOS (CD4025BE; RCA)
IC2	8-759-241-63	IC TC40163BP, C-MOS (MC14163BCP; MOTOROLA)
IC3	8-759-241-62	IC TC40162BP, C-MOS (MC14162BCP; MOTOROLA)
IC4	8-759-240-69	IC TC4069UBP, C-MOS (CD4069UBE; RCA)
IC5	8-759-240-11	IC TC4011BP, C-MOS (CD4011BE; RCA)
IC6	8-759-240-69	IC TC4069UBP, C-MOS (CD4069UBE; RCA)
IC7	8-759-240-27	IC TC4027BP, C-MOS (CD4027BE; RCA)
L1	1-407-165-XX	INDUCTOR MICRO 47
Q1	8-724-375-01	TRANSISTOR 2SC403C
R9	1-214-179-00	RES, METAL 91K 1% 1/4W
RB1	1-231-541-00	RESISTOR BLOCK, 22K x 4
RV1	1-224-941-00	RES, VAR, METAL 20K
SW1	1-552-508-00	SWITCH, DIP (2-CIRCUIT)

TAPE TIMER-A BOARD

Ref. No.	Part No.	Description
	A-6017-056-A	COMPLETE PCB, TAPE TIMER-A (NTSC, PM)
	A-6017-057-A	COMPLETE PCB, TAPE TIMER-A (PS)
C1	1-161-026-00	CAP, CERAMIC 0.001 20% 25V
C2	1-161-009-00	CAP, CERAMIC 0.0047 10% 25V
C3	1-161-026-00	CAP, CERAMIC 0.001 20% 25V
C4	1-161-026-00	CAP, CERAMIC 0.001 20% 25V
C5	1-161-026-00	CAP, CERAMIC 0.001 20% 25V
C6	1-161-032-00	CAP, CERAMIC 0.01 20% 25V
C7	1-161-026-00	CAP, CERAMIC 0.001 20% 25V
C8	1-161-032-00	CAP, CERAMIC 0.01 20% 25V
C9	1-131-359-00	CAP, TANTALUM 10 10% 25V
C10	1-131-402-00	CAP, TANTALUM 0.1 10% 35V
C11	1-131-359-00	CAP, TANTALUM 10 10% 25V
C12	1-131-408-00	CAP, TANTALUM 1 10% 35V (NTSC, PM)
C12	1-131-359-00	CAP, TANTALUM 10 10% 25V (PS)
C13	1-131-408-00	CAP, TANTALUM 1 10% 35V
C14	1-131-408-00	CAP, TANTALUM 1 10% 35V
C15	1-161-026-00	CAP, CERAMIC 0.001 20% 25V
C16	1-161-026-00	CAP, CERAMIC 0.001 20% 25V
C17	1-131-380-00	CAP, TANTALUM 33 10% 10V
C18	1-161-026-00	CAP, CERAMIC 0.001 20% 25V
C19	1-161-026-00	CAP, CERAMIC 0.001 20% 25V
C20	1-161-026-00	CAP, CERAMIC 0.001 20% 25V
C21	1-161-026-00	CAP, CERAMIC 0.001 20% 25V
C22	1-161-026-00	CAP, CERAMIC 0.001 20% 25V
C23	1-102-114-00	CAP, CERAMIC 470PF 10% 50V
C24	1-102-114-00	CAP, CERAMIC 470PF 10% 50V
C25	1-102-114-00	CAP, CERAMIC 470PF 10% 50V
C26	1-102-114-00	CAP, CERAMIC 470PF 10% 50V
C27	1-102-114-00	CAP, CERAMIC 470PF 10% 50V
C28	1-102-114-00	CAP, CERAMIC 470PF 10% 50V
C29	1-102-114-00	CAP, CERAMIC 470PF 10% 50V
C30	1-161-034-00	CAP, CERAMIC 0.022 20% 25V
C31	1-102-114-00	CAP, CERAMIC 470PF 10% 50V
C32	1-102-114-00	CAP, CERAMIC 470PF 10% 50V
C33	1-102-114-00	CAP, CERAMIC 470PF 10% 50V
C34	1-102-114-00	CAP, CERAMIC 470PF 10% 50V
C35	1-102-114-00	CAP, CERAMIC 470PF 10% 50V
C36	1-102-114-00	CAP, CERAMIC 470PF 10% 50V
C37	1-102-114-00	CAP, CERAMIC 470PF 10% 50V
C38	1-102-114-00	CAP, CERAMIC 470PF 10% 50V
C39	1-102-114-00	CAP, CERAMIC 470PF 10% 50V
C40	1-102-114-00	CAP, CERAMIC 470PF 10% 50V
C41	1-102-114-00	CAP, CERAMIC 470PF 10% 50V
C42	1-102-114-00	CAP, CERAMIC 470PF 10% 50V
C43	1-161-034-00	CAP, CERAMIC 0.022 20% 25V
C44	1-161-034-00	CAP, CERAMIC 0.022 20% 25V
C45	1-102-114-00	CAP, CERAMIC 470PF 10% 50V
C46	1-102-114-00	CAP, CERAMIC 470PF 10% 50V
C47	1-102-114-00	CAP, CERAMIC 470PF 10% 50V
C48	1-161-026-00	CAP, CERAMIC 0.001 20% 25V
C49	1-131-408-00	CAP, TANTALUM 1 10% 35V
C50	1-131-408-00	CAP, TANTALUM 1 10% 35V
C51	1-131-408-00	CAP, TANTALUM 1 10% 35V
C52	1-131-408-00	CAP, TANTALUM 1 10% 35V
C53	1-131-408-00	CAP, TANTALUM 1 10% 35V
C54	1-131-408-00	CAP, TANTALUM 1 10% 35V
C55	1-161-026-00	CAP, CERAMIC 0.001 20% 25V
C57	1-161-034-00	CAP, CERAMIC 0.022 20% 25V
C59	1-161-034-00	CAP, CERAMIC 0.022 20% 25V
C61	1-161-034-00	CAP, CERAMIC 0.022 20% 25V
C63	1-161-034-00	CAP, CERAMIC 0.022 20% 25V
C64	1-161-034-00	CAP, CERAMIC 0.022 20% 25V
C65	1-161-034-00	CAP, CERAMIC 0.022 20% 25V
C67	1-161-034-00	CAP, CERAMIC 0.022 20% 25V
C68	1-161-034-00	CAP, CERAMIC 0.022 20% 25V
C70	1-161-034-00	CAP, CERAMIC 0.022 20% 25V
C71	1-161-034-00	CAP, CERAMIC 0.022 20% 25V
C73	1-161-034-00	CAP, CERAMIC 0.022 20% 25V
C74	1-161-034-00	CAP, CERAMIC 0.022 20% 25V
C76	1-161-034-00	CAP, CERAMIC 0.022 20% 25V
C77	1-161-034-00	CAP, CERAMIC 0.022 20% 25V
C79	1-161-034-00	CAP, CERAMIC 0.022 20% 25V
C80	1-161-034-00	CAP, CERAMIC 0.022 20% 25V
C82	1-161-034-00	CAP, CERAMIC 0.022 20% 25V
C83	1-161-034-00	CAP, CERAMIC 0.022 20% 25V
C85	1-161-034-00	CAP, CERAMIC 0.022 20% 25V
C86	1-161-034-00	CAP, CERAMIC 0.022 20% 25V
C88	1-161-034-00	CAP, CERAMIC 0.022 20% 25V
C89	1-161-034-00	CAP, CERAMIC 0.022 20% 25V
C91	1-161-034-00	CAP, CERAMIC 0.022 20% 25V
C92	1-161-034-00	CAP, CERAMIC 0.022 20% 25V
C94	1-102-106-00	CAP, CERAMIC 100PF 10% 50V
C95	1-131-359-00	CAP, TANTALUM 10 10% 25V
C96	1-102-114-00	CAP, CERAMIC 470PF 10% 50V
C97	1-102-106-00	CAP, CERAMIC 100PF 10% 50V
C98	1-102-114-00	CAP, CERAMIC 470PF 10% 50V
D1	8-719-709-25	DIODE 1S1925P
D2	8-719-709-25	DIODE 1S1925P
D3	8-719-815-55	DIODE 1S1555
D4	8-719-815-55	DIODE 1S1555
D5	8-719-815-55	DIODE 1S1555

Ref. No.	Part No.	Description
IC1	8-759-900-14	IC SN74LS14N, TTL; TI
IC2	8-759-354-52	IC HD75452P (SN75452BP; TI)
IC3	8-759-991-23	IC SN74LS123NS, TTL; TI
IC4	8-759-941-75	IC SN74175N, TTL; TI
IC5	8-759-900-00	IC SN74LS00N, TTL; TI
IC6	8-759-900-74	IC SN74LS74AN, TTL; TI
IC7	8-759-901-07	IC 74LS107AN, TTL; TI
IC8	8-759-900-74	IC SN74LS74AN, TTL; TI
IC9	8-720-002-96	TRANSISTOR TX-429D
IC10	8-759-990-82	IC TL082CP; TI
IC11	8-759-750-60	IC MB7052-TAM4, PROM; FUJITSU
IC12	8-759-750-61	IC MB7052-TAM5, PROM; FUJITSU
IC13	8-759-900-14	IC SN74LS14N, TTL; TI
IC14	8-759-900-74	IC SN74LS74AN, TTL; TI
IC15	8-759-900-74	IC SN74LS74AN, TTL; TI
IC16	8-759-750-68	IC MB7052-TAMC, PROM; FUJITSU
IC17	8-759-900-04	IC SN74LS04N, TTL; TI
IC18	8-759-901-91	IC SN74LS191N, TTL; TI
IC19	8-759-900-04	IC SN74LS04N, TTL; TI
IC20	8-759-750-62	IC MB7052-TAM6, PROM; FUJITSU
IC21	8-759-750-63	IC MB7052-TAM7, PROM; FUJITSU
IC22	8-759-901-61	IC SN74LS161AN, TTL; TI
IC23	8-759-900-86	IC SN74LS86N, TTL; TI
IC24	8-759-974-74	IC SN7474N, TTL; TI
IC25	8-759-900-10	IC SN74LS10N, TTL: TI
IC26	8-759-974-07	IC SN7407N, TTL; TI
IC27	8-759-974-89	IC SN7489N, TTL; TI
IC28	8-759-753-22	IC MB7056-TAME, PROM; FUJITSU
IC29	8-759-753-23	IC MB7052-TAMF, PROM; FUJITSU
IC30	8-759-900-74	IC SN74LS74AN, TTL; TI
IC31	8-759-900-74	IC SN74LS74AN, TTL: TI
IC32	8-759-901-57	IC SN74LS157N, TTL; TI
IC33	8-759-974-89	IC SN7489N, TTL; TI
IC34	8-759-900-00	IC SN74LS00N, TTL; TI
IC35	8-759-753-24	IC MB7052-TAMG, PROM; FUJITSU
IC36	8-759-750-65	IC MB7052-TAM9, PROM; FUJITSU
IC37	8-759-900-86	IC SN74LS86N, TTL; TI
IC38	8-759-902-83	IC SN74LS283N, TTL; TI
IC39	8-759-956-02	IC IM5600-TAM2, PROM; INTERSIL
IC40	8-759-901-07	IC SN74LS107AN, TTL; TI
IC41	8-759-753-25	IC MB7052-TAMH; PROM; FUJITSU
IC42	8-759-750-66	IC MB7052-TAMA, PROM; FUJITSU
IC43	8-759-901-53	IC SN74LS153N, TTL; TI
IC44	8-759-956-03	IC IM5600-TAM3, PROM; INTERSIL
IC45	8-759-900-04	IC SN74LS04N, TTL; TI
IC46	8-759-941-61	IC SN74161N, TTL; TI
IC47	8-759-900-04	IC SN74LS04N, TTL; TI
IC48	8-759-991-23	IC SN74LS123NS, TTL; TI
IC49	8-759-991-23	IC SN74LS123NS, TTL; TI
IC50	8-759-991-23	IC SN74LS123NS, TTL; TI

Ref. No.	Part No.	Description
L1	1-409-339-00	COIL, TOROIDAL
Q1	8-724-375-01	TRANSISTOR 2SC403C
Q2	8-729-612-77	TRANSISTOR 2SA1027R
Q3	8-724-375-01	TRANSISTOR 2SC403C
RB1	1-231-450-00	RESISTOR BLOCK, 3.3K x 8
RB2	1-231-450-00	RESISTOR BLOCK, 3.3K x 8
RB3	1-231-521-00	RESISTOR BLOCK, 3.3K x 4
RB4	1-231-521-00	RESISTOR BLOCK, 3.3K x 4
RB5	1-231-450-00	RESISTOR BLOCK, 3.3K x 8
RV1	1-224-940-00	RES, VAR, METAL 10K
SW1	1-552-101-00	SWITCH, SLIDE

TC BOARD

	1-585-531-00	PC BOARD, TC
CN107M	1-508-743-00	TOP TYPE RECEPTACLE, 5P, MALE
T2	1-425-944-00	TRANSFORMER, TENSION DET.

TENSION-A BOARD

Ref. No.	part No.	Description
	A-6015-056-A	COMPLETE PCB, TENSION-A (NSTC, PM)
	A-6015-057-A	COMPLETE PCB, TENSION-A (PS)
C10	1-131-406-00	CAP, TANTALUM 0.47 10% 35V
C11	1-131-406-00	CAP, TANTALUM 0.47 10% 35V
C12	1-131-406-00	CAP, TANTALUM 0.47 10% 35V
C13	1-131-406-00	CAP, TANTALUM 0.47 10% 35V
C14	1-131-402-00	CAP, TANTALUM 0.1 10% 35V
C15	1-131-402-00	CAP, TANTALUM 0.1 10% 35V
C16	1-131-240-00	CAP, TANTALUM 47 20% 16V
C17	1-131-240-00	CAP, TANTALUM 47 20% 16V
C18	1-109-527-00	CAP, MICA 47PF 5% 100V
C19	1-109-602-00	CAP, MICA 0.001 5% 100V
C20	1-107-078-00	CAP, MICA 51PF 5% 50V (NTSC, PM)
C20	1-107-086-00	CAP, MICA 110PF 5% 50V (PS)
C21	1-109-602-00	CAP, MICA 0.001 1% 100V
C23	1-131-372-00	CAP, TANTALUM 15 10% 16V
C25	1-131-406-00	CAP, TANTALUM 0.47 10% 35V
C27	1-131-349-00	CAP, TANTALUM 2.2 10% 35V
C33	1-102-114-00	CAP, CERAMIC 470PF 10% 50V
C34	1-102-114-00	CAP, CERAMIC 470PF 10% 50V
C35	1-102-114-00	CAP, CERAMIC 470PF 10% 50V
C36	1-102-114-00	CAP, CERAMIC 470PF 10% 50V
C38	1-109-542-00	CAP, MICA 220PF 5% 100V
C39	1-109-559-00	CAP, MICA 820PF 5% 100V
C40	1-109-535-00	CAP, MICA 100PF 5% 100V
C41	1-109-527-00	CAP, MICA 47PF 5% 100V
C42	1-109-557-00	CAP, MICA 680PF 5% 100V
C43	1-109-557-00	CAP, MICA 680PF 5% 100V
C48	1-109-527-00	CAP, MICA 47PF 5% 100V
C50	1-105-691-00	CAP, MYLAR 0.33 10% 50V
C51	1-105-691-00	CAP, MYLAR 0.33 10% 50V
C52	1-105-691-00	CAP, MYLAR 0.33 10% 50V
C60	1-109-535-00	CAP, MICA 100PF 5% 100V
C63	1-109-542-00	CAP, MICA 220PF 5% 100V
C64	1-109-553-00	CAP, MICA 470PF 5% 100V
C65	1-109-542-00	CAP, MICA 220PF 5% 100V
C66	1-109-553-00	CAP, MICA 470PF 5% 100V
C67	1-109-542-00	CAP, MICA 220PF 5% 100V
C68	1-109-553-00	CAP, MICA 470PF 5% 100V
C69	1-109-542-00	CAP, MICA 220PF 5% 100V
C70	1-109-553-00	CAP, MICA 470PF 5% 100V
C75	1-109-542-00	CAP, MICA 220PF 5% 100V
C76	1-109-553-00	CAP, MICA 470PF 5% 100V
C77	1-109-542-00	CAP, MICA 220PF 5% 100V
C78	1-109-553-00	CAP, MICA 470PF 5% 100V
C79	1-109-542-00	CAP, MICA 220PF 5% 100V
C80	1-109-553-00	CAP, MICA 470PF 5% 100V
C81	1-109-542-00	CAP, MICA 220PF 5% 100V
C82	1-109-553-00	CAP, MICA 470PF 5% 100V
C98	1-101-005-00	CAP, CERAMIC 0.022 50V
C99	1-101-005-00	CAP, CERAMIC 0.022 50V
C100	1-101-005-00	CAP, CERAMIC 0.022 50V
C101	1-101-005-00	CAP, CERAMIC 0.022 50V
C102	1-101-005-00	CAP, CERAMIC 0.022 50V
C103	1-131-349-00	CAP, TANTALUM 2.2 10% 35V
C104	1-109-535-00	CAP, MICA 100PF 5% 100V
C105	1-109-535-00	CAP, MICA 100PF 5% 100V
C109	1-109-602-00	CAP, MICA 0.001 1% 100V
C111	1-131-372-00	CAP, TANTALUM 15 10% 16V
C113	1-131-372-00	CAP, TANTALUM 15 10% 16V
C114	1-131-349-00	CAP, TANTALUM 2.2 10% 35V
C115	1-131-349-00	CAP, TANTALUM 2.2 10% 35V
C116	1-161-043-00	CAP, CERAMIC 0.0022 10% 50V
D1	8-719-815-55	DIODE 1S1555
D2	8-719-815-55	DIODE 1S1555
D3	8-719-815-55	DIODE 1S1555
D4	8-719-815-55	DIODE 1S1555
D5	8-719-815-55	DIODE 1S1555
D6	8-719-800-01	DIODE 1S1555-SS1
D7	8-719-800-01	DIODE 1S1555-SS1
D8	8-719-815-59	DIODE 1S1555S
D9	8-719-815-59	DIODE 1S1555S
D10	8-719-139-07	DIODE RD3.9E-B
D11	8-719-815-55	DIODE 1S1555
D15	8-719-139-07	DIODE RD3.9E-B
D16	8-719-815-55	DIODE 1S1555
D17	8-719-139-07	DIODE RD3.9E-B
D18	8-719-139-07	DIODE RD3.9E-B
D19	8-719-815-55	DIODE 1S1555
D20	8-719-815-55	DIODE 1S1555
D21	8-719-815-55	DIODE 1S1555
D22	8-719-815-55	DIODE 1S1555
D23	8-719-815-55	DIODE 1S1555
D24	8-719-815-55	DIODE 1S1555
D25	8-719-110-07	DIODE RD10E-B
D26	8-719-815-55	DIODE 1S1555
D27	8-719-815-55	DIODE 1S1555
D28	8-719-815-55	DIODE 1S1555
D29	8-719-815-55	DIODE 1S1555
D30	8-719-815-55	DIODE 1S1555
D31	8-719-815-55	DIODE 1S1555
D32	8-719-815-55	DIODE 1S1555
D33	8-719-815-55	DIODE 1S1555
D34	8-719-815-55	DIODE 1S1555
D35	8-719-815-55	DIODE 1S1555
D36	8-719-815-55	DIODE 1S1555
D37	8-719-110-07	DIODE RD10E-B

Ref. No.	Part No.	Description
IC1	8-759-240-01	IC TC4001BP, C-MOS (CD4001BE; RCA)
IC2	8-759-345-38	IC HD14538BP, C-MOS; HITACHI
IC3	8-759-345-38	IC HD14538BP, C-MOS; HITACHI
IC4	8-759-900-14	IC SN74LS14N, TTL; TI
IC5	8-759-903-93	IC SN74LS393N, TTL; TI
IC6	8-759-753-20	IC MB7054-T6CA, PROM; FUJITSU
IC7	8-759-753-21	IC MB7054-T7CA, PROM; FUJITSU
IC8	8-759-753-20	IC MB7054-T6CA, PROM; FUJITSU
IC9	8-759-753-21	IC MB7054-T7CA, PROM; FUJITSU
IC10	8-759-250-20	IC TC5020BP; TOSHIBA
IC11	8-759-240-49	IC TC4049BP, C-MOS (CD4049BE; RCA)
IC12	8-759-753-19	IC MB7052-T2CA, PROM; FUJITSU
IC13	8-759-345-38	IC HD14538BP, C-MOS; HITACHI
IC14	8-759-900-03	IC SN74LS03N, TTL; TI
IC15	8-759-632-04	IC M53204P, TTL (SN7404N; TI)
IC16	8-759-906-69	IC SN74LS669N, TTL; TI
IC17	8-759-906-69	IC SN74LS669N, TTL; TI
IC18	8-759-906-69	IC SN74LS669N, TTL; TI
IC19	8-759-906-69	IC SN74LS669N, TTL; TI
IC20	8-759-140-53	IC μPD4053BC, C-MOS; NEC
IC21	8-759-921-91	IC TL191CN, TI
IC22	8-759-990-82	IC TL082CP, TI
IC23	8-759-990-82	IC TL082CP, TI
IC24	8-759-377-43	IC HA17741GS (μA741TC; FSC)
IC25	8-759-903-08	IC LM308H, NSC
IC26	8-759-990-82	IC TL082CP, TI
IC27	8-759-980-38	IC ICL8038BCPD; INTERSIL
IC28	8-759-145-57	IC μPC4557C, NEC
IC30	8-759-140-53	IC μPD4053BC, C-MOS; NEC
IC31	8-759-140-53	IC μPD4053BC, C-MOS; NEC
IC32	8-759-133-90	IC μPC339C (LM339; NSC)
IC33	8-759-240-44	IC TC4044BP, C-MOS (CD4044BE; RCA)
IC34	8-759-045-84	IC MC14584BCP; MOTOROLA
IC35	8-759-045-84	IC MC14584BCP; MOTOROLA
IC35	8-759-240-69	IC TC4069UBP, C-MOS (CD4069UBE; RCA)
IC36	8-759-240-44	IC TC4044BP, C-MOS (CD4044BE; RCA)
IC37	8-759-133-90	IC μPC339C (LM339; NSC)
IC38	8-759-140-53	IC μPD4053BC, C-MOS; NEC
IC39	8-759-345-38	IC HD14538BP, C-MOS; HITACHI
IC40	8-759-345-38	IC HD14538BP, C-MOS; HITACHI
IC41	8-759-250-20	IC TC5020BP; TOSHIBA
IC42	8-759-990-82	IC TL082CP, TI
IC43	8-759-140-53	IC μPD4053BC, C-MOS; NEC
IC44	8-759-345-38	IC HD14538BP, C-MOS; HITACHI
IC45	8-759-990-82	IC TL082CP, TI
IC46	8-759-901-32	IC SN74LS132N, TTL; TI
IC47	8-759-990-82	IC TL082CP, TI
IC48	8-759-900-01	IC VFQ-1C; DATEL
L1	1-409-309-00	COIL, TOROIDAL
Q1	8-723-302-00	TRANSISTOR 2SK43-2
Q2	8-723-302-00	TRANSISTOR 2SK43-2
Q3	8-729-368-90	TRANSISTOR 2SC689H
Q4	8-729-368-90	TRANSISTOR 2SC689H
Q5	8-729-663-47	TRANSISTOR 2SC1364
Q6	8-729-663-47	TRANSISTOR 2SC1364
Q7	8-729-384-48	TRANSISTOR 2SA844
Q8	8-729-384-48	TRANSISTOR 2SA844
Q9	8-723-302-00	TRANSISTOR 2SK43-2
Q10	8-729-663-47	TRANSISTOR 2SC1364
Q11	8-723-302-00	TRANSISTOR 2SK43-2
Q12	8-723-302-00	TRANSISTOR 2SK43-2
Q13	8-723-302-00	TRANSISTOR 2SK43-2
Q14	8-723-302-00	TRANSISTOR 2SK43-2
Q15	8-729-384-48	TRANSISTOR 2SA844
Q16	8-729-384-48	TRANSISTOR 2SA844
Q17	8-729-384-48	TRANSISTOR 2SA844
Q18	8-761-622-00	TRANSISTOR 2SC1636
Q19	8-724-375-01	TRANSISTOR 2SC403C
R2	1-214-136-00	RES, METAL 1.5K 1% 1/4W
R3	1-214-136-00	RES, METAL 1.5K 1% 1/4W
R8	1-214-136-00	RES, METAL 1.5K 1% 1/4W
R9	1-214-136-00	RES, METAL 1.5K 1% 1/4W
R11	1-214-178-00	RES, METAL 82K 1% 1/4W
R12	1-214-156-00	RES, METAL 10K 1% 1/4W
R13	1-214-156-00	RES, METAL 10K 1% 1/4W
R22	1-214-173-00	RES, METAL 51K 1% 1/4W
R24	1-214-180-00	RES, METAL 100K 1% 1/4W
R25	1-214-156-00	RES, METAL 10K 1% 1/4W
R26	1-214-180-00	RES, METAL 100K 1% 1/4W
R27	1-214-156-00	RES, METAL 10K 1% 1/4W
R28	1-214-148-00	RES, METAL 4.7K 1% 1/4W
R31	1-214-132-00	RES, METAL 1K 1% 1/4W
R32	1-214-132-00	RES, METAL 1K 1% 1/4W
R33	1-214-132-00	RES, METAL 1K 1% 1/4W
R34	1-214-132-00	RES, METAL 1K 1% 1/4W
R35	1-214-141-00	RES, METAL 2.4K 1% 1/4W

Ref. No.	Part No.	Description
R36	1-214-143-00	RES, METAL 3K 1% 1/4W
R37	1-214-160-00	RES, METAL 15K 1% 1/4W
R38	1-214-135-00	RES, METAL 1.3K 1% 1/4W
R38	1-214-158-00	RES, METAL 12K 1% 1/4W
R38	1-214-137-00	RES, METAL 1.6K 1% 1/4W (PS ONLY)
R38	1-214-138-00	RES, METAL 1.8K 1% 1/4W
R39	1-214-143-00	RES, METAL 3K 1% 1/4W
R40	1-214-120-00	RES, METAL 330 1% 1/4W
R41	1-214-171-00	RES, METAL 43K 1% 1/4W
R42	1-214-180-00	RES, METAL 100K 1% 1/4W
R57	1-214-136-00	RES, METAL 1.5K 1% 1/4W
R58	1-214-132-00	RES, METAL 1K 1% 1/4W
R59	1-214-132-00	RES, METAL 1K 1% 1/4W
R60	1-214-136-00	RES, METAL 1.5K 1% 1/4W
R61	1-214-132-00	RES, METAL 1K 1% 1/4W
R62	1-214-136-00	RES, METAL 1.5K 1% 1/4W
R63	1-214-125-00	RES, METAL 510 1% 1/4W
R64	1-214-136-00	RES, METAL 1.5K 1% 1/4W
R74	1-214-132-00	RES, METAL 1K 1% 1/4W
R79	1-214-164-00	RES, METAL 22K 1% 1/4W
R82	1-214-142-00	RES, METAL 2.7K 1% 1/4W
R95	1-214-474-00	RES, METAL 4.7M 5% 1/4W
R102	1-214-161-00	RES, METAL 16K 1% 1/4W
R103	1-214-161-00	RES, METAL 16K 1% 1/4W
R104	1-214-161-00	RES, METAL 16K 1% 1/4W
R112	1-214-173-00	RES, METAL 51K 1% 1/4W
R113	1-214-173-00	RES, METAL 51K 1% 1/4W
R115	1-214-173-00	RES, METAL 51K 1% 1/4W
R121	1-214-167-00	RES, METAL 30K 1% 1/4W
R125	1-214-147-00	RES, METAL 4.3K 1% 1/4W
R126	1-214-150-00	RES, METAL 5.6K 1% 1/4W
R128	1-214-180-00	RES, METAL 100K 1% 1/4W
R130	1-214-148-00	RES, METAL 4.7K 1% 1/4W
R131	1-214-180-00	RES, METAL 100K 1% 1/4W
R132	1-214-163-00	RES, METAL 20K 1% 1/4W
R133	1-214-167-00	RES, METAL 30K 1% 1/4W
R134	1-214-175-00	RES, METAL 62K 1% 1/4W
R135	1-214-172-00	RES, METAL 47K 1% 1/4W
RB1	1-231-385-00	RESISTOR BLOCK, 4.7K x 8
RB2	1-231-567-00	RESISTOR BLOCK, 10K x 2
RB3	1-231-567-00	RESISTOR BLOCK, 10K x 2
RB4	1-231-663-00	RESISTOR BLOCK, 200K x 2
RB5	1-231-405-00	RESISTOR BLOCK, 1K x 8
RB6	1-235-004-00	RESISTOR BLOCK, 100K x 4
RB7	1-235-005-00	RESISTOR BLOCK, 47K x 8
RB8	1-235-005-00	RESISTOR BLOCK, 47K x 8
RB9	1-235-004-00	RESISTOR BLOCK, 100K x 4

Ref. No.	Part No.	Description
RV1	1-224-955-00	RES, VAR, CARBON (WITH SW)
RV2	1-224-937-00	RES, VAR, METAL 1K
RV3	1-224-937-00	RES, VAR, METAL 1K
RV4	1-224-941-00	RES, VAR, METAL 20K
RV5	1-224-941-00	RES, VAR, METAL 20K
RV6	1-224-938-00	RES, VAR, METAL 2K
RV7	1-228-110-00	RES, VAR, METAL 2K
RV8	1-224-937-00	RES, VAR, METAL 1K
RV9	1-224-937-00	RES, VAR, METAL 1K
RV10	1-224-937-00	RES, VAR, METAL 1K
RV11	1-224-937-00	RES, VAR, METAL 1K
RV12	1-224-941-00	RES, VAR, METAL 20K
RV13	1-224-936-00	RES, VAR, METAL 500
RV14	1-224-942-00	RES, VAR, METAL 50K
RV15	1-224-936-00	RES, VAR, METAL 500

VIDEO LOGIC BOARD

A-6017-038-C	COMPLETE PCB, VIDEO LOGIC (NTSC, PM)
A-6017-039-C	COMPLETE PCB, VIDEO LOGIC(PS)

C1	1-107-089-00	CAP, MICA 150PF 5% 50V
C3	1-131-371-00	CAP, TANTALUM 10 10% 16V
C7	1-107-085-00	CAP, MICA 100PF 5% 50V
C9	1-107-089-00	CAP, MICA 150PF 5% 50V
C16	1-161-036-00	CAP, CERAMIC 0.047 20% 25V
C18	1-131-402-00	CAP, TANTALUM 0.1 10% 35V
C19	1-161-036-00	CAP, CERAMIC 0.047 20% 25V
C20	1-161-036-00	CAP, CERAMIC 0.047 20% 25V
C23	1-161-036-00	CAP, CERAMIC 0.047 20% 25V
C25	1-161-036-00	CAP, CERAMIC 0.047 20% 25V
C27	1-161-036-00	CAP, CERAMIC 0.047 20% 25V
C29	1-161-036-00	CAP, CERAMIC 0.047 20% 25V
C31	1-161-036-00	CAP, CERAMIC 0.047 20% 25V
C33	1-161-036-00	CAP, CERAMIC 0.047 20% 25V
C34	1-161-036-00	CAP, CERAMIC 0.047 20% 25V
C36	1-161-036-00	CAP, CERAMIC 0.047 20% 25V
C38	1-161-036-00	CAP, CERAMIC 0.047 20% 25V
C40	1-161-036-00	CAP, CERAMIC 0.047 20% 25V
C42	1-161-036-00	CAP, CERAMIC 0.047 20% 25V
C44	1-161-036-00	CAP, CERAMIC 0.047 20% 25V

Ref. No.	Part No.	Description
C45	1-161-036-00	CAP, CERAMIC 0.047 20% 25V
C46	1-161-036-00	CAP, CERAMIC 0.047 20% 25V
D1	8-719-709-25	DIODE 1S1925P
IC1	8-759-900-14	IC SN74LS14N, TTL; TI
IC2	8-759-901-07	IC SN74LS107AN, TTL; TI
IC3	8-759-902-21	IC SN74LS221N, TTL: TI
IC4	8-759-974-05	IC SN7405N, TTL; TI
IC5	8-759-900-00	IC SN74LS00N, TTL; TI
IC6	8-759-900-04	IC SN74LS04N, TTL; TI
IC7	8-759-991-23	IC SN74LS123NS, TTL; TI
IC8	8-759-900-15	IC SN74LS15N, TTL; TI
IC9	8-759-900-32	IC SN74LS32N, TTL; TI
IC10	8-759-900-27	IC SN74LS27N, TTL; TI
IC11	8-759-900-08	IC SN74LS08N, TTL; TI
IC12	8-759-900-74	IC SN74LS74AN, TTL; TI
IC13	8-759-900-74	IC SN74LS74AN, TTL; TI
IC14	8-759-900-74	IC SN74LS74AN, TTL; TI
IC15	8-759-900-38	IC SN74LS38N, TTL; TI
IC16	8-759-900-00	IC SN74LS00N, TTL; TI
IC17	8-759-900-74	IC SN74LS74AN, TTL; TI
IC18	8-759-900-32	IC SN74LS32N, TTL; TI
IC19	8-759-900-74	IC SN74LS74AN, TTL; TI
IC20	8-759-902-73	IC SN74LS273N, TTL; TI
IC21	8-759-900-00	IC SN74LS00N, TTL; TI
IC22	8-759-900-08	IC SN74LS08N, TTL; TI
IC23	8-759-900-02	IC SN74LS02N, TTL; TI
IC24	8-759-901-07	IC SN74LS107AN, TTL; TI
IC25	8-759-901-91	IC SN74LS191N, TTL; TI
IC26	8-759-750-53	IC MB7051-V651, PROM; FUJITSU
IC26	8-759-750-57	IC MB7051-V661, PROM; FUJITSU
IC27	8-759-900-27	IC SN74LS27N, TTL; TI
IC28	8-759-900-00	IC SN74LS00N, TTL; TI
IC29	8-759-900-05	IC SN74LS05N, TTL; TI
IC30	8-759-900-04	IC SN74LS04N, TTL; TI
IC31	8-759-941-91	IC SN74191N, TTL; TI
IC32	8-759-750-54	IC MB7051-V251, PROM; FUJITSU
IC32	8-759-750-58	IC MB7051-V261, PROM; FUJITSU
IC33	8-759-900-86	IC SN74LS86N, TTL; TI
IC34	8-759-900-04	IC SN74LS04N, TTL: TI
IC35	8-759-900-08	IC SN74LS08N, TTL; TI
IC36	8-759-900-02	IC SN74LS02N, TTL; TI
IC37	8-759-941-91	IC SN74191N, TTL; TI
IC38	8-759-750-55	IC MB7052-V851, PROM; FUJITSU
IC38	8-759-750-59	IC MB7051-V861, PROM; FUJITSU
IC39	8-759-900-10	IC SN74LS10N, TTL; TI
IC40	8-759-900-00	IC SN74LS00N, TTL; TI
IC41	8-759-900-00	IC SN74LS00N, TTL; TI
IC42	8-759-900-32	IC SN74LS32N, TTL; TI
IC43	8-759-632-06	IC M53206P, TTL (SN7406N; TI)

Ref. No.	Part No.	Description
IC44	8-759-902-73	IC SN74LS273N, TTL; TI
IC45	8-759-900-32	IC SN74LS32N, TTL; TI
IC46	8-759-900-08	IC SN74LS08N, TTL; TI
IC47	8-759-902-21	IC SN74LS221N, TTL; TI
IC48	8-759-900-74	IC SN74LS74AN, TTL; TI
L1	1-409-339-00	COIL, TOROIDAL
Q1	8-729-364-12	TRANSISTOR 2SC641K
Q2	8-729-663-47	TRANSISTOR 2SC1364
Q3	8-729-663-47	TRANSISTOR 2SC1364
Q4	8-729-612-77	TRANSISTOR 2SA1027R
R8	1-224-937-00	RES, VAR, METAL 1K
R11	1-224-941-00	RES, VAR, METAL 20K
R13	1-224-940-00	RES, VAR, METAL 10K
RB1	1-231-497-00	RESISTOR BLOCK, 330 x 4
RB2	1-231-405-00	RESISTOR BLOCK, 1K x 8
RB3	1-231-533-00	RESISTOR BLOCK, 10K x 4
SW1	1-552-096-00	SWITCH, SLIDE
SW2	1-516-923-21	SWITCH, DIP, 4-CKT

WFM SELECT BOARD

	A-6025-024-B	COMPLETE PCB, WFM SELECT (U/C•PM•PS)
	A-6025-028-B	COMPLETE PCB, WFM SELECT (JAPAN)
CN390	1-508-736-21	SIDE TYPE RECEPTACLE, 10P, MALE
CN391	1-508-735-00	SIDE TYPE RECEPTACLE, 5P, MALE
SW1	1-552-069-00	SWITCH, PUSH
SW2	1-508-845-00	TOP TYPE RECEPTACLE, 6P, MALE
SW3	1-508-845-00	TOP TYPE RECEPTACLE, 6P, MALE

Ref. No.	Part No.	Description
FRAME		
	1-413-058-00	SWITCHING REGULATOR
	1-454-161-00	ELECTRO MAGNETIC CLUTCH
	⚠1-464-072-00	NOISE FILTER
	1-509-437-00	TRANSISTOR SOCKET
	1-536-455-12	16P TERMINAL
	⚠1-561-608-00	VOLTAGE SELECTOR
C1	1-125-237-00	CAP, ELECT 4700 160V
C2	1-125-237-00	CAP, ELECT 4700 160V
C3	1-125-147-00	CAP, ELECT 22,000 25V
C4	1-125-147-00	CAP, ELECT 22,000 25V
C5	1-125-148-00	CAP, ELECT 10,000 25V
C6	1-125-149-00	CAP, ELECT 22,000 16V
C7	1-125-149-00	CAP, ELECT 22,000 16V
C8	1-125-149-00	CAP, ELECT 22,000 16V
C9	1-130-654-00	CAP, MP 8.5/3.5 450V
C10	1-130-654-00	CAP, MP 8.5/3.5 450V
C11	1-108-747-00	CAP, MYLAR 0.1 125V
C12	1-123-557-00	CAP, ELECT 47 350V
C13	1-123-557-00	CAP, ELECT 47 350V
⚠C14	1-115-148-00	CAP, PAPER 0.01 450V
⚠CB1	1-532-494-00	CIRCUIT BREAKER
CN1	1-507-477-XX	JACK; HEADPHONE, FEMALE
CN2	1-507-477-XX	JACK; HEADPHONE, FEMALE
CN3	1-508-382-00	RECEPTACLE, 10P, FEMALE
CN4	1-509-329-00	RECEPTACLE, 10P, MALE
⚠CN5	1-560-222-11	INLET, AC (U/C, PS, PM)
	1-509-801-00	INLET, AC (JAPAN)

Ref. No.	Part No.	Description
CN11,12,17, 18,21,22, 23,24,25, 26,28,29, 30	1-509-940-00	RECEPTACLE BNC
CN31,32,33	1-509-184-00	RECEPTACLE XLR, 3P, FEMALE (U/C, PS, PM)
	1-509-176-00	RECEPTACLE XLR, 3P, MALE (JAPAN)
CN34,35,36	1-509-176-00	RECEPTACLE XLR, 3P, MALE (U/C, PS, PM)
	1-509-184-00	RECEPTACLE XLR, 3P, FEMALE (JAPAN)
CN37	1-509-940-00	RECEPTACLE BNC
CN38	1-509-176-00	RECEPTACLE XLR, 3P, MALE (U/C, PS, PM)
	1-509-184-00	RECEPTACLE XLR, 3P, FEMALE (JAPAN)
CN39	1-509-471-00	RECEPTACLE, 18P, FEMALE
CN40	1-509-176-00	RECEPTACLE XLR, 3P, MALE (PS-A4)
CN41	1-509-184-00	RECEPTACLE XLR, 3P, FEMALE (PS-A4)
⚠CN101M	1-561-071-00	PLUG HOUSING, 6P
	1-535-206-00	CONTACT, MALE
CN101F	1-561-085-00	PLUG HOUSING, 6P
	1-561-068-00	CONTACT, FEMALE
CN102M	1-561-072-00	PLUG HOUSING, 9P
	1-535-206-00	CONTACT, MALE
CN102F	1-561-086-00	PLUG HOUSING, 9P
	1-561-068-00	CONTACT, FEMALE
CN103M	1-561-073-00	PLUG HOUSING, 15P
	1-535-206-00	CONTACT, MALE
CN103F	1-561-087-00	PLUG HOUSING, 15P
	1-561-068-00	CONTACT, FEMALE
CN104M	1-508-960-00	PLUG HOUSING, 12P
	1-508-958-00	CONTACT, MALE
CN104F	1-561-078-00	PLUG HOUSING, 12P
	1-561-066-00	CONTACT, FEMALE
CN105M	1-508-680-00	PLUG HOUSING, 6P
	1-535-071-00	CONTACT, MALE
CN105F	1-508-683-00	RECEPTACLE HOUSING, 6P
	1-535-072-00	CONTACT, FEMALE
CN106M	1-508-680-00	PLUG HOUSING, 6P
	1-535-070-00	CONTACT, MALE
CN106F	1-508-683-00	RECEPTACLE HOUSING, 6P
	1-535-072-00	CONTACT, FEMALE
CN107	1-561-149-00	PLUG HOUSING, 5P, FEMALE
	1-535-243-00	CONTACT, FEMALE
CN108M	1-561-069-00	PLUG HOUSING, 2P
	1-535-206-00	CONTACT, MALE
CN108F	1-561-083-00	PLUG HOUSING, 2P
	1-561-068-00	CONTACT, FEMALE
CN111	1-561-147-00	PLUG HOUSING, 3P, FEMALE
	1-535-243-00	CONTACT, FEMALE
CN112	1-561-085-00	PLUG HOUSING, 4P, FEMALE
	1-561-068-00	CONTACT, FEMALE

Ref. No.	Part No.	Description
CN122	1-509-985-00	PLUG HOUSING, 4P, FEMALE
	1-509-982-00	CONTACT, FEMALE
CN201	1-561-071-00	PLUG HOUSING, 6P, MALE
	1-535-206-00	CONTACT
CN202,204	1-561-070-00	PLUG HOUSING, 4P, MALE
	1-535-206-00	CONTACT,
CN205	1-509-985-00	PLUG HOUSING, 4P, FEMALE
	1-509-982-00	CONTACT, FEMALE
CN206	1-561-147-00	PLUG HOUSING, 3P, FEMALE
	1-535-243-00	CONTACT, FEMALE
CN207	1-561-070-00	PLUG HOUSING, 4P, MALE
	1-561-067-00	PLUG CONTACT
CN208	1-561-071-00	PLUG HOUSING, 6P, MALE
	1-561-067-00	PLUG CONTACT
CN211	1-561-075-00	PLUG HOUSING, 6P, FEMALE
	1-508-965-00	PLUG CONTACT
CN212	1-561-318-00	PLUG HOUSING, 2P, MALE
	1-508-965-00	PLUG CONTACT
CN213,214	1-561-074-00	PLUG HOUSING, 3P, FEMALE
	1-508-965-00	PLUG CONTACT
CN215	1-561-075-00	PLUG HOUSING, 6P, FEMALE
	1-508-965-00	PLUG CONTACT
CN216	1-561-074-00	PLUG HOUSING, 3P, FEMALE
	1-508-965-00	PLUG CONTACT
CN217	1-561-075-00	PLUG HOUSING, 6P, FEMALE
	1-508-965-00	PLUG CONTACT
CN218	1-561-150-00	PLUG HOUSING, 6P, FEMALE
	1-535-243-00	CONTACT, FEMALE
CN219,220, 221	1-561-152-00	PLUG HOUSING, 10P, FEMALE
	1-535-243-00	CONTACT, FEMALE
CN222	1-509-984-00	PLUG HOUSING, 3P, FEMALE
	1-509-982-00	CONTACT, FEMALE
CN231,232	1-509-724-00	PLUG HOUSING, 2P, FEMALE
	1-535-100-00	CONTACT, FEMALE
CN233	1-561-071-00	PLUG HOUSING, 6P, MALE
	1-561-067-00	PLUG CONTACT
CN234	1-561-076-00	PLUG HOUSING, 9P, FEMALE
	1-508-965-00	PLUG CONTACT
CN235	1-561-074-00	PLUG HOUSING, 3P, FEMALE
	1-508-965-00	PLUG CONTACT
CN236	1-561-076-00	PLUG HOUSING, 9P, FEMALE
	1-508-965-00	PLUG CONTACT
CN237	1-509-704-00	PLUG HOUSING, 6P, FEMALE
	1-535-100-00	CONTACT, FEMALE
CN238,239	1-561-150-00	PLUG HOUSING, 6P, FEMALE
	1-535-243-00	CONTACT, FEMALE
CN251	1-509-986-00	PLUG HOUSING, 5P, FEMALE
	1-509-982-00	CONTACT FEMALE
CN252	1-509-989-00	PLUG HOUSING, 10P, FEMALE
	1-509-982-00	CONTACT, FEMALE

Ref. No.	Part No.	Description
CN261,262	1-509-986-00	PLUG HOUSING, 5P, FEMALE
	1-509-982-00	CONTACT, FEMALE
CN263,264	1-509-984-00	PLUG HOUSING, 3P, FEMALE
	1-509-982-00	CONTACT, FEMALE
CN301	1-561-150-00	PLUG HOUSING, 6P, FEMALE
	1-535-243-00	CONTACT, FEMALE
CN302,303	1-561-149-00	PLUG HOUSING, 5P, FEMALE
	1-535-243-00	CONTACT, FEMALE
CN304,305	1-561-150-00	PLUG HOUSING, 6P, FEMALE
	1-535-243-00	CONTACT, FEMALE
CN310	1-560-163-00	RECEPTACLE COAXIAL
CN311	1-561-150-00	PLUG HOUSING, 6P, FEMALE
	1-535-243-00	CONTACT, FEMALE
CN312,313	1-509-987-00	PLUG HOUSING, 6P, FEMALE
	1-509-982-00	CONTACT, FEMALE
CN314	1-509-984-00	PLUG HOUSING, 3P, FEMALE
	1-509-982-00	CONTACT, FEMALE
CN315	1-509-986-00	PLUG HOUSING, 5P, FEMALE
	1-509-982-00	CONTACT, FEMALE
CN316	1-561-056-00	PLUG HOUSING, 12P, FEMALE
	1-509-982-00	CONTACT, FEMALE
CN317	1-509-984-00	PLUG HOUSING, 3P, FEMALE
	1-509-982-00	CONTACT, FEMALE
CN318	1-561-147-00	PLUG HOUSING, 3P, FEMALE
	1-535-243-00	CONTACT, FEMALE
CN319,320	1-509-984-00	PLUG HOUSING, 3P, FEMALE
	1-509-982-00	CONTACT, FEMALE
CN321	1-509-585-00	PLUG HOUSING, 4P, FEMALE
	1-535-100-00	CONTACT, FEMALE
CN322	1-509-706-00	PLUG HOUSING, 3P, FEMALE
	1-535-100-00	CONTACT, FEMALE
CN324	1-509-704-00	PLUG HOUSING, 6P, FEMALE
	1-535-100-00	CONTACT, FEMALE
CN325	1-509-585-00	PLUG HOUSING, 4P, FEMALE
	1-535-100-00	CONTACT, FEMALE
CN326	1-509-706-00	PLUG HOUSING, 3P, FEMALE
	1-535-100-00	CONTACT, FEMALE
CN327	1-509-585-00	PLUG HOUSING, 4P, FEMALE
	1-535-100-00	CONTACT, FEMALE
CN328	1-509-706-00	PLUG HOUSING, 3P, FEMALE
	1-535-100-00	CONTACT, FEMALE
CN329	1-561-147-00	PLUG HOUSING, 3P, FEMALE
	1-535-243-00	CONTACT, FEMALE
CN331	1-561-149-00	PLUG HOUSING, 5P, FEMALE
	1-535-243-00	CONTACT, FEMALE
CN332	1-561-147-00	PLUG HOUSING, 3P, FEMALE
	1-535-243-00	CONTACT, FEMALE
CN333	1-561-150-00	PLUG HOUSING, 6P, FEMALE
	1-535-243-00	CONTACT, FEMALE

Ref. No.	Part No.	Description
CN334	1-561-147-00	PLUG HOUSING, 3P, FEMALE
	1-535-243-00	CONTACT, FEMALE
CN335	1-561-152-00	PLUG HOUSING, 10P, FEMALE
	1-535-243-00	CONTACT, FEMALE
CN336	1-561-147-00	PLUG HOUSING, 3P, FEMALE
	1-535-243-00	CONTACT, FEMALE
CN337	1-561-149-00	PLUG HOUSING, 5P, FEMALE
	1-535-243-00	CONTACT, FEMALE
CN338	1-561-147-00	PLUG HOUSING, 3P, FEMALE
	1-535-243-00	CONTACT, FEMALE
CN341	1-561-149-00	PLUG HOUSING, 5P, FEMALE
	1-535-243-00	CONTACT, FEMALE
CN342	1-561-147-00	PLUG HOUSING, 3P, FEMALE
	1-535-243-00	CONTACT, FEMALE
CN343	1-561-150-00	PLUG HOUSING, 6P, FEMALE
	1-535-243-00	CONTACT, FEMALE
CN344	1-561-147-00	PLUG HOUSING, 3P, FEMALE
	1-535-243-00	CONTACT, FEMALE
CN345,346	1-509-984-00	PLUG HOUSING, 3P, FEMALE
	1-509-982-00	CONTACT, FEMALE
CN347,348	1-509-986-00	PLUG HOUSING, 5P, FEMALE
	1-509-982-00	CONTACT, FEMALE
CN351,352	1-561-149-00	PLUG HOUSING, 5P, FEMALE
	1-535-243-00	CONTACT, FEMALE
CN353	1-561-152-00	PLUG HOUSING, 10P, FEMALE
	1-535-243-00	CONTACT, FEMALE
CN354,355	1-561-150-00	PLUG HOUSING, 6P, FEMALE
	1-535-243-00	CONTACT, FEMALE
CN356	1-509-987-00	PLUG HOUSING, 6P, FEMALE
	1-509-982-00	CONTACT, FEMALE
CN357	1-560-163-00	RECEPTACLE COAXIAL
CN361	1-509-705-00	PLUG HOUSING, 5P, FEMALE
	1-535-100-00	CONTACT, FEMALE
CN362	1-561-152-00	PLUG HOUSING, 10P, FEMALE
	1-535-243-00	CONTACT, FEMALE
CN363,364	1-561-150-00	PLUG HOUSING, 6P, FEMALE
	1-535-243-00	CONTACT, FEMALE
CN365	1-561-147-00	PLUG HOUSING, 3P, FEMALE
	1-535-243-00	CONTACT, FEMALE
CN366,367	1-509-706-00	PLUG HOUSING, 3P, FEMALE
368	1-535-100-00	CONTACT, FEMALE
CN369	1-561-150-00	PLUG HOUSING, 6P, FEMALE
	1-535-243-00	CONTACT, FEMALE
CN370,371	1-561-147-00	PLUG HOUSING, 3P, FEMALE
	1-535-243-00	CONTACT, FEMALE
CN381	1-561-150-00	PLUG HOUSING, 6P, FEMALE
	1-535-243-00	CONTACT, FEMALE
CN382	1-561-152-00	PLUG HOUSING, 10P, FEMALE
	1-535-243-00	CONTACT, FEMALE

Ref. No.	Part No.	Description
CN390	1-561-152-00	PLUG HOUSING, 10P, FEMALE
	1-535-243-00	CONTACT, FEMALE
CN391	1-561-149-00	PLUG HOUSING, 5P, FEMALE
	1-535-243-00	CONTACT, FEMALE
CN392,393	1-561-152-00	PLUG HOUSING, 10P, FEMALE
	1-535-243-00	CONTACT, FEMALE
CN394M	1-508-963-00	HOUSING, 45P
	1-508-958-00	CONTACT, MALE
CN394F	1-561-081-00	HOUSING, 45P
	1-561-066-00	CONTACT, FEMALE
CN395M	1-508-961-00	HOUSING, 16P
	1-508-958-00	CONTACT, MALE
CN395F	1-561-079-00	HOUSING, 16P
	1-561-066-00	CONTACT, FEMALE
CN396M,	1-508-959-00	HOUSING, 8P
397M	1-508-958-00	CONTACT, MALE
CN396F,	1-561-077-00	HOUSING, 8P
397F	1-561-066-00	CONTACT, FEMALE
CN398M	1-508-960-00	HOUSING, 12P
	1-508-958-00	CONTACT, MALE
CN398F	1-561-078-00	HOUSING, 12P
	1-561-066-00	CONTACT, FEMALE
CN399M	1-508-959-00	HOUSING, 8P
	1-508-958-00	CONTACT, MALE
CN399F	1-561-077-00	HOUSING, 8P
	1-561-066-00	CONTACT, FEMALE
⚠CN401M	1-561-070-00	PLUG HOUSING, 4P
	1-561-067-00	PLUG CONTACT
CN401F	1-561-084-00	PLUG HOUSING, 4P
	1-561-068-00	PLUG CONTACT
CN402M	1-508-962-00	HOUSING, 28P
	1-508-958-00	CONTACT, MALE
CN402F	1-561-080-00	HOUSING, 28P
	1-561-066-00	CONTACT, FEMALE
CN411,412	1-509-989-00	PLUG HOUSING, 10P, FEMALE
	1-509-982-00	CONTACT, FEMALE
CN413	1-509-988-00	PLUG HOUSING, 8P, FEMALE
	1-509-982-00	CONTACT, FEMALE
CN414,415	1-509-989-00	PLUG HOUSING, 10P, FEMALE
416	1-509-982-00	CONTACT, FEMALE
CN422	1-561-056-00	PLUG HOUSING, 12P, FEMALE
	1-509-982-00	CONTACT, FEMALE
CN425	1-561-149-00	PLUG HOUSING, 5P, FEMALE
	1-535-243-00	CONTACT, FEMALE
CN426	1-561-150-00	PLUG HOUSING, 6P, FEMALE
	1-535-243-00	CONTACT, FEMALE
CN451	1-509-989-00	PLUG HOUSING, 10P, FEMALE
	1-509-982-00	CONTACT, FEMALE
CN501M	1-508-963-00	HOUSING, 45P
	1-508-958-00	CONTACT, MALE

Ref. No.	Part No.	Description
CN501F	1-561-081-00	HOUSING, 45P
	1-561-066-00	CONTACT, FEMALE
CN502M, 503M	1-508-964-00	HOUSING, 60P
	1-508-958-00	CONTACT, MALE
CN502F, 503F	1-561-082-00	HOUSING, 60P
	1-561-066-00	CONTACT, FEMALE
CN504M	1-508-963-00	HOUSING, 45P
	1-508-958-00	CONTACT, MALE
CN504F	1-561-081-00	HOUSING, 45P
	1-561-066-00	CONTACT, FEMALE
CN505M	1-508-962-00	HOUSING, 28P
	1-508-958-00	CONTACT, MALE
CN505F	1-561-080-00	HOUSING, 28P
	1-561-066-00	CONTACT, FEMALE
CN506M, 507M	1-508-960-00	HOUSING, 12P
	1-508-958-00	CONTACT, MALE
CN506F, 507F	1-561-078-00	HOUSING, 12P
	1-561-066-00	CONTACT, FEMALE
CN508M	1-508-961-00	HOUSING, 16P
	1-508-958-00	CONTACT, MALE
CN508F	1-561-079-00	HOUSING, 16P
	1-561-066-00	CONTACT, FEMALE
CN419	1-931-106-00	RIBBON CABLE ASS'Y, 16-CKT
CN418 CN441	1-931-107-00	RIBBON CABLE ASS'Y, 16-CKT
CN410 CN431	1-931-108-00	RIBBON CABLE ASS'Y, 16-CKT
CN417 CN421	1-931-109-00	RIBBON CABLE ASS'Y, 16-CKT
CN424	1-931-111-00	RIBBON CABLE ASS'Y, 14-CKT
CN423 CN432	1-931-112-00	RIBBON CABLE ASS'Y, 16-CKT
(REF. NO. 70000 SERIES)		
CN21	1-509-987-00	PLUG HOUSING, 6P, FEMALE
	1-509-982-00	CONTACT, FEMALE
CN22	1-509-986-00	PLUG HOUSING, 5P, FEMALE
	1-509-982-00	CONTACT, FEMALE
CN23	1-509-988-00	PLUG HOUSING, 8P, FEMALE
	1-509-982-00	CONTACT, FEMALE
CN24	1-509-987-00	PLUG HOUSING, 6P, FEMALE
	1-509-982-00	CONTACT, FEMALE
CN25	1-509-984-00	PLUG HOUSING, 3P, FEMALE
	1-509-982-00	CONTACT, FEMALE
CN26	1-509-987-00	PLUG HOUSING, 6P, FEMALE
	1-509-982-00	CONTACT, FEMALE
CN27	1-509-984-00	PLUG HOUSING, 3P, FEMALE
	1-509-982-00	CONTACT, FEMALE
CN28	1-509-986-00	PLUG HOUSING, 5P, FEMALE
	1-509-982-00	CONTACT, FEMALE
CN29	1-509-984-00	PLUG HOUSING, 3P, FEMALE
	1-509-982-00	CONTACT, FEMALE
CN30	1-509-986-00	PLUG HOUSING, 5P, FEMALE
	1-509-982-00	CONTACT, FEMALE

Ref. No.	Part No.	Description
CN31,32	1-509-989-00	PLUG HOUSING, 10P, FEMALE
	1-509-982-00	CONTACT, FEMALE
CN33	1-509-984-00	PLUG HOUSING, 3P, FEMALE
	1-509-982-00	CONTACT, FEMALE
CN34	1-509-987-00	PLUG HOUSING, 6P, FEMALE
	1-509-982-00	CONTACT, FEMALE
CN35	1-509-986-00	PLUG HOUSING, 5P, FEMALE
	1-509-982-00	CONTACT, FEMALE
CN36	1-509-987-00	PLUG HOUSING, 6P, FEMALE
	1-509-982-00	CONTACT, FEMALE
CN37	1-509-989-00	PLUG HOUSING, 10P, FEMALE
	1-509-982-00	CONTACT, FEMALE
CN38	1-509-988-00	PLUG HOUSING, 8P, FEMALE
	1-509-982-00	CONTACT, FEMALE
CN39,40,41	1-561-056-00	PLUG HOUSING, 12P, FEMALE
	1-509-982-00	CONTACT, FEMALE
CN42	1-509-987-00	PLUG HOUSING, 6P, FEMALE
	1-509-982-00	CONTACT, FEMALE
CN43,44	1-561-056-00	PLUG HOUSING, 12P, FEMALE
	1-509-982-00	CONTACT, FEMALE
CN45,46	1-509-989-00	PLUG HOUSING, 10P, FEMALE
	1-509-982-00	CONTACT, FEMALE
CN47	1-509-984-00	PLUG HOUSING, 3P, FEMALE
	1-509-982-00	CONTACT, FEMALE
CN48	1-509-986-00	PLUG HOUSING, 5P, FEMALE
	1-509-982-00	CONTACT, FEMALE
CN49	1-509-988-00	PLUG HOUSING, 8P, FEMALE
	1-509-982-00	CONTACT, FEMALE
CN51	1-561-056-00	PLUG HOUSING, 12P, FEMALE
	1-509-982-00	CONTACT, FEMALE
CN52,54	1-509-986-00	PLUG HOUSING, 5P, FEMALE
	1-509-982-00	CONTACT, FEMALE
CN55	1-509-989-00	PLUG HOUSING, 10P, FEMALE
	1-509-982-00	CONTACT, FEMALE
CN56,57,58	1-509-984-00	PLUG HOUSING, 3P, FEMALE
	1-509-982-00	CONTACT, FEMALE
CN59,60	1-509-986-00	PLUG HOUSING, 5P, FEMALE
	1-509-982-00	CONTACT, FEMALE
CN61,62,63	1-509-984-00	PLUG HOUSING, 3P, FEMALE
	1-509-982-00	CONTACT, FEMALE
CN64	1-509-989-00	PLUG HOUSING, 10P, FEMALE
	1-509-982-00	CONTACT, FEMALE
CN65	1-561-056-00	PLUG HOUSING, 12P, FEMALE
	1-509-982-00	CONTACT, FEMALE
CN66,67	1-509-987-00	PLUG HOUSING, 6P, FEMALE
	1-509-982-00	CONTACT, FEMALE
CN68	1-509-986-00	PLUG HOUSING, 5P, FEMALE
	1-509-982-00	CONTACT, FEMALE
CN69	1-509-987-00	PLUG HOUSING, 6P, FEMALE
	1-509-982-00	CONTACT, FEMALE

Ref. No.	Part No.	Description
CN70,71	1-509-984-00	PLUG HOUSING, 3P, FEMALE
	1-509-982-00	CONTACT, FEMALE
CN72,73	1-509-987-00	PLUG HOUSING, 6P, FEMALE
	1-509-982-00	CONTACT, FEMALE
CN74	1-509-986-00	PLUG HOUSING, 5P, FEMALE
	1-509-982-00	CONTACT, FEMALE
CN75	1-509-984-00	PLUG HOUSING, 3P, FEMALE
	1-509-982-00	CONTACT, FEMALE
CN76	1-509-988-00	PLUG HOUSING, 8P, FEMALE
	1-509-982-00	CONTACT, FEMALE
CN77	1-509-984-00	PLUG HOUSING, 3P, FEMALE
	1-509-982-00	CONTACT, FEMALE
CN78	1-509-987-00	PLUG HOUSING, 6P, FEMALE
	1-509-982-00	CONTACT, FEMALE
CN79	1-509-989-00	PLUG HOUSING, 10P, FEMALE
	1-509-982-00	CONTACT, FEMALE
CN80	1-509-986-00	PLUG HOUSING, 5P, FEMALE
	1-509-982-00	CONTACT, FEMALE
CN81,82	1-509-984-00	PLUG HOUSING, 3P, FEMALE
	1-509-982-00	CONTACT, FEMALE
CN83	1-509-988-00	PLUG HOUSING, 8P, FEMALE
	1-509-982-00	CONTACT, FEMALE
CN84	1-509-986-00	PLUG HOUSING, 5P, FEMALE
	1-509-982-00	CONTACT, FEMALE
CN85	1-509-984-00	PLUG HOUSING, 3P, FEMALE
	1-509-982-00	CONTACT, FEMALE
CN86	1-561-056-00	PLUG HOUSING, 12P, FEMALE
	1-509-982-00	CONTACT, FEMALE
CN87	1-509-989-00	PLUG HOUSING, 10P, FEMALE
	1-509-982-00	CONTACT, FEMALE
CN88	1-509-988-00	PLUG HOUSING, 8P, FEMALE
	1-509-982-00	CONTACT, FEMALE
CN89	1-509-987-00	PLUG HOUSING, 6P, FEMALE
	1-509-982-00	CONTACT, FEMALE
CN90	1-561-056-00	PLUG HOUSING, 12P, FEMALE
	1-509-982-00	CONTACT, FEMALE
CN91	1-509-989-00	PLUG HOUSING, 10P, FEMALE
	1-509-982-00	CONTACT, FEMALE
CN92	1-509-987-00	PLUG HOUSING, 6P, FEMALE
	1-509-982-00	CONTACT, FEMALE
CN93,94	1-560-163-00	RECEPTACLE COAXIAL

D1	**8-719-300-51**	**DIODE, SG-5TR**
D2	**8-719-300-50**	**DIODE, SG-5TS**

⚠F1	**1-532-203-00**	**FUSE, 2A/250V (PS)**
F1	**1-532-455-XX**	**FUSE, 2A/250V (JAPAN)**
F1	**1-532-578-00**	**FUSE, 2A/250V (U/C, PM)**

Ref. No.	Part No.	Description
H1	**8-825-737-00**	**HEAD, AUDIO/CTL R/P (EXCEPT PS-A4)**
H1	**8-825-737-50**	**HEAD, AUDIO/CTL R/P (FOR PS-A4)**
H2	**A-6036-033-A**	**HEAD ASS'Y, AUDIO ERASE (EXCEPT PS-A4)**
H2	**A-6033-034-A**	**HEAD ASS'Y, AUDIO ERASE (FOR PS-A4)**
H3	**8-828-957-00**	**HEAD, FULL ERASE**
IC1	**8-719-411-02**	**IC, ON1102SF; SEARCH DIAL**
IC2	**8-719-411-02**	**IC, ON1102SF; SEARCH DIAL**
IC3	**8-719-411-02**	**IC, ON1102SF; COUNTER RST**
IC4	**8-719-447-82**	**IC, ON1106SO; S-REEL**
IC6	**8-719-447-82**	**IC, ON1106SO; T-REEL**
IC7	**8-719-447-82**	**IC, ON1106SO; TIMER-A**
IC8	**8-719-447-82**	**IC, ON1106SO; TIMER-B**
IC9	**8-719-411-02**	**IC, ON1102SF; END SENSOR**
M1	**8-839-015-21**	**MOTOR, TENSION**
M2	**8-839-015-21**	**MOTOR, CAPSTAN**
M4	**A-6037-003-A**	**MOTOR ASS'Y, T-REEL**
M5	**A-6037-002-A**	**MOTOR ASS'Y, S-REEL**
M6	**1-541-121-00**	**MOTOR, FAN**
M7	**1-541-122-00**	**MOTOR, FAN**
M8	**1-541-122-00**	**MOTOR, FAN**
ME1,2,3	**1-520-401-00**	**METER, AUDIO (NTSC)**
ME1,2,3	**1-520-228-00**	**METER, AUDIO (PS, PM)**
ME4	**1-520-289-00**	**METER, VIDEO/RF**
PL1,2,3,4	**1-518-412-00**	**LAMP, 6.3V/70mA (FOR ME1 ~ ME4)**
PM1	**1-454-127-00**	**SOLENOID, TENSION PINCH**
PM2	**1-454-127-00**	**SOLENOID, CAPSTAN PINCH**
PM3	**1-454-125-00**	**SOLENOID, S-REEL BRAKE**
PM4	**1-454-125-00**	**SOLENOID, T-REEL BRAKE**
PM5	**1-454-185-21**	**SOLENOID, IMPEDANCE ROLLER**
Q1,2,3,4, 5,6,7	**8-729-311-62**	**TRANSISTOR, 2SC1116**
Q8,9	**8-729-311-42**	**TRANSISTOR, 2SC1114**
Q10,11,12 13	**8-729-311-62**	**TRANSISTOR, 2SC1116**
Q14	**8-729-311-42**	**TRANSISTOR, 2SC1114**

Ref. No.	Part No.	Description
R1,2,3,4, 5,6	1-224-690-XX	RES, VAR, CARBON, 5K
R7	1-224-584-00	RES, VAR, CARBON, 10K
R8	1-224-959-00	RES, VAR, CARBON SLIDE, 500
R9,10	1-246-446-00	RES, CARBON 75 1/4W 5%
R21	1-224-955-00	RES, VAR WITH SW 100K
RY1,2	1-515-280-00	RELAY, THERMAL, 80°C
S1,4	1-552-078-00	SWITCH, SLIDE
⚠S5	1-552-060-00	SWITCH, ROCKER (POWER)
S30,31,32, 33	1-552-078-00	SWITCH, SLIDE
⚠T1	1-446-880-00	TRANSFORMER, POWER
T2	A-6043-003-A	TRANSFORMER ASS'Y, TENSION DET
T5,6,7,8	1-427-348-00	TRANSFORMER, AUDIO LINE OUT
TM1	1-548-903-00	HEAD HOURS METER

Ref. No.	Part No.	Description
FIXTURE (OPTIONAL)		
	J-6040-070-A	ECCENTRIC SCREWDRIVER
	J-6040-160-A	FLAT PLATE
	J-6040-320-A	TENSION ALIGNMENT SET
	J-6040-460-A	TAPERED SCREW
	J-6040-750-B	DRUM ECCENTRICITY GAUGE
	J-6041-630-A	TENSION SCALE, 200 gr
	J-6041-640-A	TENSION SCALE, 5 kg
	J-6041-650-A	TENSION ARM BENDING TOOL
	J-6041-670-A	THICKNESS GAUGE
	J-6041-700-A	ALLEN WRENCHES
	7-732-050-10	SECTOR TENSION GAUGE, 20 gr
	7-741-100-01	WEIGHT, 200 gr
	8-944-005-02	ALIGNMENT TAPE, BR5-2 (NTSC)
	8-944-005-12	ALIGNMENT TAPE, BR5-2PM (PM)
	8-944-005-62	ALIGNMENT TAPE, BR5-2PS-A4 (PS)
	STANDARD PRODUCT	DEMAGNETIZER, SONY, HE-2 or HE-3

PACKING MATERIAL & SUPPLIED ACCESSORY

A-6001-001-A	EXTENSION BOARD ASS'Y
3-651-759-00	SPACER, CARTON
3-659-289-00	LID, CARTON
3-659-295-00	FRAME, CARTON
3-659-296-00	CUSHION, FRONT
3-659-297-00	CUSHION, REAR
3-659-298-00	CUSHION, UPPER
3-659-299-00	CARTON, BOTTOM
3-651-767-00	**BAG, POLY**
3-701-632-00	**BAG, POLY**
1-551-411-11	**CORD, POWER (JAPAN)**
⚠**1-551-812-00**	**CORD, POWER (U/C, PM)**
1-551-852-00	**CORD, POWER (PS)**
8-882-003-03	**EMPTY REEL, R1-10V**

CHANGED PARTS

UP TO #20099			#20101 & UP	
BIAS BOARD				
C12, 26, 40	1-131-406-00	CAP, TANTALUM 0.47 35V	1-123-379-00	CAP, ELECT 0.47 100V
CAPSTAN-A BOARD				
C6	1-108-608-00	CAP, MYLAR 0.15 50V 5%	DELETED (WITH AUDIO-4 ONLY)	
IC46, 56	8-759-240-69	IC, TC4069UBP, CMOS (CD4069UBE; RCA)	8-759-045-84	IC, MC14584BCP, CMOS; MOTOROLA
R112	1-246-465-00	RES, CARBON 20 1/4W 5%	DELETED	
R113	1-246-471-00	RES, CARBON 20 1/4W 5%	DELETED	
R114	NOT IN USE		1-246-481-00	RES, CARBON 220 1/4W 5%
DEMOD BOARD				
C201	1-109-628-00	CAP, MICA 160PF 2% 500V	DELETED	
IC201	8-759-902-21	IC, SN74LS221N, TTL; TI	DELETED	
R100, 101	1-246-455-00	RES, CARBON 180 1/4W 5%	1-214-114-00	RES, METAL 180 1/4W 1%
R102	1-246-497-00	RES, CARBON 10K 1/4W 5%	1-214-156-00	RES, METAL 10K 1/4W 1%
R103	1-246-506-00	RES, CARBON 24K 1/4W 5%	1-214-165-00	RES, METAL 24K 1/4W 1%
R104, 105, 106	1-246-457-00	RES, CARBON 220 1/4W 5%	1-214-116-00	RES, METAL 220 1/4W 1%
R108	1-246-464-00	RES, CARBON 430 1/4W 5%	1-214-123-00	RES, METAL 430 1/4W 1%
R110, 114	1-246-469-00	RES, CARBON 680 1/4W 5%	1-214-128-00	RES, METAL 680 1/4W 1%
R117, 118	1-246-481-00	RES, CARBON 2200 1/4W 5%	1-214-140-00	RES, METAL 2200 1/4W 1%
R119	1-246-468-00	RES, CARBON 620 1/4W 5%	1-214-127-00	RES, METAL 620 1/4W 1%
R121	1-246-449-00	RES, CARBON 100 1/4W 5%	1-214-108-00	RES, METAL 100 1/4W 1%
R127	1-246-505-00	RES, CARBON 22K 1/4W 5%	1-214-164-00	RES, METAL 22K 1/4W 1%
R129	1-246-501-00	RES, CARBON 15K 1/4W 5%	1-214-160-00	RES, METAL 15K 1/4W 1%
R130, 131	1-246-497-00	RES, CARBON 10K 1/4W 5%	1-214-156-00	RES, METAL 10K 1/4W 1%
R135	1-246-463-00	RES, CARBON 390 1/4W 5%	1-246-470-00	RES, CARBON 750 1/4W 5%
R159	1-246-433-00	RES, CARBON 22 1/4W 5%	1-214-092-00	RES, METAL 22 1/4W 1%
R160	1-246-455-00	RES, CARBON 180 1/4W 5%	1-214-114-00	RES, METAL 180 1/4W 1%
R162	1-246-460-00	RES, CARBON 300 1/4W 5%	1-214-119-00	RES, METAL 300 1/4W 1%
R165	1-246-468-00	RES, CARBON 620 1/4W 5%	1-214-127-00	RES, METAL 620 1/4W 1%
R166	1-246-459-00	RES, CARBON 270 1/4W 5%	1-214-118-00	RES, METAL 270 1/4W 1%
R169	1-246-476-00	RES, CARBON 1300 1/4W 5%	1-214-135-00	RES, METAL 1300 1/4W 1%
R171	1-246-483-00	RES, CARBON 2700 1/4W 5%	1-214-142-00	RES, METAL 2700 1/4W 1%
R172	1-246-449-00	RES, CARBON 100 1/4W 5%	1-214-108-00	RES, METAL 100 1/4W 1%
R173	1-246-487-00	RES, CARBON 3900 1/4W 5%	1-214-146-00	RES, METAL 3900 1/4W 1%
R174	1-246-447-00	RES, CARBON 82 1/4W 5%	1-214-106-00	RES, METAL 82 1/4W 1%
R175	1-246-492-00	RES, CARBON 6200 1/4W 5%	1-214-151-00	RES, METAL 6200 1/4W 1%
R187	1-246-442-00	RES, CARBON 51 1/4W 5%	1-214-101-00	RES, METAL 51 1/4W 1%
R188, 189, 190	1-246-446-00	RES, CARBON 75 1/4W 5%	1-214-105-00	RES, METAL 75 1/4W 1%
R196	1-246-469-00	RES, CARBON 680 1/4W 5%	1-214-128-00	RES, METAL 680 1/4W 1%
R201	1-214-168-00	RES, METAL 33K 1/4W 1%	DELETED	
R202	1-214-150-00	RES, METAL 5600 1/4W 1%	DELETED	
R207	1-246-477-00	RES, CARBON 1500 1/4W 5%	1-214-136-00	RES, METAL 1500 1/4W 1%
R208	1-246-468-00	RES, CARBON 620 1/4W 5%	1-214-127-00	RES, METAL 620 1/4W 1%
DRUM BOARD				
IC31	8-759-901-23	IC SN74LS123N, TTL; TI	8-759-991-23	IC SN74LS123NS, TTL; TI

(CONTINUED)

UP TO #20099			#20101 & UP	
MOD BOARD				
C3	1-123-332-00	CAP, ELECT 47 25V	DELETED	
C206	NOT IN USE		1-123-330-00	CAP, ELECT 22 25V
C207	NOT IN USE		1-123-332-00	CAP, ELECT 47 25V
R1	1-246-442-00	RES, CARBON 51 1/4W 5%	1-214-101-00	RES, METAL 51 1/4W 1%
R6	1-246-473-00	RES, CARBON 1K 1/4W 5%	1-214-132-00	RES, METAL 1K 1/4W 1%
R8	1-246-485-00	RES, CARBON 3300 1/4W 5%	1-214-144-00	RES, METAL 3300 1/4W 1%
R12	1-246-452-00	RES, CARBON 130 1/4W 5%	1-214-111-00	RES, METAL 130 1/4W 1%
R33	1-246-488-00	RES, CARBON 4300 1/4W 5%	1-214-147-00	RES, METAL 4300 1/4W 1%
R36	1-246-460-00	RES, CARBON 300 1/4W 5%	1-214-119-00	RES, METAL 300 1/4W 1%
R37	1-246-461-00	RES, CARBON 330 1/4W 5%	1-214-120-00	RES, METAL 330 1/4W 1%
R40	1-246-475-00	RES, CARBON 1200 1/4W 5%	1-214-134-00	RES, METAL 1200 1/4W 1%
R43	1-246-472-00	RES, CARBON 910 1/4W 5%	1-214-131-00	RES, METAL 910 1/4W 1%
R44	1-246-486-00	RES, CARBON 3600 1/4W 5%	1-214-145-00	RES, METAL 3600 1/4W 1%
R62	1-246-480-00	RES, CARBON 2K 1/4W 5%	1-214-139-00	RES, METAL 2K 1/4W 1%
R64, 65	1-246-477-00	RES, CARBON 1500 1/4W 5%	1-214-136-00	RES, METAL 1500 1/4W 1%
R67	1-246-507-00	RES, CARBON 27K 1/4W 5%	1-214-166-00	RES, METAL 27K 1/4W 1%
R69	1-246-485-00	RES, CARBON 3300 1/4W 5%	1-214-144-00	RES, METAL 3300 1/4W 1%
R147	1-246-457-00	RES, CARBON 220 1/4W 5%	1-214-116-00	RES, METAL 220 1/4W 1%
R148	1-246-472-00	RES, CARBON 910 1/4W 5%	1-214-131-00	RES, METAL 910 1/4W 1%
R149	1-246-486-00	RES, CARBON 3600 1/4W 5%	1-214-145-00	RES, METAL 3600 1/4W 1%
R150	1-246-484-00	RES, CARBON 3K 1/4W 5%	1-214-143-00	RES, METAL 3K 1/4W 1%
R151	1-246-519-00	RES, CARBON 82K 1/4W 5%	1-214-178-00	RES, METAL 82K 1/4W 1%
R152	1-246-425-00	RES, CARBON 10 1/4W 5%	1-214-084-00	RES, METAL 10 1/4W 1%
R154	1-246-461-00	RES, CARBON 330 1/4W 5%	1-214-120-00	RES, METAL 330 1/4W 1%
R188	1-246-513-00	RES, CARBON 47K 1/4W 5%	1-214-172-00	RES, METAL 47K 1/4W 1%
R189	NOT IN USE		1-214-125-00	RES, METAL 510 1/4W 1%
R190	NOT IN USE		1-214-180-00	RES, METAL 100K 1/4W 1%
R200	1-246-465-00	RES, CARBON 470 1/4W 5%	1-214-124-00	RES, METAL 470 1/4W 1%
R203	1-246-492-00	RES, CARBON 6200 1/4W 5%	1-214-151-00	RES, METAL 6200 1/4W 1%
REEL-1A BOARD				
R43	1-214-150-00	RES, METAL 5600 1/4W 1%	1-214-147-00	RES, METAL 4300 1/4W 1%
R46	1-214-153-00	RES, METAL 7500 1/4W 1%	1-214-154-00	RES, METAL 8200 1/4W 1%
REEL-2A BOARD				
R100, 102	1-214-174-00	RES, METAL 56K 1/4W 1%	1-214-144-00	RES, METAL 3300 1/4W 1%
R103, 104	1-214-180-00	RES, METAL 100K 1/4W 1%	1-214-147-00	RES, METAL 4300 1/4W 1%
REEL-AUX-A BOARD				
CP1, 2, 3, 4	1-101-534-00	CR PACK	DELETED	
RY1, 8, 11, 13	1-515-389-00	RELAY, D2W5002	1-515-390-00	RELAY, D2N202BD
REG-1A BOARD				
D10	8-719-815-55	DIODE, 1S1555	8-719-200-02	DIODE, 10E2
SYS-3A BOARD				
IC44	8-759-900-00	IC, SN74LS00N, TTL; TI	8-759-901-32	IC, SN74LS132N, TTL; TI
R78	1-246-494-00	RES, CARBON 200 1/4W 5%	DELETED	
R79	1-246-456-00	RES, CARBON 7500 1/4W 5%	DELETED	

(CONTINUED)

UP TO #20099			#20101 & UP	
SYS SW-1 BOARD				
IC4, 42	8-759-901-23	IC SN74LS123N, TTL; TI	8-759-991-23	IC SN74LS123NS, TTL; TI
SYS SW-2A BOARD				
C4	1-131-406-00	CAP, TANTALUM 0.47 35V	1-131-407-00	CAP, TANTALUM 0.68 35V
IC3, 6, 7, 9, 34, 45	8-759-901-23	IC SN74LS123N, TTL; TI	8-759-991-23	IC SN74LS123NS, TTL; TI
SYS SW-3A BOARD				
IC3, 30, 42, 58	8-759-901-23	IC SN74LS123N, TTL; TI	8-759-991-23	IC SN74LS123NS, TTL; TI
SYS SW-5 BOARD				
C3	1-108-571-00	CAP, MYLAR 0.0047 50V 5%	1-108-573-00	CAP, MYLAR 0.0056 50V 5%
R9	1-214-180-00	RES, METAL 100K 1/4W 1%	1-214-179-00	RES, METAL 91K 1/4W 1%
TAPE TIMER-A BOARD				
IC3, 48, 49, 50	8-759-901-23	IC SN74LS123N, TTL; TI	8-759-991-23	IC SN74LS123NS, TTL; TI
TENSION-A BOARD				
C39	1-109-547-00	CAP, MICA 330PF 100V 5%	1-109-559-00	CAP, MICA 820PF 100V 5%
IC34, 35	8-759-240-69	IC, TC4069UBP, C-MOS (CD4069UBE; RCA)	8-759-045-84	IC, MC14584BCP, C-MOS; MOTOROLA
R82	1-214-162-00	RES, METAL 18K 1/4W 1%	1-214-142-00	RES, METAL 2700 1/4W 1%
R137	1-246-456-00	RES, CARBON 200 1/4W 5%	DELETED	
R138	1-246-471-00	RES, CARBON 820 1/4W 5%	DELETED	
R140	NOT IN USE		1-246-481-00	RES, CARBON 2200 1/4W 5%
TP14	2-252-662-00	TERMINAL, TP	DELETED	
VIDEO LOGIC BOARD				
IC7	8-759-901-23	IC SN74LS123N, TTL; TI	8-759-991-23	IC SN74LS123NS, TTL; TI

UP TO #20199			# 20201 & UP	
CAPSTAN-A BOARD				
R47	1-214-168-00	RES, METAL 33K 1/4W 1%	1-214-170-00	RES, METAL 39K 1/4W 1%
MPA-A BOARD				
R58, 59	NOT IN USE		1-213-155-00	RES, METAL 10K 1W 5%
REC AMP BOARD				
C103	1-108-591-00	CAP, MYLAR 0.033 50V 5%	1-108-597-00	CAP, MYLAR 0.056 50V 5%
R189	1-246-473-00	RES, CARBON 1K 1/4W 5%	1-246-463-00	RES, CARBON 390 1/4W 5%
R190	1-246-497-00	RES, CARBON 10K 1/4W 5%	1-246-489-00	RES, CARBON 4700 1/4W 5%
R191	1-246-521-00	RES, CARBON 100K 1/4W 5%	1-246-512-00	RES, CARBON 43K 1/4W 5%
REEL AUX-A BOARD				
R24, 25	NOT IN USE		1-214-100-00	RES, METAL 47 1/4W 1%
REEL-1A BOARD				
C2	1-131-349-00	CAP, TANTALUM 2.2 35V 10%	1-131-348-00	CAP, TANTALUM 1.5 35V 10%
C86	NOT IN USE		1-131-366-00	CAP, TANTALUM 15 20V
C88	NOT IN USE		1-108-591-00	CAP, MYLAR 0.033 50V 5%
C89, 90	NOT IN USE		1-102-108-00	CAP, CERAMIC 150PF 50V 10%
C92	NOT IN USE		1-131-403-00	CAP, TANTALUM 1.5 35V 10%
D18	8-759-911-19	DIODE, 1SS119	DELETED	
D21	NOT IN USE		8-759-911-19	DIODE, 1SS119
D23	NOT IN USE		8-719-911-19	DIODE, 1SS119
D24	NOT IN USE		8-719-911-19	DIODE, 1SS119
D25	NOT IN USE		8-719-911-19	DIODE, 1SS119
IC23	8-759-753-30	IC, MB7052-R3CA, P-ROM; FUJITSU	8-759-753-57	IC, MB7053-R3CB, P-ROM, FUJITSU
R123	1-214-180-00	RES, METAL 100K 1/4W 1%	1-214-177-00	RES, METAL 75K 1/4W 1%
R134	1-246-521-00	RES, CARBON 100K 1/4W 5%	1-214-180-00	RES, METAL 100K 1/4W 1%
R137	NOT IN USE		1-246-545-00	RES, CARBON 1M 1/4W 5%
R138, 139	NOT IN USE		1-214-180-00	RES, METAL 100K 1/4W 1%
R142	NOT IN USE		1-246-545-00	RES, CARBON 1M 1/4W 5%
R143	NOT IN USE		1-246-473-00	RES, CARBON 1K 1/4W 5%

(CONTINUED)

UP TO # 20199

REEL-2A BOARD

C42	1-108-575-00	CAP, MYLAR 0.0068 50V 5%
C45	1-108-591-00	CAP, MYLAR 0.033 50V 5%
C99	NOT IN USE	
IC26	8-759-245-20	IC, TC4520BP, C-MOS (MC14520BCP, MOTOROLA)
Q6	NOT IN USE	
R46	1-214-084-00	RES, METAL 10 1/4W 1%
R60	1-214-180-00	RES, METAL 100K 1/4W 1%
R64	1-246-531-00	RES, CARBON 270K 1/4W 5%
R65	1-214-176-00	RES, METAL 68K 1/4W 1%
R70	1-214-180-00	RES, METAL 100K 1/4W 1%
R73	1-214-180-00	RES, METAL 100K 1/4W 1%
R79, 80	1-214-148-00	RES, METAL 4700 1/4W 1%
R83	1-214-161-00	RES, METAL 16K 1/4W 1%
R84	1-214-169-00	RES, METAL 36K 1/4W 1%
R85	1-214-178-00	RES, METAL 82K 1/4W 1%
R86	1-246-529-00	RES, CARBON 220K 1/4W 5%
R180	1-214-142-00	RES, METAL 2700 1/4W 1%
R184	NOT IN USE	
R185	NOT IN USE	
R186	NOT IN USE	
R187	1-246-469-00	RES, CARBON 680 1/4W 5%
R188	NOT IN USE	
R189	NOT IN USE	
RB1	NOT IN USE	
RV3	1-224-941-00	RES, VAR, METAL 20K
RV4	1-224-941-00	RES, VAR, METAL 20K

SYS SW-2A BOARD

C22	1-108-585-00	CAP, MYLAR 0.018 50V 5%
C29, 47	1-131-240-00	CAP, TANTALUM 47 16V
C63	NOT IN USE	
C101	1-123-330-00	CAP, ELECT 22 25V
IC57	NOT IN USED	
Q6	8-761-622-00	TRANSISTOR, 2SC1636
Q11, 12, 13	8-724-375-01	TRANSISTOR, 2SC403C
R37	1-224-941-00	RES, VAR, METAL 20K
R38	1-246-510-00	RES, CARBON 36K 1/4W 5%
R39	1-246-473-00	RES, CARBON 1K 1/4W 5%
R75, 76, 77	1-214-120-00	RES, METAL 330 1/4W 1%
R78, 79, 80	1-246-489-00	RES, CARBON 4700 1/4W 5%
R85	NOT IN USE	

SYS SW-3A BOARD

C15, 16	1-131-381-00	CAP, TANTALUM 47 10V
R31	NOT IN USE	

#20201 & UP

1-108-582-00	CAP, MYLAR 0.0013 50V 5%
1-108-599-00	CAP, MYLAR 0.068 50V 5%
1-123-330-00	CAP, ELECT 22 25V
DELETED	
8-729-663-47	TRANSISTOR 2SC1364
DELETED	
1-214-176-00	RES, METAL 68K 1/4W 1%
1-246-537-00	RES, CARBON 470K 1/4W 5%
1-214-180-00	RES, METAL 100K 1/4W 1%
1-214-156-00	RES, METAL 10K 1/4W 1%
1-214-179-00	RES, METAL 91K 1/4W 1%
DELETED	
1-214-153-00	RES, METAL 7500 1/4W 1%
1-214-162-00	RES, METAL 18K 1/4W 1%
1-214-170-00	RES, METAL 39K 1/4W 1%
1-246-522-00	RES, CARBON 110K 1/4W 5%
DELETED	
1-214-176-00	RES, METAL 68K 1/4W 1%
1-214-180-00	RES, METAL 100K 1/4W 1%
1-214-162-00	RES, METAL 18K 1/4W 1%
1-214-128-00	RES, METAL 680 1/4W 1%
1-214-156-00	RES, METAL 10K 1/4W 1%
1-214-180-00	RES, METAL 100K 1/4W 1%
1-231-525-00	RESISTOR BLOCK 4.7K x 4
1-224-942-00	RES, VAR, METAL 50K
1-224-938-00	RES, VAR, METAL 2K

1-108-587-00	CAP, MYLAR 0.022 50V 5%
1-123-332-00	CAP, ELECT 47 25V
1-161-034-00	CAP, CERAMIC 0.022 25V 20%
DELETED	
8-759-045-84	IC, MC14584BCP, C-MOS; MOTOROLA
DELETED	
DELETED	
1-224-943-00	RES, VAR, METAL 100K
1-246-513-00	RES, CARBON 47K 1/4W 5%
1-246-537-00	RES, CARBON 470K 1/4W 5%
DELETED	
DELETED	
1-231-525-00	RESISTOR BLOCK 4700 x 4

1-123-332-00	CAP, ELECT 47 25V
1-246-425-00	RES, CARBON 10 1/4W 5%

UP TO #20299			#20301 & UP	
REEL-1A BOARD				
C91	1-107-081-00	CAP, MICA 68PF 50V 5%	DELETED	
IC38, 39	8-759-901-93	IC, SN74LS193N, TTL; TI	8-759-221-93	IC, TC40H193P, C-MOS; TOSHIBA
REG-2 BOARD				
R60	NOT IN USE		1-206-648-00	RES, METAL 220 2W 5%

UP TO #20399			#20401 & UP	
AUDIO LOGIC BOARD				
IC1 ~ 5 IC9 ~ 13	8-759-971-64	IC MM74C164N, C-MOS; NSC	8-759-221-64	IC TC40H164, C-MOS; TOSHIBA
CAPSTAN-A BOARD				
R104	1-246-505-00	RES, CARBON 22K 1/4W 5%	DELETED	
DT-1 BOARD				
C9	NOT IN USE		1-131-403-00	CAP, TANTALUM 0.15 35V
C14	NOT IN USE		1-108-583-00	CAP, MYLAR 0.015 50V 5%
C19	1-131-403-00	CAP, TANTALUM 0.15 35V	1-108-599-00	CAP, MYLAR 0.068 50V 5%
C42	NOT IN USE		1-131-359-00	CAP, TANTALUM 10 25V
IC49	NOT IN USE		8-759-991-23	IC SN74LS123NS, TTL; TI
R10	NOT IN USE		1-214-164-00	RES, METAL 22K 1/4W 1%
R19	1-214-160-11	RES, METAL 15K 1/4W 1%	1-246-537-00	RES, CARBON 470K 1/4W 5%
R59	NOT IN USE		1-214-139-00	RES, METAL 2K 1/4W 1%
R60, 61	NOT IN USE		1-214-180-00	RES, METAL 100K 1/4W 1%
SW1	NOT IN USE		1-552-101-00	SWITCH, SLIDE
FRAMING-A BOARD				
C53, 54	1-123-307-00	CAP, ELECT 100 10V	1-123-333-00	CAP, ELECT 100 25V
C78	NOT IN USE		1-108-603-00	CAP, MYLAR 0.1 50V 5%
C79	NOT IN USE		1-131-407-00	CAP, TANTALUM 0.68 35V
C80	NOT IN USE		1-131-408-00	CAP, TANTALUM 1 35V
D8, 9	NOT IN USE		8-719-700-25	DIODE, 1S1925PS
IC18, 19, 25	8-759-994-74	IC MM74C74N, C-MOS; NSC	8-759-220-74	IC TC40H074P, C-MOS; TOSHIBA
IC35	8-759-900-00	IC SN74LS00N, TTL; TI	8-759-045-38	IC MC14538BCP, C-MOS; MOTOROLA
IC36	NOT IN USE		8-759-910-32	IC SN74S32N, TTL; TI
IC37	NOT IN USE		8-759-900-00	IC SN74LS00N, TTL; TI
IC38	NOT IN USE		8-759-900-08	IC SN74LS08N, TTL; TI
IC39	NOT NI USE		8-759-900-10	IC SN74LS10N, TTL; TI
R45	1-246-473-00	RES, CARBON 1K 1/4W 5%	DELETED	
R86, 87	1-246-497-00	RES, CARBON 10K 1/4W 5%	1-246-473-00	RES, CARBON 1K 1/4W 5%
R106	NOT IN USE		1-246-441-00	RES, CARBON 47 1/4W 5%
R108	NOT IN USE		1-246-489-00	RES, CARBON 4700 1/4W 5%
R109	NOT IN USE		1-246-542-00	RES, CARBON 750K 1/4W 5%
R110	NOT IN USE		1-246-535-00	RES, CARBON 390K 1/4W 5%
R112	NOT IN USE		1-246-441-00	RES, CARBON 47 1/4W 5%
R113	NOT IN USE		1-246-473-00	RES, CARBON 1K 1/4W 5%
R114	NOT IN USE		1-224-943-00	RES, VAR, METAL 100K
R115	NOT IN USE		1-246-441-00	RES, CARBON 47 1/4W 5%
MOD BOARD				
E1 ~ 6 E8 ~ 10	3-109-906-00	TERMINAL, TP	2-252-662-11	TERMINAL, TP

(CONTINUED)

UP TO #20399			#20401 & UP	
REEL-1A BOARD				
IC1, 3, 5, 6, 7, 8, 10, 16	8-759-990-82	IC TL082CP; TI	8-759-145-58	IC μPC4558C(RC4558; RAYTHEON)
TP9	NOT IN USE		2-252-662-00	TERMINAL, TP
REEL-2A BOARD				
IC20, 21, 30, 31, 32, 43, 44, 46	8-759-990-82	IC TL082CP; TI	8-759-145-58	IC μPC4558C (RC4558; RAYTHEON)
SYNC PULSE BOARD				
C15	1-107-083-00	CAP, MICA 82PF 50V 5%	DELETED	
C16	1-107-091-00	CAP, MICA 180PF 50V 5%	DELETED	
C17	1-107-083-00	CAP, MICA 82PF 50V 5%	DELETED	
C18	1-108-579-00	CAP, MYLAR 0.01 50V 5%	DELETED	
C22	1-109-695-00	CAP, MICA 820PF 500V 2%	1-109-559-00	CAP, MICA 820PF 100V 5%
C49	1-123-306-00	CAP, ELECT 47 10V	1-123-332-00	CAP, ELECT 47 25V
C67, 68, 69	1-123-307-00	CAP, ELECT 100 10V	1-123-333-00	CAP, ELECT 100 25V
C77, 78, 79, 80, 81	1-123-306-00	CAP, ELECT 47 10V	1-123-332-00	CAP, ELECT 47 25V
CF1	NOT IN USE		1-527-497-00	FILTER, CERAMIC
E1, 2, 3	3-109-906-00	TERMINAL, TP	2-252-662-11	TERMINAL, TP
L1, 2	1-407-173-XX	INDUCTOR, MICRO 220 5%	DELETED	
L3	1-409-309-00	COIL, TOROIDAL	1-409-339-00	COIL, TOROIDAL
R25	1-246-494-00	RES, CARBON 7500 1/4W 5%	1-214-147-00	RES, METAL 4300 1/4W 1%
R26	1-246-501-00	RES, CARBON 15K 1/4W 5%	1-214-154-00	RES, METAL 8200 1/4W 1%
R30	1-246-477-00	RES, CARBON 1500 1/4W 5%	DELETED	
R31	1-246-477-00	RES, CARBON 1500 1/4W 5%	1246-473-00	RES, CARBON 1K 1/4W 5%
R32	1-246-481-00	RES, CARBON 2200 1/4W 5%	1-246-484-00	RES, CARBON 3K 1/4W 5%
R34	1-224-938-00	RES, VAR, METAL 2K	DELETED	
R39	1-246-441-00	RES, CARBON 47 1/4W 5%	DELETED	
TP3, 5, 6, 7	NOT IN USE		2-252-662-00	TERMINAL, TP
SYS-3A BOARD				
IC25	8-759-900-75	IC SN74LS75N, TTL; TI	8-759-903-75	IC SN74LS375N, TTL; TI
R22, 23	1-246-449-00	RES, CARBON 100 1/4W 5%	1-246-461-00	RES, CARBON 330 1/4W 5%
TENSION-A BOARD				
C89, 90	1-123-307-00	CAP, ELECT 100 10V	1-123-333-00	CAP, ELECT 100 25V
C93, 94, 95, 96, 97	1-123-306-00	CAP, ELECT 47 10V	1-123-332-00	CAP, ELECT 47 25V
R139	NOT IN USE		1-246-497-00	RES, CARBON 10K 1/4W 5%
TP2, 20, 21, 22, 23	NOT IN USE		2-252-662-00	TERMINAL, TP
VIDEO LOGIC BOARD				
C47	1-161-036-00	CAP, CERAMIC 0.047 25V 20%	1-123-306-00	CAP, ELECT 47 10V
C49	1-102-074-00	CAP, CERAMIC 0.001 50V 10%	DELETED	
IC48	NOT IN USE		8-759-900-74	IC SN74LS74AN, TTL; TI
L1	1-409-309-00	COIL, TOROIDAL	1-409-339-00	COIL, TOROIDAL
R51, 54	1-246-489-00	RES, CARBON 4700 1/4W 5%	DELETED	
R55	NOT IN USE		1-246-485-00	RES, CARBON 3300 1/4W 5%
R56	1-246-461-00	RES, CARBON 330 1/4W 5%	DELETED	

	UP TO #20499		#20501 & UP	
REEL-2A BOARD				
R62	1-214-180-00	RES, METAL 100K 1/4W 1%	1-214-179-00	RES, METAL 91K 1/4W 1%
RF SW BOARD				
C42	1-131-408-00	CAP, TANTALUM 1 35V	DELETED	
C49	1-131-372-00	CAP, TANTALUM 15 16V	DELETED	
C50	NOT IN USE		1-131-352-00	CAP, TANTALUM 6.8 35V
D5	8-719-709-25	DIODE 1S1925P	DELETED	
R59	1-214-156-00	RES, METAL 10K 1/4W 1%	1-214-159-00	RES, METAL 13K 1/4W 1%
R60	1-214-150-00	RES, METAL 5600 1/4W 1%	1-214-148-00	RES, METAL 4.7K 1/4W 1%
R79	1-214-119-00	RES, METAL 300Ω 1/4W 1%	1-214-130-00	RES, METAL 820 1/4W 1%
R81	NOT IN USE		1-214-144-00	RES, METAL 3.3K 1/4W 1%
SUB CONTROL BOARD				
TP1	NOT IN USE		2-252-662-00	TERMINAL, TP
TENSION-A BOARD				
C31	1-108-571-00	CAP, MYLAR 0.0047 5% 50V	DELETED	
R66, 67	1-214-143-00	RES, METAL 3K 1/4W 1%	DELETED	

UP TO #20599			#20601 & UP	
SYS-1 BOARD				
C42	1-107-073-00	CAP, MICA 33PF 50V 5%	1-107-159-00	CAP, MICA 33PF 500V 5%
C57	1-108-377-00	CAP, MYLAR 0.01 100V 10%	1-108-579-00	CAP, MYLAR 0.01 50V 5%
E1	3-109-906-00	TERMINAL, TP	2-252-662-11	TERMINAL, TP
E2, 3	3-109-906-00	TERMINAL, TP	DELETED	
L1	1-409-309-00	COIL, TOROIDAL	1-409-339-00	COIL, TOROIDAL